Test report EB-25_534

Title: eGFZ 9275-C2-T05 PulsatorTest B005

The drive & control company

Date	:	27.10.2025 – 29.10.2025
Location	:	ETV (Do2)
Specimen	:	eGFZ 9275 C2
Material-No.	:	R988154977
Serial-No.	:	---

Test Order-No.:	EA-25_534_eGFZ_9275_C2_T05_Pulsator_Test_B005
Test Report-No.:	EB–25_534_1.1

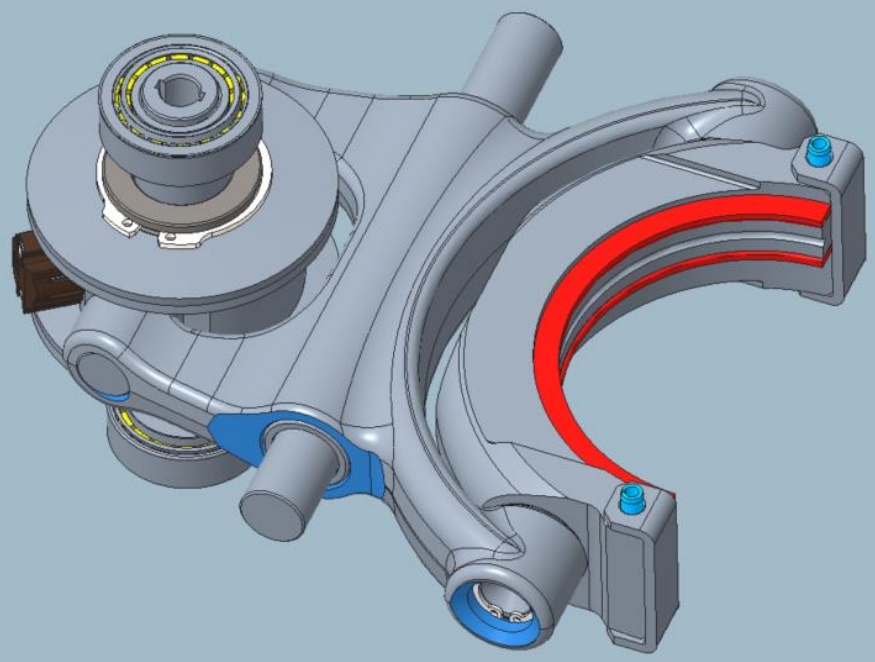

© Bosch Rexroth AG 2024

Valid edition only in SOCOS. Any kind of copies are not subject to the change service.

Index

1 Abstract EB-25_534 3
1.1 Introduction 3
1.2 Target 3
1.3 Results 3
1.4 Conclusion 3
1.5 Recommendations and activities 3
2 Details 4
2.1 Visual inspection at delivery 4
2.2 Test Setup & procedure 4
2.3 Measurement equipment 4
2.4 Results 5
3 Appendix A 8
3.1 Appendix A1 - Drawings 8
3.2 Appendix A2 – Parts list 9

DC-MO/ETV Testing transmission units	DC-MO/ETV Manager testing transmission units	DC-MO/NE-GT Manager development transmission units
Dominik_Oelkers Digitally signed by Dominik_Oelkers Date: 2025.12.01 11:31:01 +01'00'		
Mr. Oelkers	Mr. Wolf	Dr. Lamparski

1 Abstract EB-25_534

1.1 Introduction

The test was conducted as a release test to achieve quality goal 3 for the shifting-system mechanics in eGFZ9275 C2. Design changes were made to the C2 prototype (shifting fork, pins for sliding element carrier) after initial testing of the C1 prototype with 6Mio cycles.

1.2 Target

The objective of this test is to determine that the mechanics of the shifting system can withstand at least 2.5 million actuations without damage. The test scope comprises 5 million gearshifts.

1.3 Results

No.	Result	Rating	
1	Broken snap ring after 141.660 cycles	☐ ok	☒ not ok

1.4 Conclusion

A snap ring (Pos. 506) in the eGFZ 9275 system fractured after 141.660 load cycles at 10 kN and a repetition frequency of 5Hz during the fatigue test. The root cause analysis revealed a significantly reduced load capacity (static capacity F_{stat} = 9378 N, dynamic capacity $F_{(R=0)}$ = 3517 N) of the snap ring compared to initial assumptions (static capacity F_{stat} = 59158 N, dynamic capacity $F_{(R=0)}$ = 22184 N). This reduction is primarily attributed to a larger effective force application point distance (approx. 2.0 mm instead of an assumed 0.254 mm) on the snap ring. This increased distance is caused by the stamped contour of the disc spring, which shifts the actual load point further outwards, away from the groove base. The groove specifications on the drawing and the snap ring's catalogue specifications themselves are compliant, indicating that the issue is related to the interaction between the disc spring's geometry and the snap ring's load distribution.

1.5 Recommendations and activities

No.	Recommendations	Activities	Resp.	Due
1	Implement design modification	Check different design changes to ensure that the snap ring withstand loads	Matalla	CW 49/25
2	Carry out new test	Carry out fatigue test with improved design	Matalla Oelkers	CW 06/26

Recommendations / activities have been agreed with the initiator / project leader. The project leader is responsible to follow up the activities

2 Details

2.1 Visual inspection at delivery

Specimen			Remark:
without	☒ ok	☐ not ok	

Table 1: visual inspection

2.2 Test Setup & procedure

Assembly B005 was mounted in a test fixture that provided the interface to a hydraulic fatigue test bench, as illustrated in fig. 1. The control fork shall be cyclically loaded on the spindle side with an alternating force of 10 kN at a test frequency of 5 Hz. A total of 2.5 million load cycles shall be performed (this corresponds to 5 million gearshift).

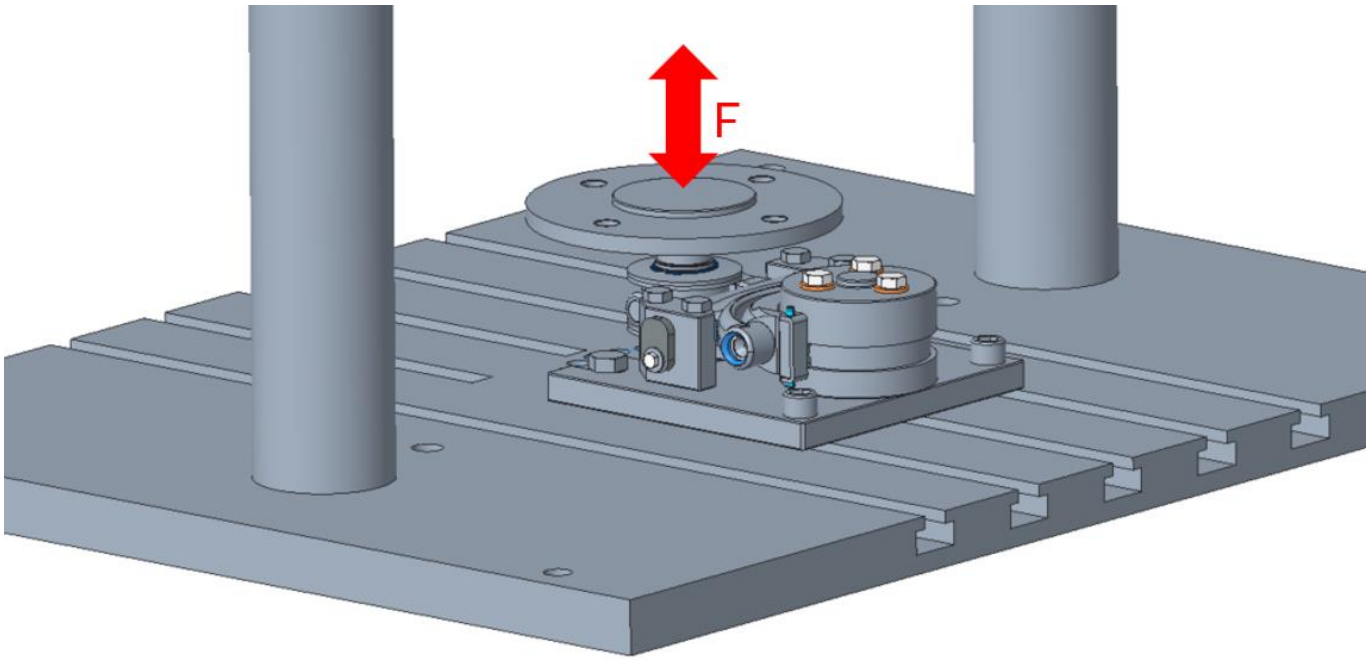

Figure 1: Text bench

2.3 Measurement equipment

Measured value	Description	Sensor type	Sensor no.	Calibrated til
Force	Force of machine	1032-BJR-250kN	524869	11/27
Displacement	Displ. of machine	LVDT	226358	11/27

Table 2: Used measurement equipment

2.4 Results

After 137.140 cycles, a decrease in displacement coupled with a temporary increase in force was observed. The force very quickly returned to its setpoint of 10kN. Since the machine's limit was set based on the displacement behavior, the test continued until the displacement changed so much that the limit was exceeded and the machine aborted the test at 141.660 cycles. See marked area in fig. 2.

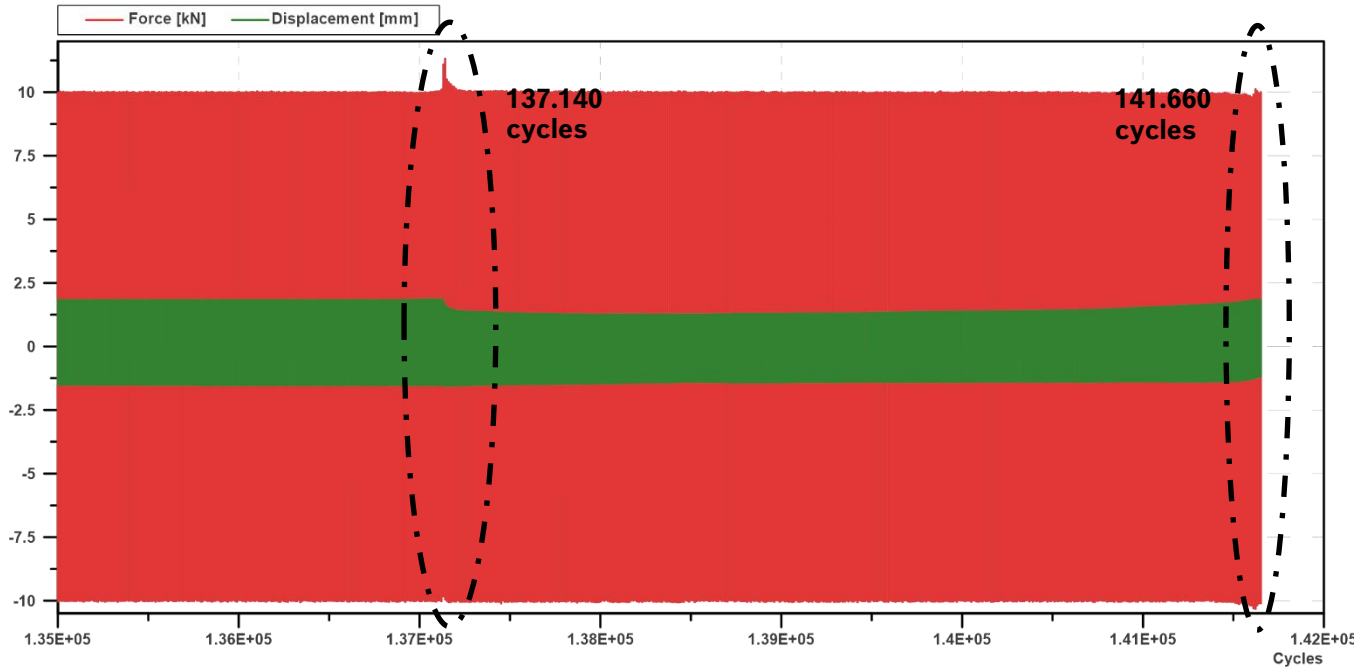

Figure 2: Force/Displacement Diagram

During inspection of the specimen, fine abrasion was observed on the spindle side, see fig. 2. Consequently, the test fixture was disassembled and examined for damaged components.
The moving parts within the gearbox are located in the oil sump and are therefore permanently lubricated. The wear observed on the test bench is due to insufficient lubrication.

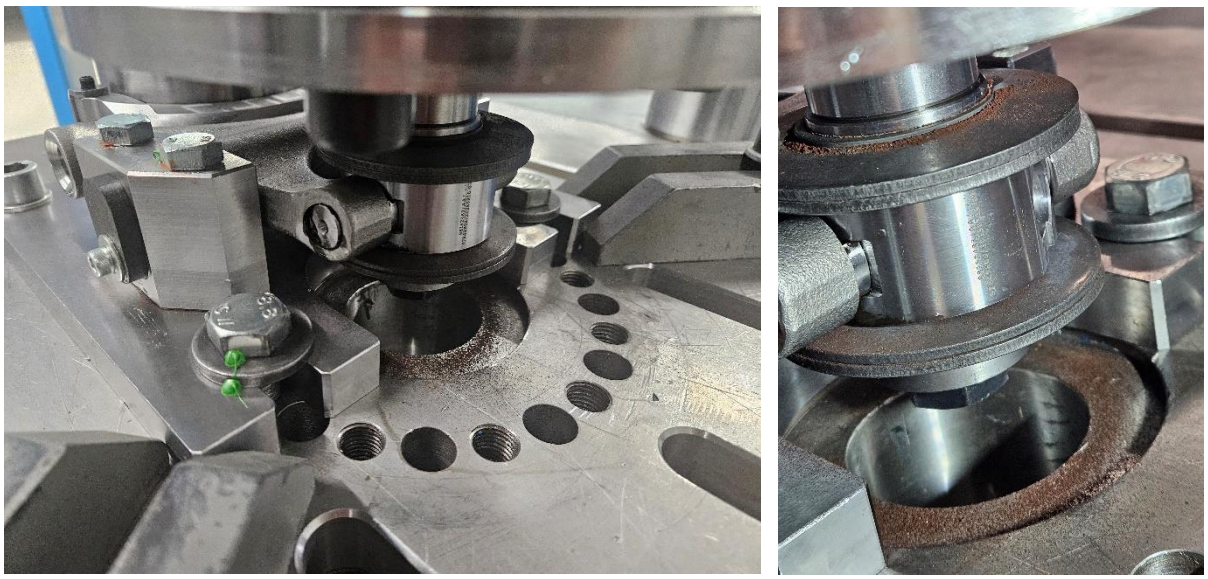

Figure 3: Iron abrasion spindle side

During inspection of the tested parts, it was determined that a snap ring (Pos. 506) in the eGFZ 9275 system fractured after 141.660 load cycles, see fig. 4.

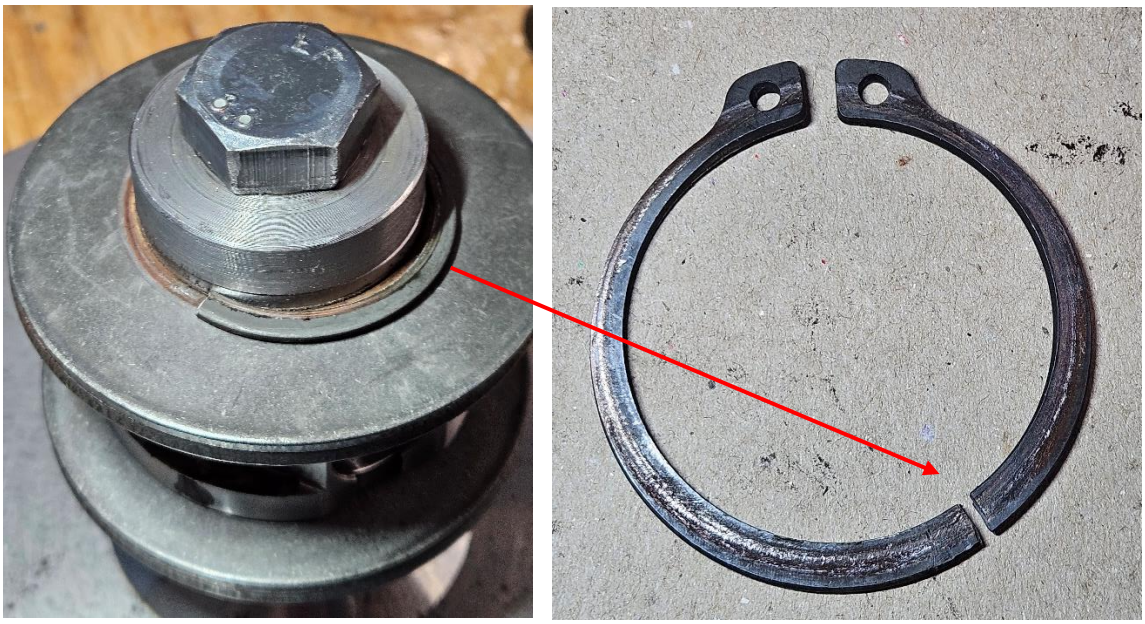

Figure 4: Broken snap ring

The root cause analysis revealed a significantly reduced load capacity (static capacity F_{stat} = 9378 N, dynamic capacity $F_{(R=0)}$ = 3517 N) of the snap ring compared to initial assumptions (static capacity F_{stat} = 59158 N, dynamic capacity $F_{(R=0)}$ = 22184 N). This reduction is primarily attributed to a larger effective force application point distance (approx. 2.0 mm instead of an assumed 0.254 mm) on the snap ring, see fig. 5. This increased distance is caused by the stamped contour of the disc spring, which shifts the actual load point further outwards, away from the groove base.

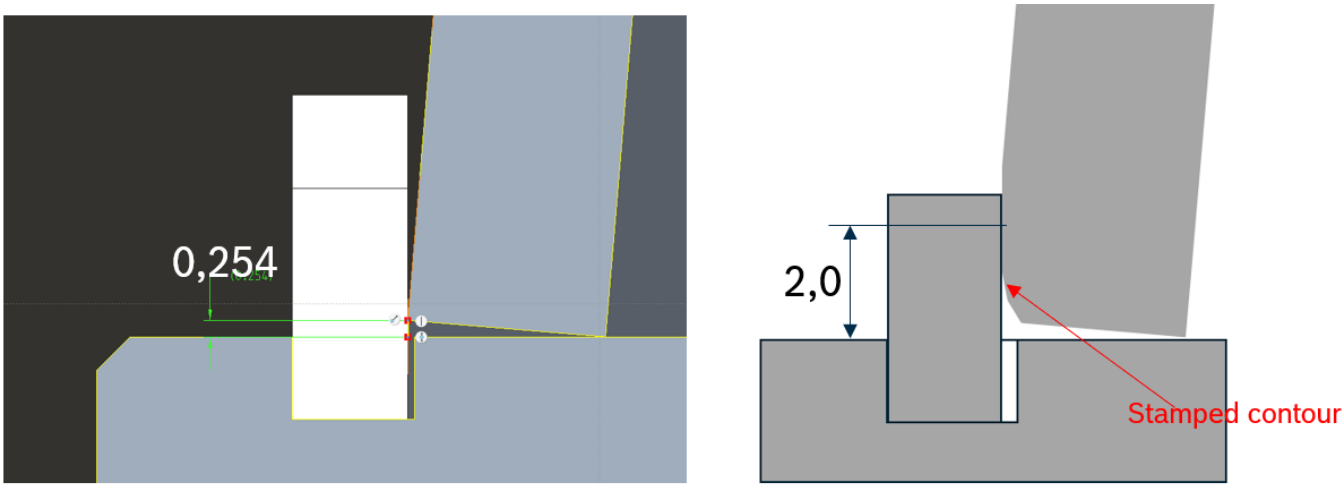

Figure 5: Reduced load capacity of snap ring

The groove specifications on the drawing and the snap ring's catalogue specifications themselves are compliant, indicating that the issue is related to the interaction between the disc spring's geometry and the snap ring's load distribution. Therefore, different design solutions were figured out to solve this problem. The design solution to be implemented and evaluated in a subsequent test is shown in fig. 6. This involves the integration of a shoulder functioning as an end stop, along with a washer and a reinforced snap ring. As a result, the ball screw required a 3 mm extension.

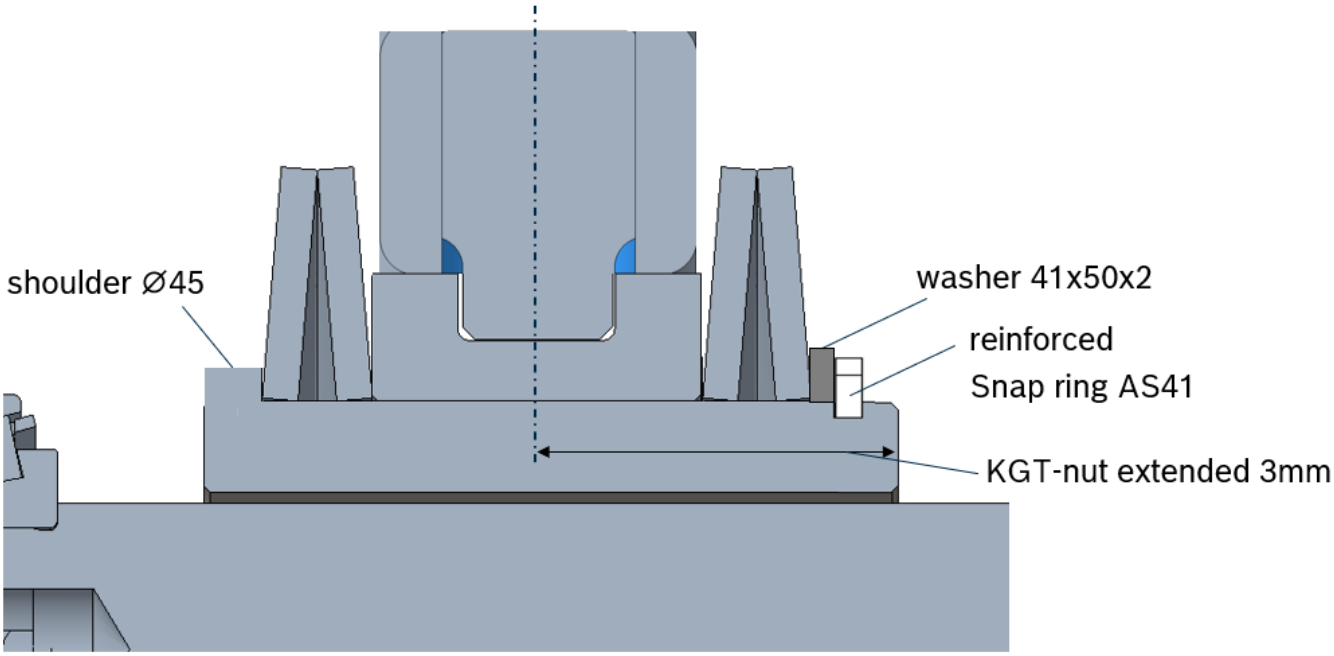

Figure 6: Improved design of spindle side

3 Appendix A

3.1 Appendix A1 - Drawings

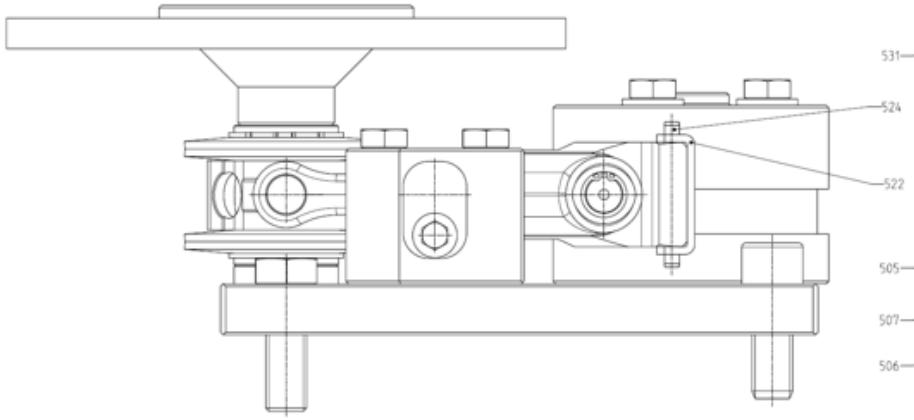

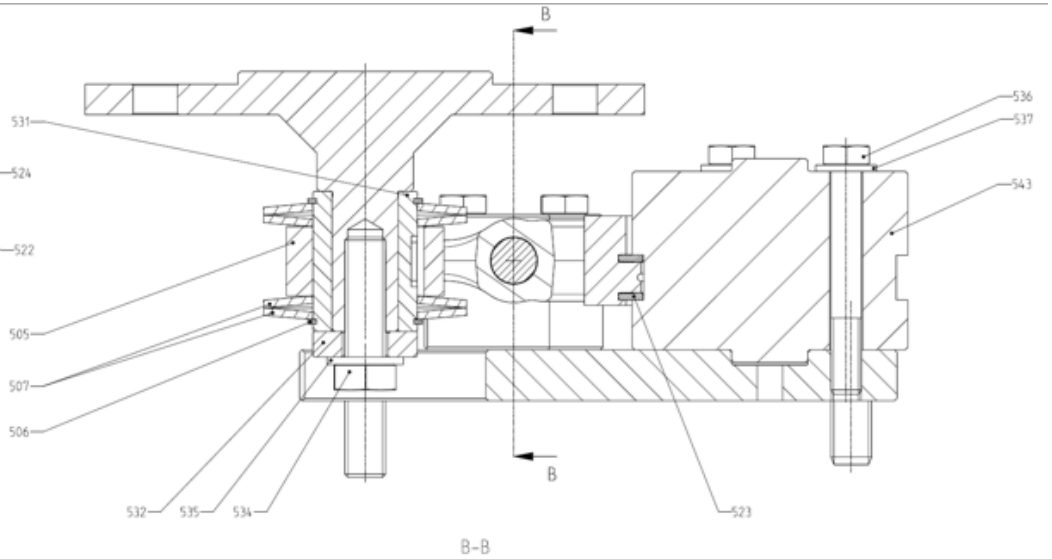

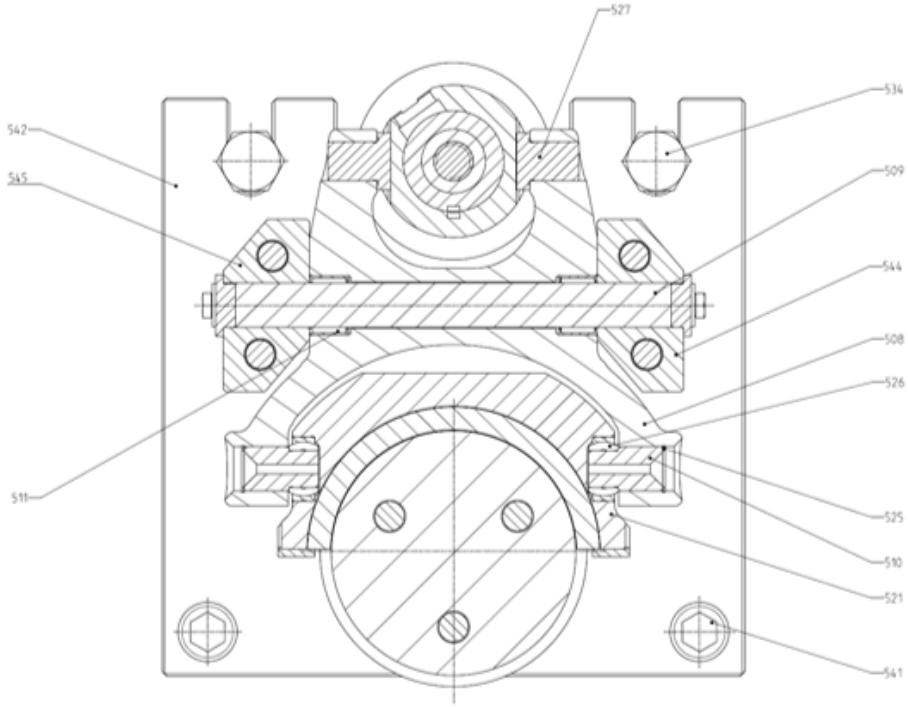

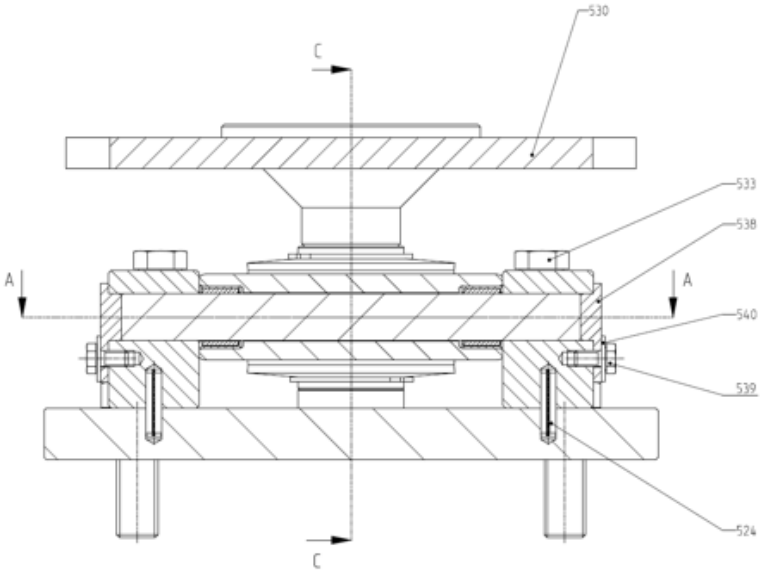

3.2 Appendix A2 – Parts list

	Baugruppe		RB14513650	RB14980533	
Pos	**Bezeichnung**	**Material Nr.**	**3D Modell**	**2D Zeichnung**	**Anzahl**
E505	SPACER SLEEVE EGFZ 9275 für PAL-Sensor	R988152483	RB13588365	RB13588366	1
E506	RETAINING RING A 41	R913084199			2
E507	DISC SPRING 80X41X3 L0= 5,3	R913045204			4
E508	CONTROL FORK EGFZ 9275 (i 0,88)	R988152476	RB11921047	RB11944485	1
E509	BOLT EGFZ 9275 (lang)	R988152477	RB11832782	RB11832783	1
E510	BOLT EGFZ 9275	R988152479	RB11832369	RB11832370	2
E511	NEEDLE BUSH HN 1816	R913082961			2
E518	PARALLEL KEY DIN6885-A5X5X20	R900006712			1
E521	SPACER SLEEVE EGFZ 9275 (ohne Schieber V1)	R988153058	RB11661639	RB11951882	1
E522	ANGLE PLATE EGFZ 9275	R988152480	RB11889519	RB13031705	2
E523	FRICTION WASHER EGFZ 9275 (Guss) V1	R988152482	RB12962010	RB12962011	2
E524	ISO 8752 6x26	R913034024			6
E525	RETAINING RING DIN472-18X1	R916452092			2
E526	SPH. PLAIN BEARING GE15-DO DIN ISO 12240-1 E	R913104331			2
E527	Bolt (Spindel)	R988154189	RB12630674	RB12630764	2
E530	Flansch	R988130349	RA94944910	RA94951840	1
E531	Sleeve	R988130346	RA94905823	RA95078577	1
E532	Sleeve	R988130350	RA94950949	RA95078208	1
E533	ISO 4014_M12x65		2911010919		4
E534	ISO 4017_M16x50				3
E535	Washer_M16_30x17x3		RA95597912		1
E536	ISO 4014_M12x90	R987037700			3
E537	Washer M12 ISO7091	R913027990			3
E538	3D print spacer		RB14622157		2
E539	ISO 4014 M6x16	R987038091			2
E540	Washer M6		RB14687126		2
E541	ISO 4762 M16x45	R9103079590			2
E542	Baseplate	R988157371	RB14513638	RB14594409	1
E543	Bolt	R988157370	RB14515537	RB14688945	1
E544	Sidepart right	R988157369	RB14513565	RB14689555	1
E545	Sidepart left	R988157368	RB14514186	RB14690094	1