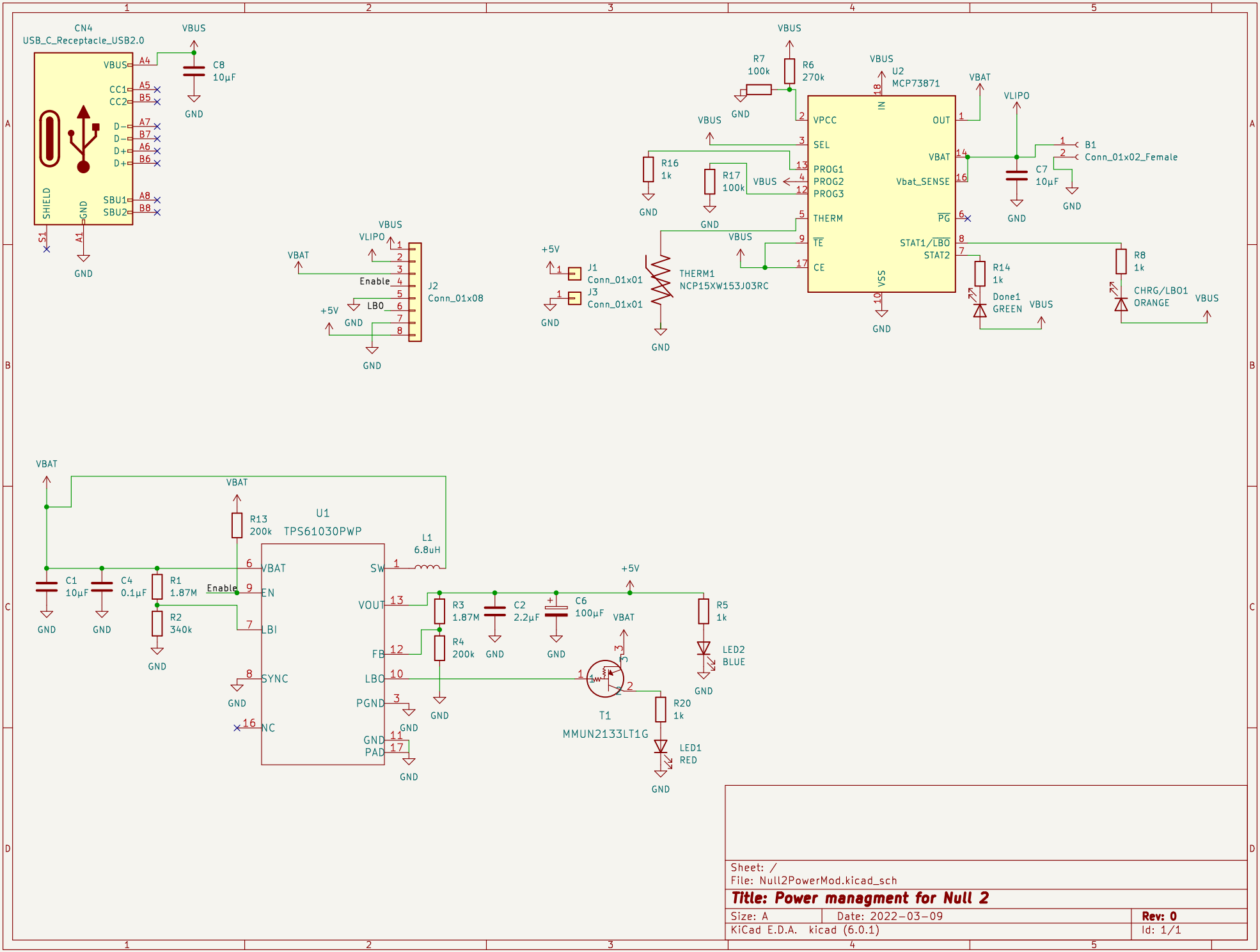

Sheet: /
File: Null2PowerMod.kicad_sch

Title: Power managment for Null 2

Size: A	Date: 2022-03-09	Rev: 0
KiCad E.D.A. kicad (6.0.1)		Id: 1/1