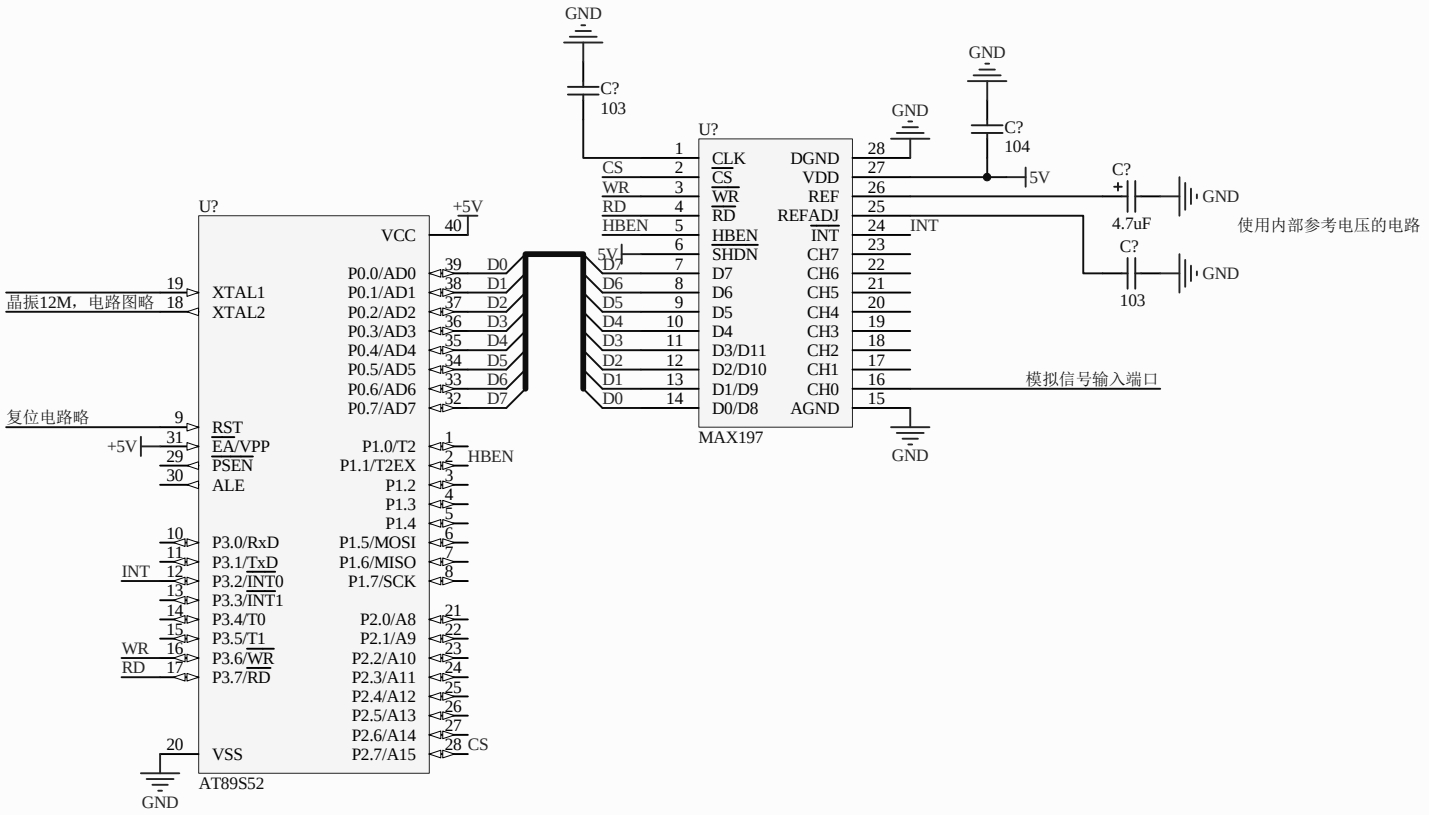

Title		
Size A4	Number	Revision
Date: 2013/9/13 星期五		Sheet of
File: E:\PCB_Study\Study_01.SchDoc		Drawn By: