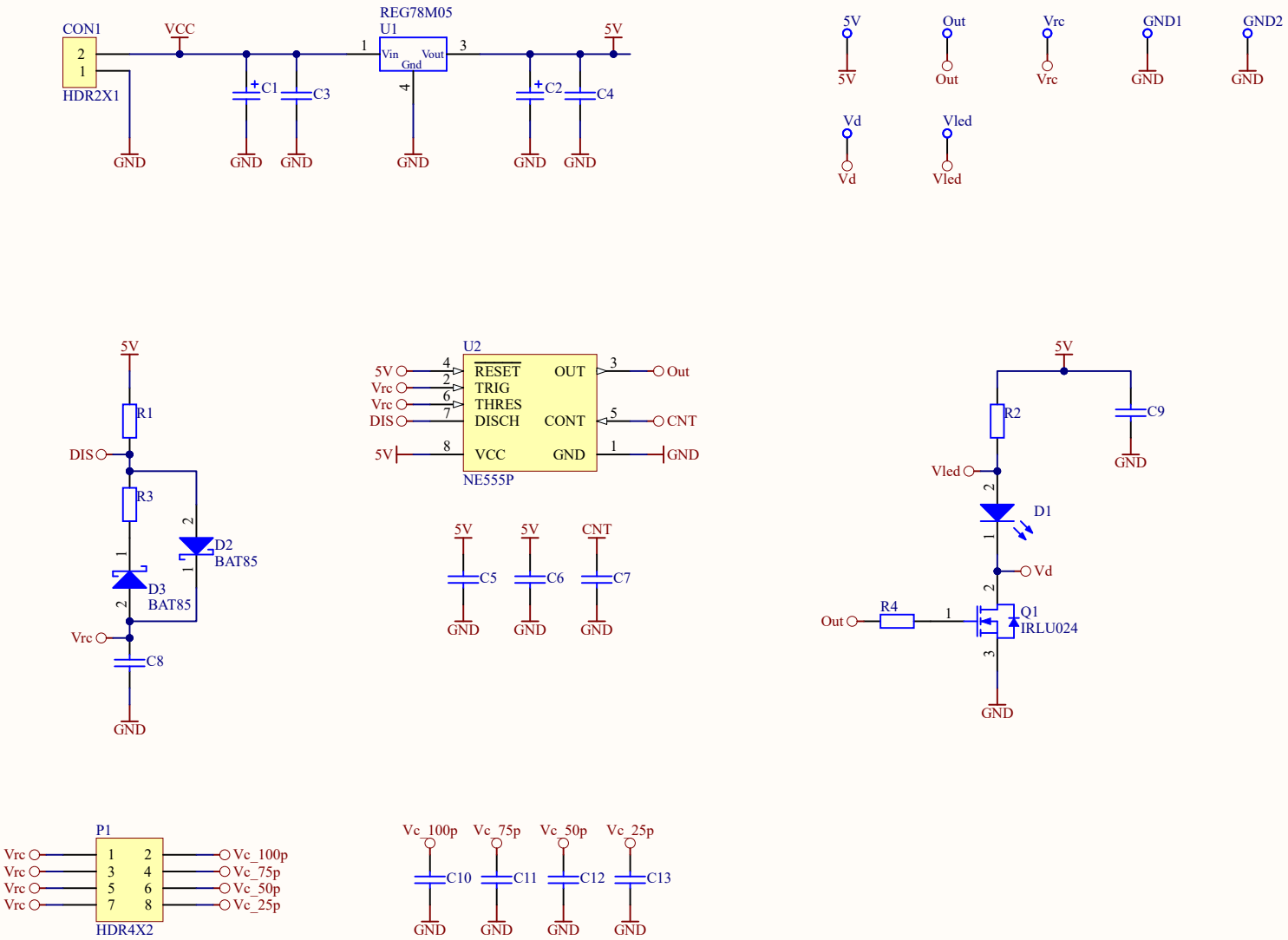

Title: ***NE555 Based IR Transmitter***		*Power Electronics Group*
Author: Duleepa J Thrimawithana	Revision: 1R0	*The University of Auckland*
Date: 7/04/2026 Time: 2:39:01 pm	Sheet 1 of 1	*20 Symonds Street*
File: C:\Users\kburd\Downloads\NE555_Transmitter\Tx_555_Sch.SchDoc		*Auckland 1010*
		New Zealand