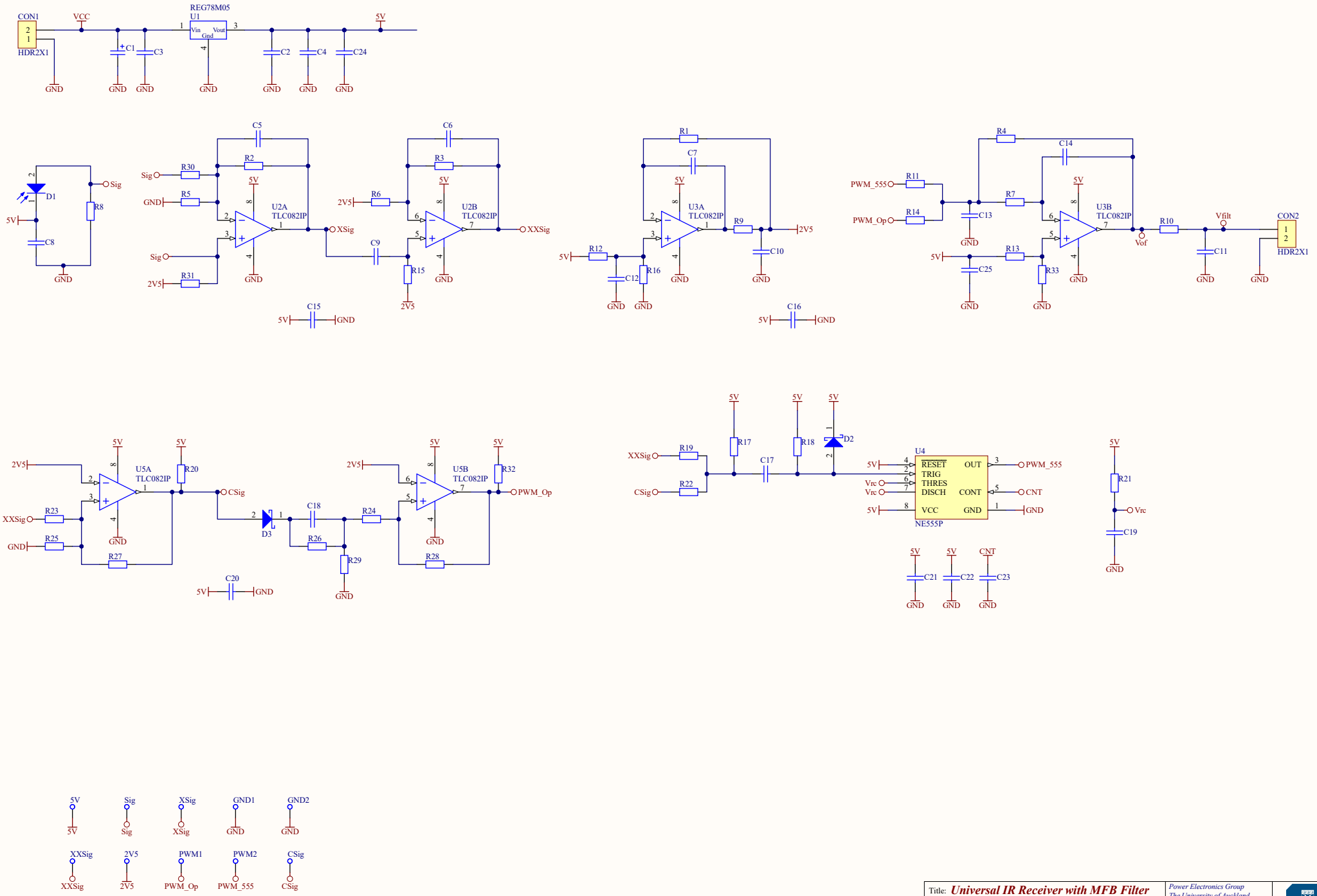

Title:	***Universal IR Receiver with MFB Filter***
Author:	Duleepa J Thrimawithana
Revision:	1R0
Date:	18/04/2026
Time:	11:56:06 am
Sheet	1 of 1
File:	Rx_Universal_Schematic.SchDoc

Power Electronics Group
The University of Auckland
20 Symonds Street
Auckland 1010
New Zealand