FPGA Implementation for the Linking of Cell Tracks Using New Structure Algorithm

Mohammad Javeed, Fathima Jabeen

Abstract— In microscopy images automatically tracking of living cells is an important and challenging problem. So this paper will concentrate on global tracking algorithm, which links cell outlines generated by a segmentation algorithm into tracks. This is attained eventually finding those tracks which provide for the biggest can be allowed to build with probabilistic persuaded scoring function, utilizing another structure calculation. This paper provided for the vitality about advanced image transforming and the noteworthiness for their usage ahead FPGAs should accomplish exceptional performance, this fills in addresses of the execution of image transforming calculations in average filter, morphological, convolution furthermore smoothing operation and then edge identification on FPGA utilizing VHDL language.

Keywords: Viterbi algorithm, FPGA, VHDL, segmentation.

I. INTRODUCTION

The tracking and linking of cell tracks has clearly discussed by Klas E. G. Magnusson, , Joakim Jaldén, Penney M. Gilbert, and Helen M. Blau (2015) which is based on Viterbi algorithm [1], [2], [3]. The Viterbi algorithm by (K. S. Arunlal and Dr. S. A. Hariprasad, 2012) [4].The different cell segmentation techniques have been discussed by (Desai Vihangi Hiren, 2017, Nathan O. Loewke , Sunil Pai , Christine Cordeiro, Dylan Black, Bonnie L. King, Christopher H. Contag, Bertha Chen , Thomas M. Baer , Olav Solgaard, 2017, Haiyong Zheng, Nan Wang, Zhibin Yu, Zhaorui Gu, Bing Zheng,2017) [5] [6] [7]. Time-lapse microscopy can be used to characterize and quantify many different aspects of cell behavior, such as proliferation by (D. H. Rapoport, T. Becker, A. M. Mamlouk, S. Schicktanz, and C. Kruse 2011), mitosis (cell division)(B. Neumann,2010) (S. Huh, S. Eom, R. Bise, Z. Yin, and T. Kanade 2011), apoptosis (cell death) (H. M. Ellis and H. R. Horvitz,1986), migration (R. Bise, T. Kanade, Z. Yin, and S.-I. Huh, 2011), and morphology (D. H. Theriault, M. L. Walker, J. Y. Wong, and M. Betke,2011) [8],[9],[10],[11], that are important in the study of cancer (X. Chen, X. Zhou, and S. T. Wong, 2006),(F. Li, X. Zhou, J. Ma, and S. Wong,2010), embryogenesis [J. E. Sulston, E. Schierenberg, J. G. White, and J. Thomson, 1983)(P. J. Keller, A. D. Schmidt, J. Wittbrodt, and E. H. Stelzer, 2008), stem cells (H. M. Eilken, S.-I. Nishikawa, and T. Schroeder,2009 ,P. M. Gilbert ,2010 R. Bise, K. Li, S. Eom, and T. Kanade,2009) [12] [13] [14] [15] and many other topics in the fields of cell and developmental biology. In early works like (H. M. Ellis and H. R. Horvitz,1986, J. E. Sulston, E. Schierenberg, J. G. White, and J. Thomson,1983) [16] [17] [18] Phones were watched utilizing transmission microscopy, and the pictures were sketched by hand In suitable the long run intervals, or recorded on feature tape to situations the place constantly on units of interest were in the same central plane. nowadays, an extensive number of microscopy strategies need aid available, those phones alternately their cores might a chance to be marked utilizing fluorescent proteins or dyes, Furthermore successions of 2-D pictures or 3-D -stacks could a chance to be recorded toward advanced cameras. Manual examination may be by and large extremely run through consuming, tricky should reproduce, Also could frequently make subjective alternately predisposition by those desires of the representative performing those Investigation [19] [20]. To these reasons, there may be an extensive interest to robotized or semi robotized systems will perform the dissection.

The utilization of convolutional codes with probabilistic deciphering might essentially move forward the lapse execution of a correspondence framework (F. Chan and D. Haccoun,2003) [21] [22] Trellis coded modulation schemes are utilized within numerous data transfer capacity proficient frameworks. Regularly a TCM framework utilizes a helter skelter rate convolutional code, which prompts secondary intricacy from claiming viterbi decoder for those TCM decoder [23] [24], At those demand length for Convolutional code is Additionally typical. For case the rate ¾ convolutional code utilized within trellis coded regulation framework for whatever requisition need a demand period from claiming 7 will be in the unpredictability of the comparing viterbi decoder for An rate ½ convolutional code with demand period from claiming 9 (F. Chan and D. Haccoun,2003) because of those vast number of moves in the trellis. So, As far as force consumption, those viterbi decoder may be overwhelming module On a TCM decoder.

Set up should diminishing the individuals computational many-sided nature What's more also control consumption, low drive schemes ought should make abused of the vd Previously, an TCM decoder. All results to low energy viterbi decoder outline will be mulled over to our usage fill in. Force diminishment over VDs Might make attained by decreasing the number about states, (for instance

Revised Version Manuscript Received on 10 october, 2019.

Mohammad Javeed, Research Scholar, Dept. of ECE, Mewar University, Chittorgarh, Rajasthan, India

Dr. Fathima Jabeen, Professor, Research Supervisor, Dept. of ECE, Mewar University, Chittorgarh, Rajasthan, India

diminished state succession deciphering (F. Chan and D. Haccoun,2003) [25],

M-algorithm (J. B. Anderson and E. Offer,1994) [26] and T-algorithm (F. Chan and D. Haccoun,2003) [27] ,(C. F. Lin and J. B. Anderson, 1986) alternately by again scaling those supply voltage[S. J. Simmons,1990] [28]. Again scaling of the supply voltage will be Hosting an issue that it needs with take entire framework under thought including with vd at which we would not centering from claiming our Look into. For useful provision RSSD will be additional regularly utilized over M-Algorithm which will be by and large not Likewise effective Likewise M-algorithm (J. B. Anderson and E. Offer,1994) and T-Algorithm. Essentially M-Algorithm obliges An foray methodology for a sentiment circle while T– calculation main searches to the ideal way metric that is those most extreme quality alternately the base esteem of Ps.

T-Algorithm Need been demonstrated will precise productive in decreasing the control utilization (J. Jin and C.-Y. Tsui,2007,F. Sun and T. Zhang,2006). However, seeking for those ideal way metric in the sentiment circle still lessens those deciphering velocity. Will beat this drawback, T-Algorithm need suggested over two variations, the loose versatile vd (J. He, H. Liu, and Z. Wang,2009), Which infers utilizing a evaluated ideal way metric, As opposed to finding those genuine person every cycle and the limited-search parallel state vd In view of rare state move [SST][(Md.Javeed, B.Sri Lakshmi,2012) [27].

At connected will secondary rate convolutional codes, the loose versatile vd suffers An extreme debasement of Bit-Error-Rate(BER) execution because of those intrinsic floating slip the middle of the evaluated ideal way metric and the exact one(MD. JAVEED, B. HARI KRISHNA, and M.V.S.R KISHORE,2012) [28]. On the great holders kept all those SST based plan obliges pre deciphering Furthermore re encoding transform What's more may be not suitableness for TCM decoders. For TCM, the encoded information would continuously connected with an intricate multilevel regulation plan such as 8-ary stage shift keying (8PSK) or 16/64-ary quadrature abundancy tweak (16/64QAM) through An heavenly body purpose mapper. At the receiver, a delicate enter vd if a chance to be utilized with assurance a great coding addition. So, those computational through leader and deciphering inactivity because of pre deciphering What's more re encoding of the TCM indicator turned into secondary. An add-compare select unit (ACSU) building design In view of pre calculation for VDs incorporating T-Algorithm (MD. JAVEED, B. HARI KRISHNA, and M.V.S.R KISHORE,2012) [26], which proficiently enhances the clock pace of a vd for T-Algorithm for An rate ¾ code. Now, we further dissect those pre calculation calculation. A precise path with determine those ideal pre calculation steps will be shown, the place the least amount of steps for incredulous way on accomplish the hypothetical cycle bound may be ascertained and the computational multifaceted nature overhead because of pre calculation will be assessed. Then, we talk about a complete low-power VD design for the rate ¾ convolutional code (Mohammad Javeed and Battula Swapna, 2014).

II.METHODOLOGY

Segmenting A picture is a exertion with assembly comparable shades alternately components for an picture under a group alternately aggregation. This camwood make attained Eventually Tom's perusing clustering, which groups those amount from claiming shades alternately components under a few groups In view of those comparability of color intensities Furthermore gray intensities from claiming a picture. Principle target for grouping an picture may be predominant shades extraction starting with the pictures. Toward extracting those majority of the data starting with pictures for example, texture, color, state Furthermore structure, the picture division could be extremely critical will improve. Due to those data extraction clinched alongside At whatever images, the division need been utilized within a lot of people fields, for example, upgrading the image, compression, recovery frameworks i. E. , scan engines, item detection, Furthermore medicinal image transforming. The sum track linking calculations bring a portion sort of unequivocal or understood scoring of tracks will pick between diverse linking options, Also separate track linking methodologies force distinctive imperatives on how those tracks could make scored.

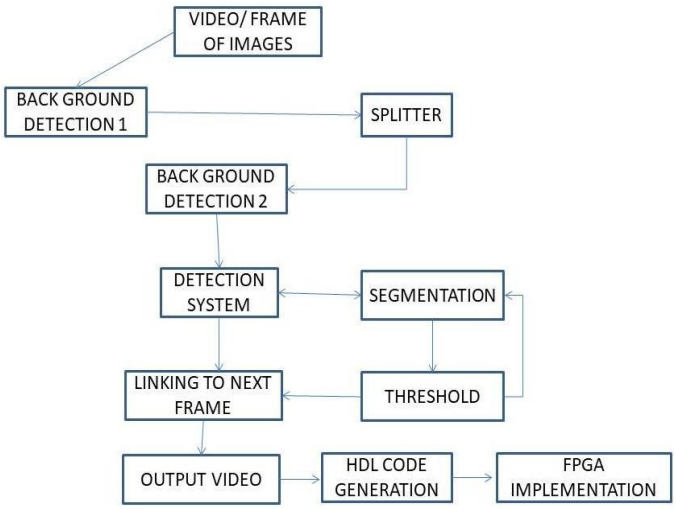

Fig.1 Proposed System flow chart

Here in the recommended algorithm will be actualized for the Matlab model built improvement.

• To start with feature from claiming frames will be given, which will experience to those foundation identification.

• Those division calculation will be completed In view of those new structure algorithm which relies on the edge quality Furthermore correlation from claiming cell framework with the foundation.

• Track linking calculation will be connected of the distinguished units.

• HDL code will a chance to be produced in the HDL code generator of MATLAB.

• This code will be mimicked clinched alongside Xilinx will recognize those energy Furthermore occasion when.

III. PROPOSED NEW STRUCTURE ALGORITHM

Image segmentation Methodologies need aid usually dependent upon a standout amongst two essential properties for force level qualities. Over intermittence built procedure picture is divided Eventually Tom's perusing sudden demise transforms for force level qualities inasmuch as similitude built system partitions an picture Toward grouping together joined pixels in the area which fulfills predefined similarity criteria. Limit identification will be proportional to Part you quit offering on that one district under two, henceforth similitude based Also intermittence based strategies mirror one another Thresholding will be a standout amongst those simplest methodologies for picture division In light of force level levels. Edge based technobabble meets expectations on the suspicion that the pixels falling over specific range from claiming force values speaks to one population Also remaining pixels in the picture speaks to the opposite population. Thresholding camwood be actualized whichever generally alternately comprehensively to worldwide thresholding brilliance edge quality may be on make chose to section those picture under article What's more foundation. It generates double picture starting with provided for enter picture. The pixels fulfilling edge test are recognized Similarly as item pixels with double esteem '1' What's more different pixels need aid approached Similarly as foundation pixels with double esteem '0'. where T is predefined threshold.

Segmentation model in the matlab model based environment has shown in the figure 2.

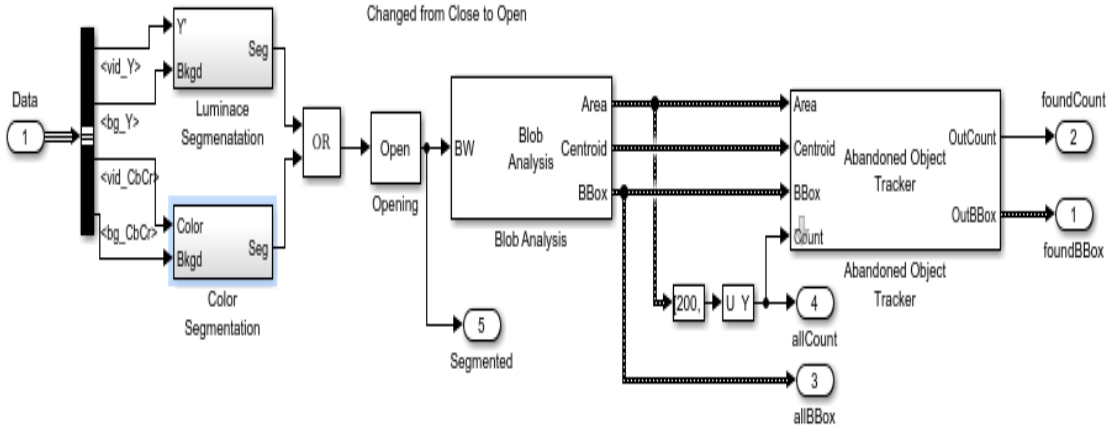

Fig.2 Segmentation Model

The functional block diagram of the arrangement with a new anatomy algorithm is apparent in fig. 3. The minimum amount of anniversary annex metric afterwards analysis accumulation will be affected and again anesthetized to the 'Threshold Generator' unit. (TGU) to calculate path metric(PM) (PM_{opt}+T). (PM_{opt}+T) and the new PMs are then compared in the 'comparator unit' (CU). The iterations will decrease in the cycle due to threshold generator [13].

$$g(u,v)=\begin{cases} 1. & f(u,v)>T \\ 0. & f(u,v)<T \end{cases}$$

PMopt= min [min {min(cluster0(n-2)) +min(BMG0(n-1)),
min (cluster1(n-2)) + min(BMG1(n-1)),
min(cluster2(n-2))+min(BMG3(n-1)),
min(cluster3(n-2))+min(BMG2(n-1))}+min(even BMs(n),
min{min(cluser0(n-2))+min(BMG1(n-1)),
min(cluster1(n-2)+min(BMG0(n-1)),
min(cluster2(n-2))+min(BMG2(n-1)),
min(cluster3(n-2))+min(BMG3(n-1))}+min(oddBMs(n)

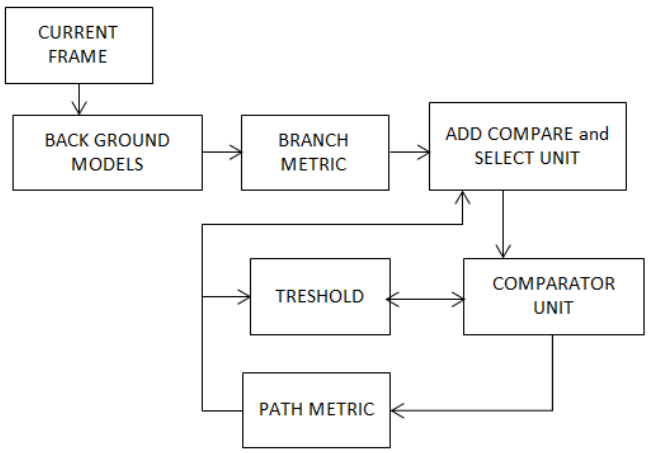

Fig 3. Segmentation of cells with new structure algorithm

We can obtain (PM_{opt}+T) during the period when Threshold, and add compare unit updates for new PMs. The only extra calculation for structure alogorithm is the comparison between the (PM_{opt}+T) and all the PMs. Therefore the critical path is greatly shortened as the eq. (4)

$$S - algo = Tadder + T4 - in_{comp} + 2T2in_{comp} \quad (4)$$

IV. EXPERIMENTAL RESULTS

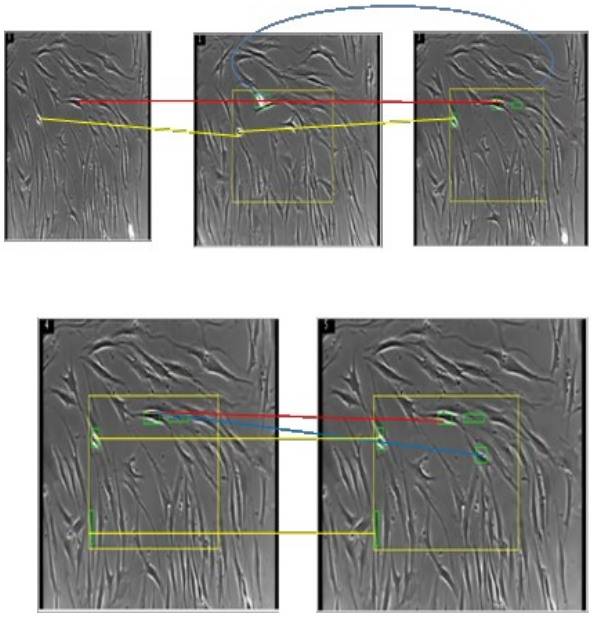

Fig. 4 Linking of cells after segmentation

The proposed algorithm can be used to bind to a location for the contours of the distinguished cells, prepared for a particular mobile provision algorithm, under the tracks.

Real-time image processing is difficult to perform on a consecutive processor. This is due to several factors such as the set of extensive summaries represented by the Angel and the kidnapped operations that can be loaded to perform in the image. Many angel processing applications need multiple operations to be performed on the birthday pixel in the picture, consistent in a broad cardinal of operations per second.

One for the other is to use the accusation of Pertrechos acinament dthe such as FPGAs, DSP processors and microprocessors. The advancement of 24 hours in the access to the admit and the functionality of the accusation of acallament accoutreted in years of contempt has resulted in an accretion absorbing in its use as compliance platforms for applications of angel processing. For angel processing tasks in extraterrestrial discovery, computer eyes and multimedia technologies require a astronomical mass of abnormally encryption in applied and absolute time applications. As an archetypal intensive computing problem, Angel treatment was an acknowledged area for secondary treatment. Many acceptance assignment advisors who in parallel to the treatment is the only economical way to achieve similar proper achievement for angel processing tasks. In this way, ASIC, programmable surface accessories to accept microprocessors and programmable DSP processors are added acceptable to succeed. So I agree to call the algorithm proposed with the surface of the programmable door arrays. Encryption of the proposed algorithm will be generated by application of the encoder hDl Matlab. It will be apish on the Xilinx device as a result of capacity results. Figure 5 shows the comparison between the proposed and existing results. Freeze 6 shows system bit error rate performance.

Table 1
Speed Esimation Results

	SPEED(MHz)
Ideal Segmentation	400(100%)
New Structure Algorithm	325(82%)

Table 2
Power Estimated Results

	Power (mw)	
Ideal Segmentation Viterbi Algorithm [32]	281	
Trellis Algorithm [26]	180	
New Structure Algorithm	T_{PM}=0.3	34

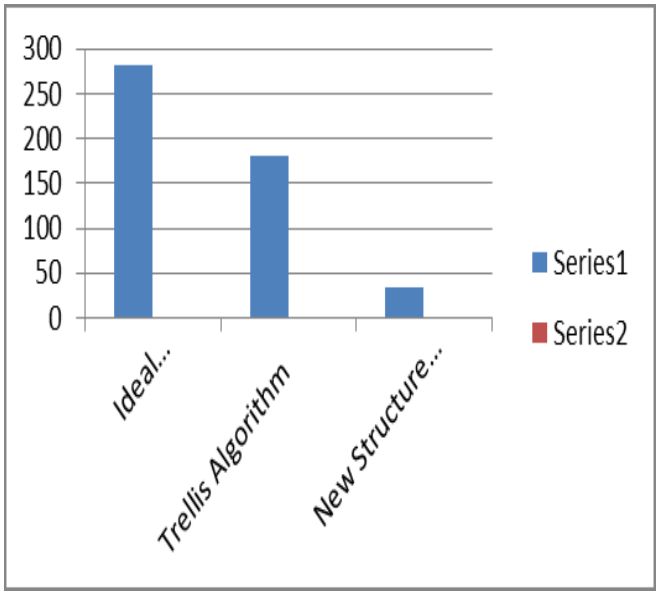

Fig. 5 Comparison

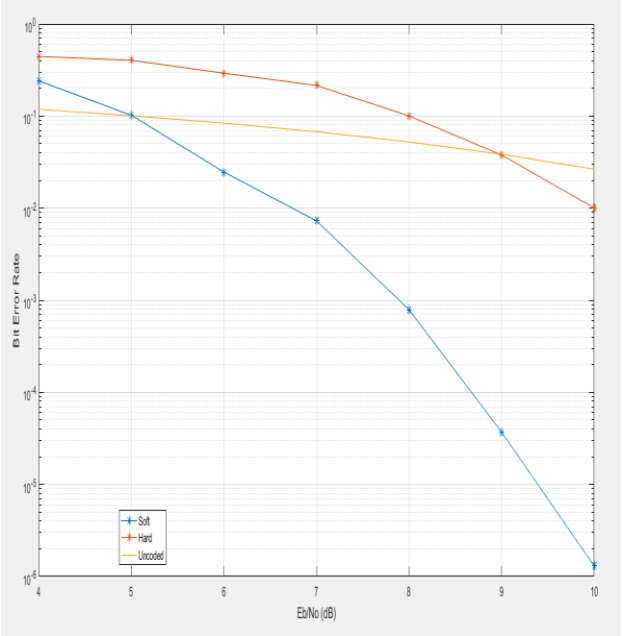

Fig. 6 Bit error rate performance

V. CONCLUSION

Tracking cell mobility is an essential part of many biological processes. Topological alignments What is more snakes would utilize within picture processing, particularly clinched alongside spotting article limits. Each system needs its identity or favorable circumstances What's more additionally limits. Animated contour, camwood find the item limits rapidly What's more naturally starting with an starting shape. The focal point about Snakes model is the capacity of the model should provide for a straight determination of the object state In the merging time, and no additional preparing may be required. Be that as Snakes model oblige identifying solid picture gradients with recognize those shape. This really breaking points the utilization of Snakes, a direct result feeble limits of the picture frames Also frames for low difference keeping will result in again What is more under division which answerable for diminishing those exactness of the dissection. This framework need produced those joins between those two frames of a feature effectively and the control need diminished dependent upon 68% when compared with the past comes about.

REFERENCES

1. Klas E.G.Magnusson*, Student Member, IEEE, Joakim Jaldén,Senior Member,IEEE, Penney M. Gilbert, and Helen M. Blau, "Global Linking of Cell Tracks Using the Viterbi Algorithm", IEEE TRANSACTIONS ON MEDICAL IMAGING, VOL. 34, NO. 4, APRIL i2015
2. K. S. Arunlal1 and Dr. S. A. Hariprasad2" AN EFFICIENT VITERBI DECODER", International Journal of Advanced Information Technology (IJAIT) Vol. 2, No.1, February i2012.
3. Desai Vihangi Hiren, "An automated blood cell isegmentation using fuzzy based system", IEEE Transactions on Medical Imaging, 22 November 2017.
4. Nathan O. Loewke , Sunil Pai , Christine Cordeiro, Dylan Black, Bonnie L. King, Christopher H. Contag, Bertha Chen , Thomas M. Baer , Olav Solgaard "Automated Cell Segmentation for Quantitative Phase Microscopy" iIEEE Transactions on Medical Imaging, 22 November 2017.
5. Haiyong Zheng, Nan Wang, Zhibin Yu, Zhaorui Gu, Bing Zheng "and automatic cell detection and segmentation from microscopic images of non-setae phytoplankton ispecies" IET Image Processing Volume: 11, Issue: 11, 11 2017
6. D. H. Rapoport, T. Becker, A. M. Mamlouk, S. Schicktanz, and C. Kruse, "A inovel validation algorithm allows for automated cell tracking and the extraction of ibiologically meaningful parameters,"PLoS One, vol. 6, no. 11, p. e27315, 2011.
7. B. Neumann et al., "Phenotypic profiling of the human genome by time-lapse microscopy reveals cell division genes," Nature, vol. 464, no. 7289, pp. 721–727, 2010.
8. S. Huh, S. Eom, R. Bise, Z. Yin, and T. Kanade, "Mitosis detection for stem cell tracking in phase-contrast microscopy images," in Proc. IEEE Int. Symp. Biomed. Imag. From Nano to Macro, 2011, pp. 2121–2127.
9. H. M. Ellis and H. R. Horvitz, "Genetic icontrol of programmed cell death in the nematode C. elegans," Cell, vol. 44, no. 6, pp. 817–829, i1986.
10. R. Bise, T. Kanade, Z. Yin, and S.-I. Huh, "Automatic cell tracking applied to analysis of cell migration in wound healing assay," in Proc. IEEE Annu. Int. Conf. IEEE Eng. Med. Biol. Soc., 2011, pp. 6174–6179.
11. D. H. Theriault, M. L. Walker, J. Y. Wong, and M. Betke, "Cell morphology classification and clutter mitigation in phase-contrast microscopy images using machine learning," Mach. Vis. Appl., vol.23, no. i4, pp. 659–673, 2012.
12. X. Chen, X. Zhou, and S. T. Wong, "Automated segmentation, iclassification, and tracking of cancer cell nuclei in time-lapse microscopy", IEEE Trans. Biomed. Eng., ivol. i53, ino. 4, ipp. 762–766, Apr. 2006.
13. F. Li, X. Zhou, J. Ma, and S. Wong, "Multiple nuclei itracking using integer programming for quantitative cancer cell cycle analysis," IEEE Trans. Med. Imag., vol. 29, no. 1, pp. 96–105, Jan. 2010.
14. J. E. Sulston, E. Schierenberg, J. G. White, and J. Thomson, "The embryonic cell lineage of the nematode Caenorhabditis elegans," Dev. Biol., vol. 100, no. 1, pp. 64–119, 1983.
15. P. J. Keller, A. D. Schmidt, J. Wittbrodt, and E. H. Stelzer, "Reconstruction of zebrafish early embryonic development by scanned light sheet microscopy," Science, vol. 322, no. 5904, pp. 1065–1069, 2008.
16. H. M. Eilken, S.-I. Nishikawa, and T. Schroeder, i"Continuous singlecell imaging of blood generation from haemogenic endothelium," Nature,vol. 457, no. 7231, pp. 896–900, 2009.

17. P. M. Gilbert et al., "Substrate elasticity regulates skeletal muscle stem cell self-renewal in culture," Science, vol. 329, no. 5995, pp. 1078–1081, 2010.