Laboratoire d'Automatique de Tlemcen

IEEE AP-S Antennas and Propagation Society

جامعة أبو بكر بلقايد
UNIVERSITÉ DE TLEMCEN

TINY TAPOUT HANDS ON Workshop

OPEN SILICON

Pr Belkacem BENADDA

belkacem.benadda@univ-tlemcen.dz

I- Introduction

An integrated circuit (IC), or electronic chip, is a miniature electronic circuit that combines thousands or even millions of transistors, resistors, and capacitors onto a single piece of semiconductor material, enabling device miniaturization, improved performance, and reduced costs.

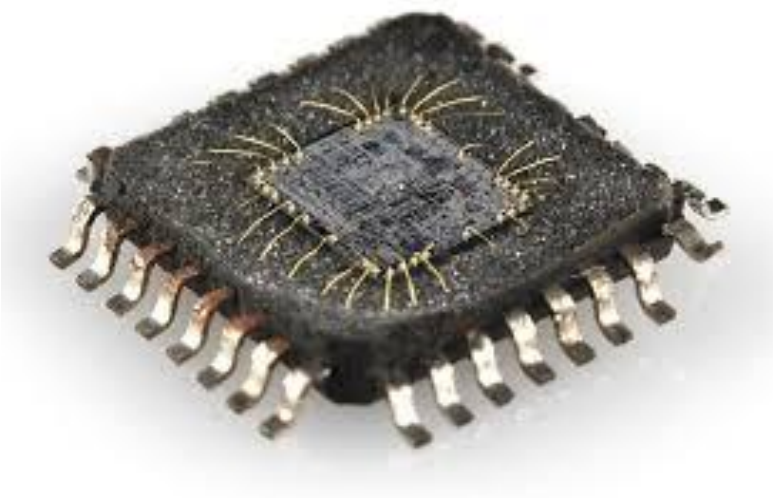

I- Introduction

ASIC: Application-Specific Integrated Circuit, designed for a specific task, unlike generic processors. Offering better performance, lower power consumption, and a smaller size.

- Designed to perform a single function.
- Once manufactured, its operation cannot be modified.
- Very high development cost, making it primarily suitable for high-volume production.

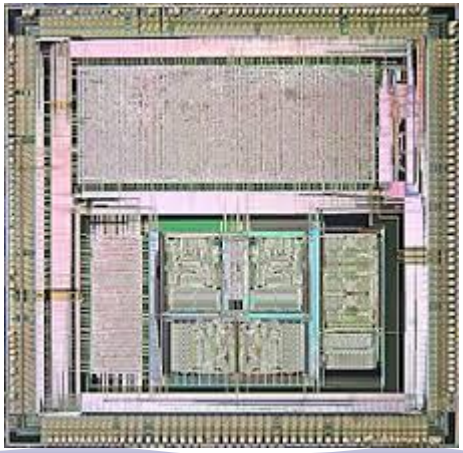

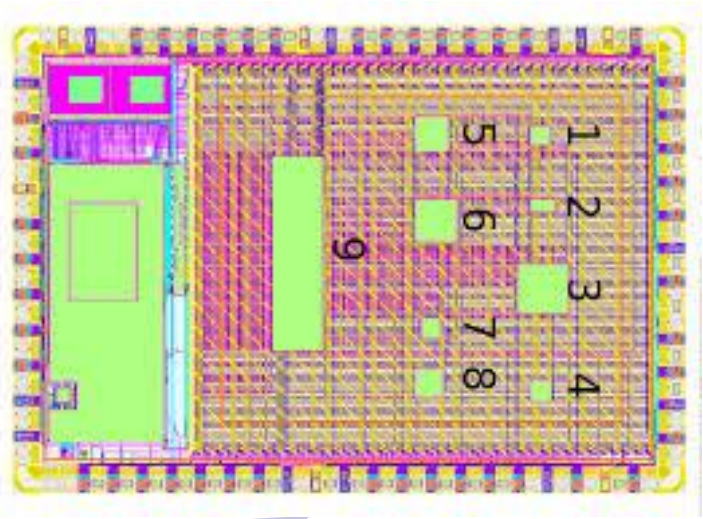

I- Introduction

Foundry: a factory where integrated circuits (ICs) are manufactured.

- TCSM,
- IHP Micro Electronics,

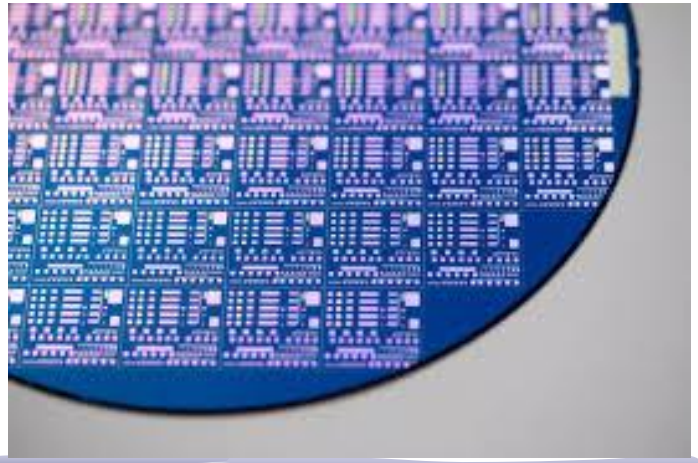

I- Introduction

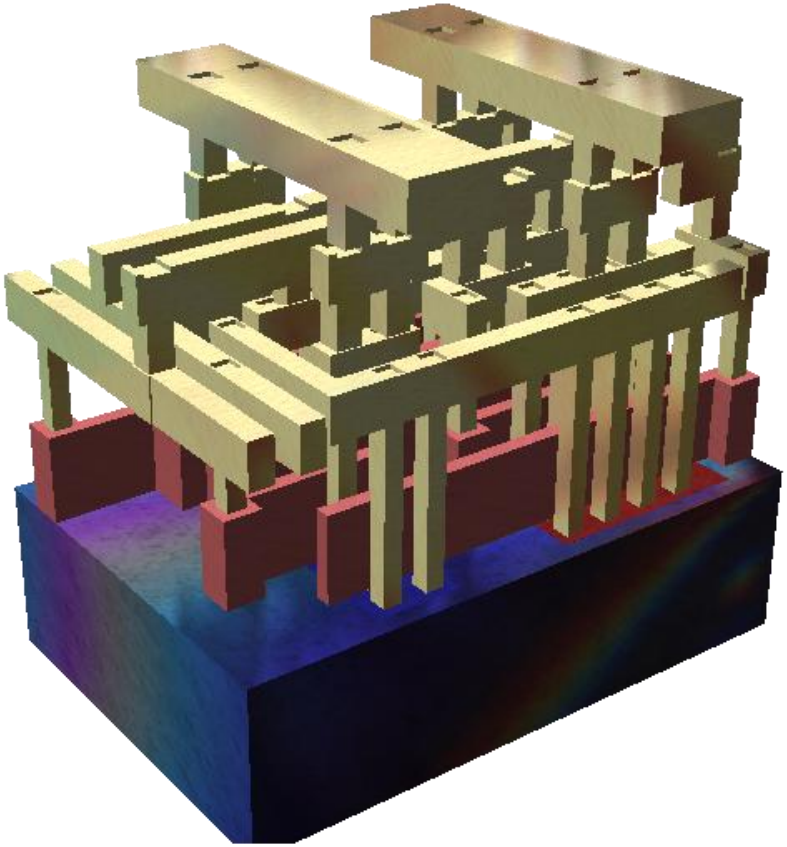

GDSII: It is a binary *file* format representing planar geometric shapes, text labels, and other information about the layout

I- Introduction

ASIC Design Flow

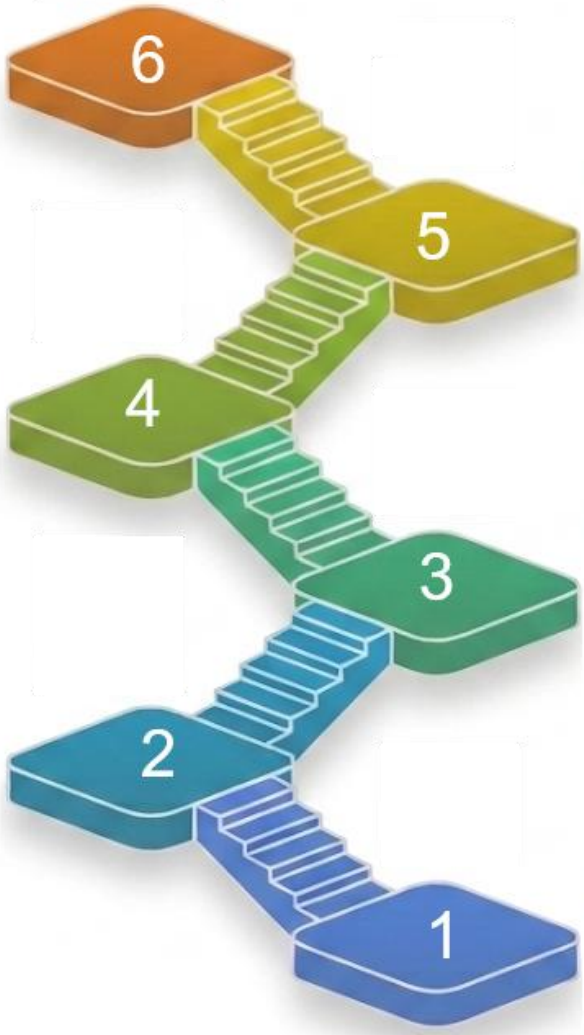

GDSII

Generating the final layout file for fabrication.

Tape-Out

Preparing the final design for manufacturing.

Physical Design

Laying out the circuit on a silicon wafer.

Verification

Ensuring the design meets specifications through simulation and testing.

Synthesis

Converting RTL code into a gate-level netlist.

RTL Design

Creating the initial digital circuit design using hardware description languages.

II- Tiny Tapeout

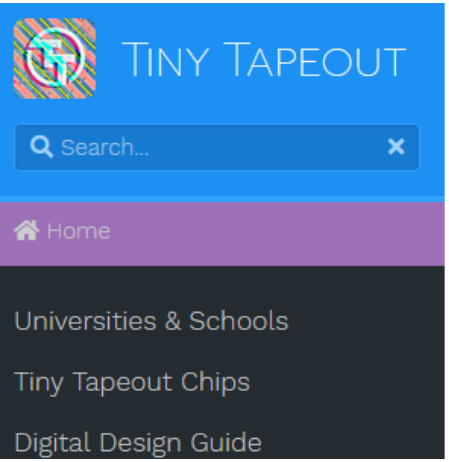

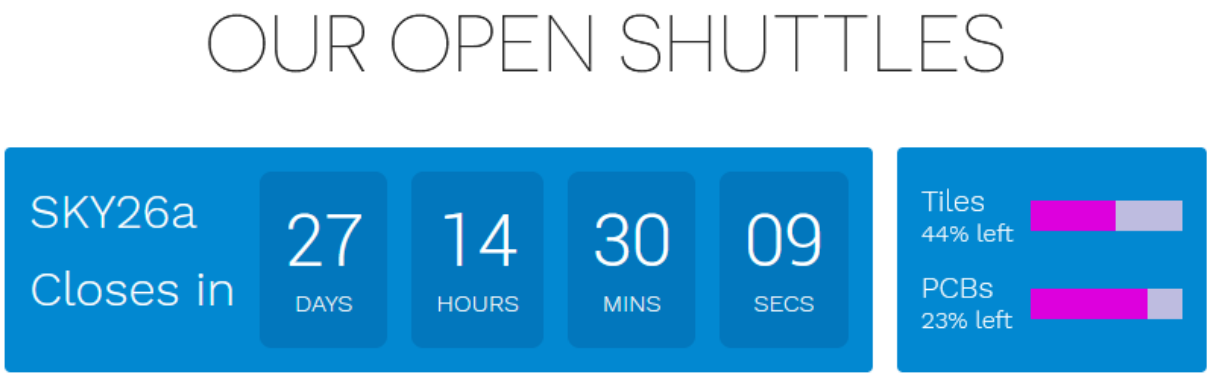

II- Tiny Tapeout

- Tile 100um tall, about 1000 logic gates

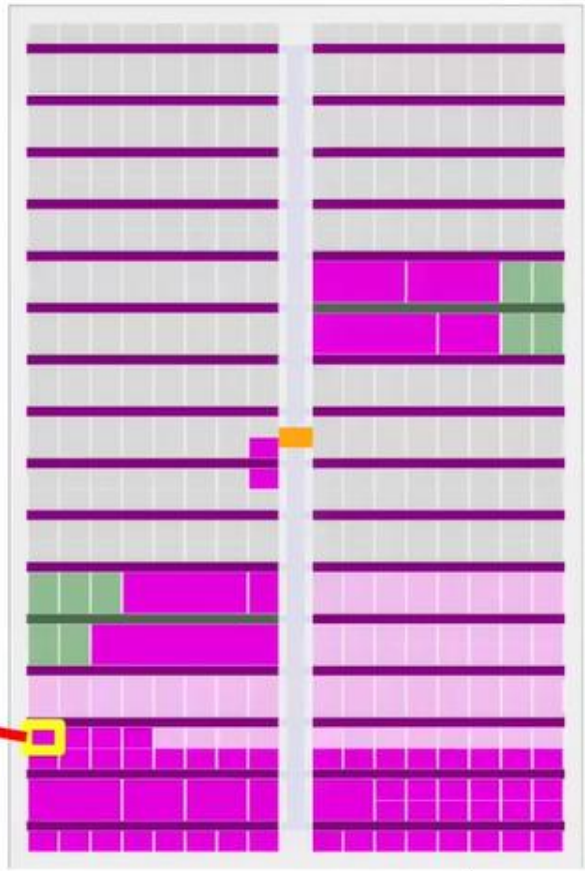

II- Tiny Tapeout

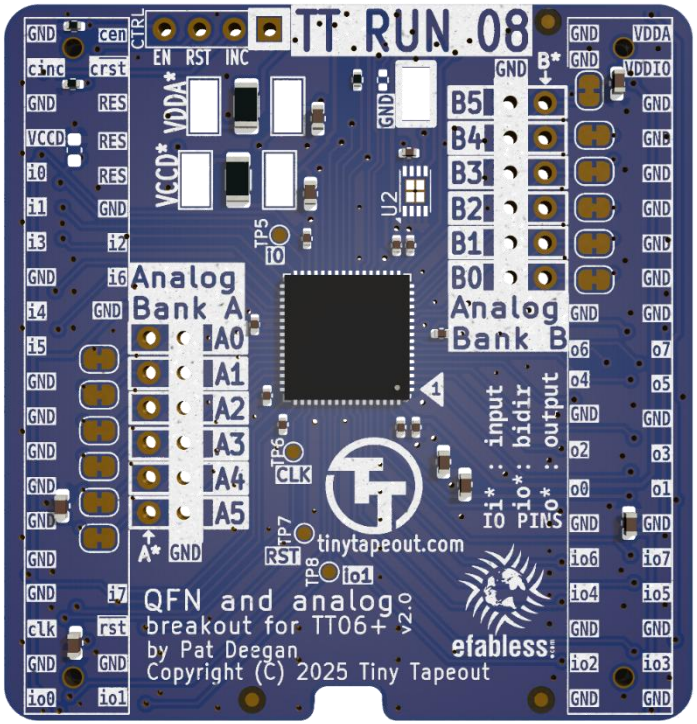

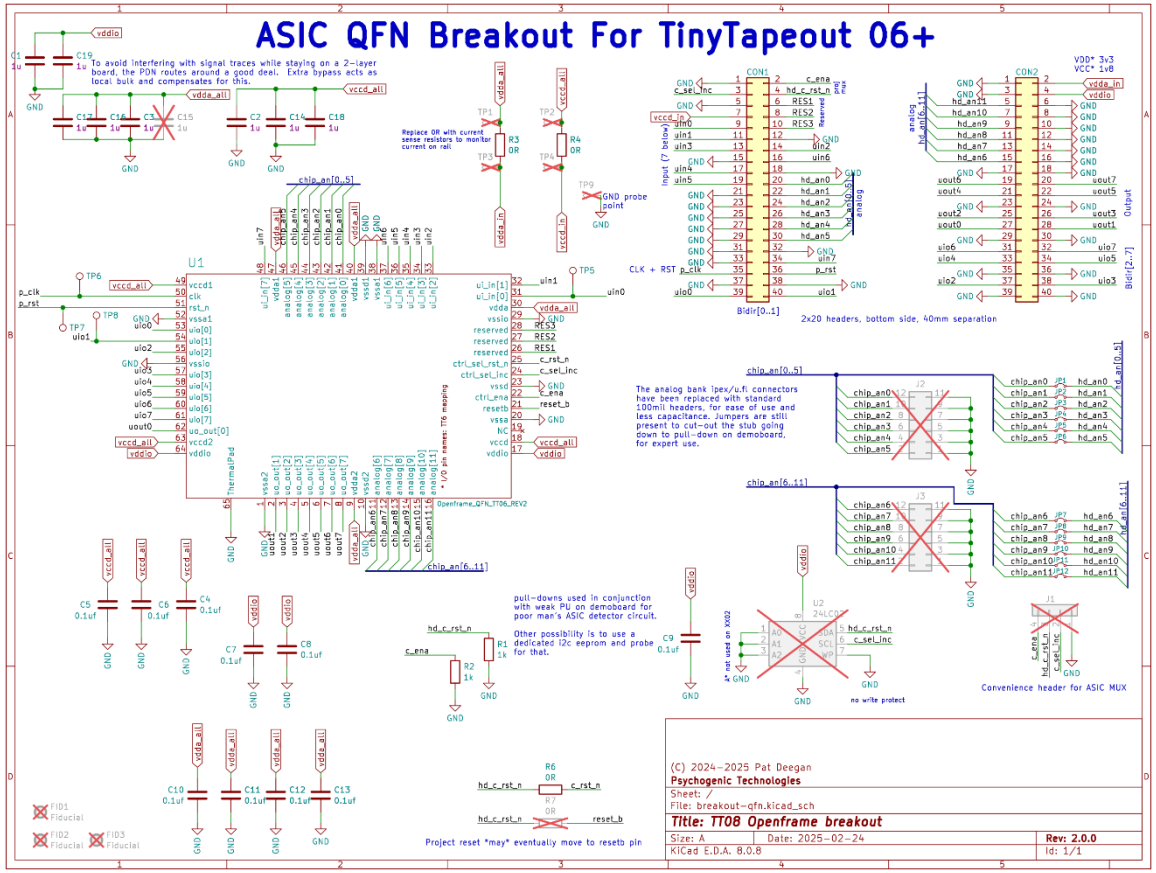

IV- Example H-Bridge

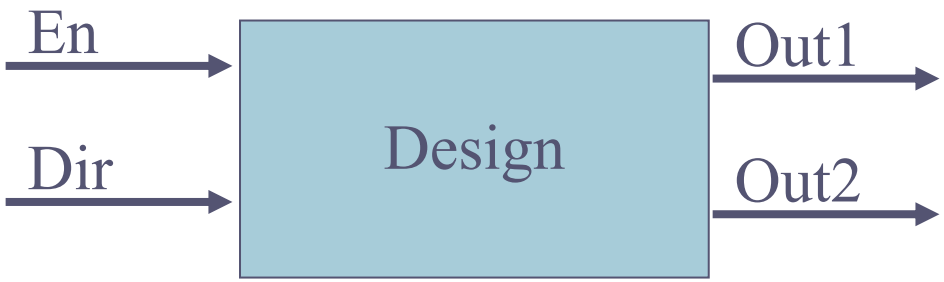

En	Dir	Out1	Out2
0	x	0	0
1	0	1	0
1	1	0	1

Out1 = En and (not Dir)

Out 2 = En and Dir

IV- Example H-Bridge

Wokwi implementation and simulattion

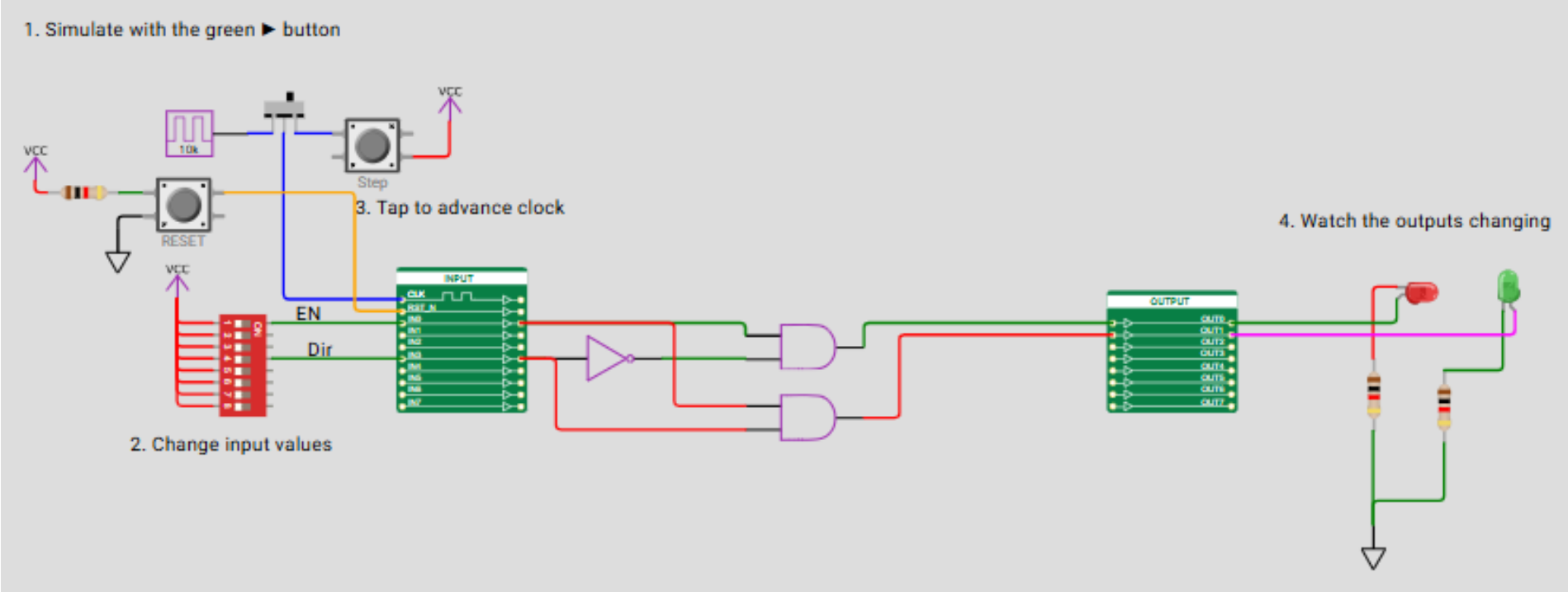

IV- Example H-Bridge

Out1 and Out2 are provided from a Tiny Tapeout chip

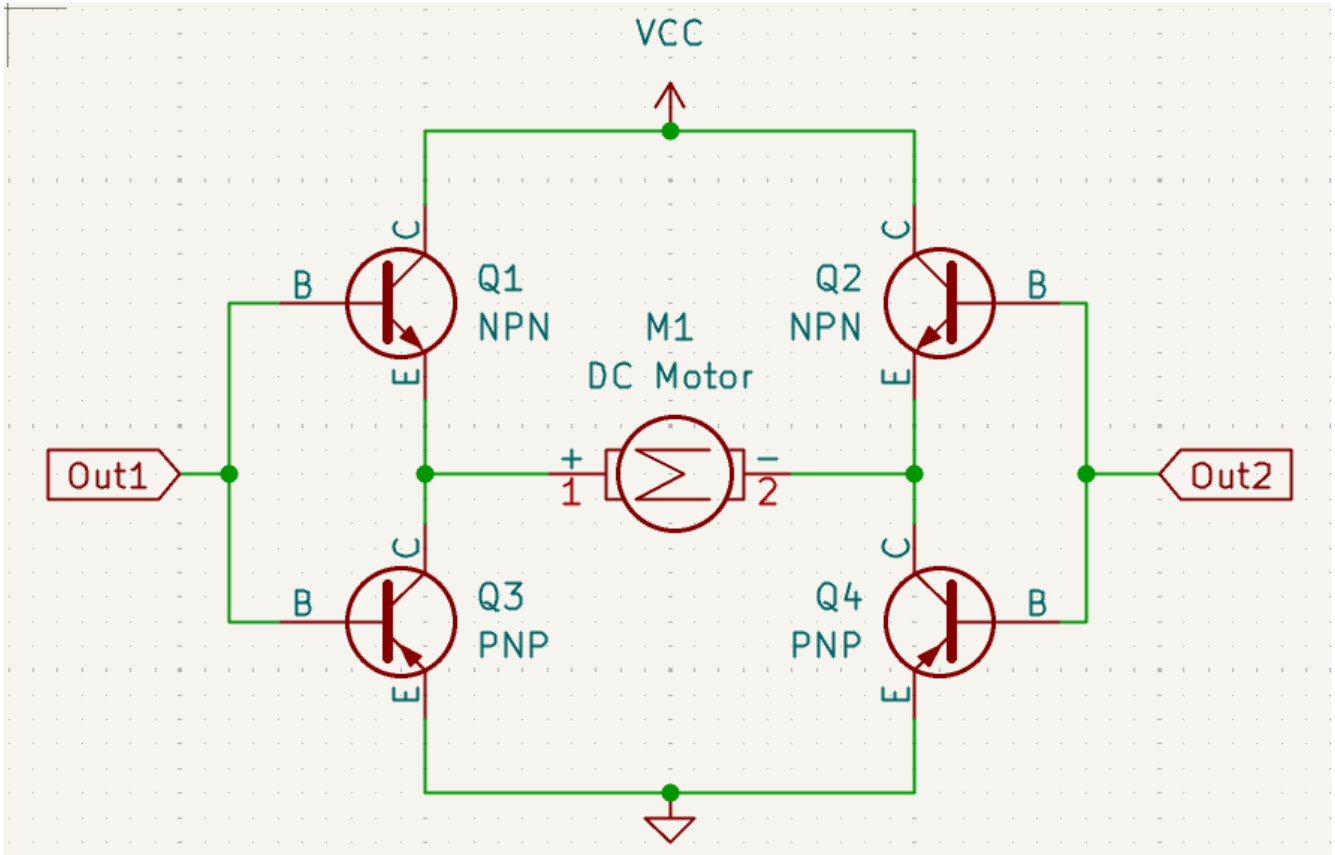

IV- Example H-Bridge

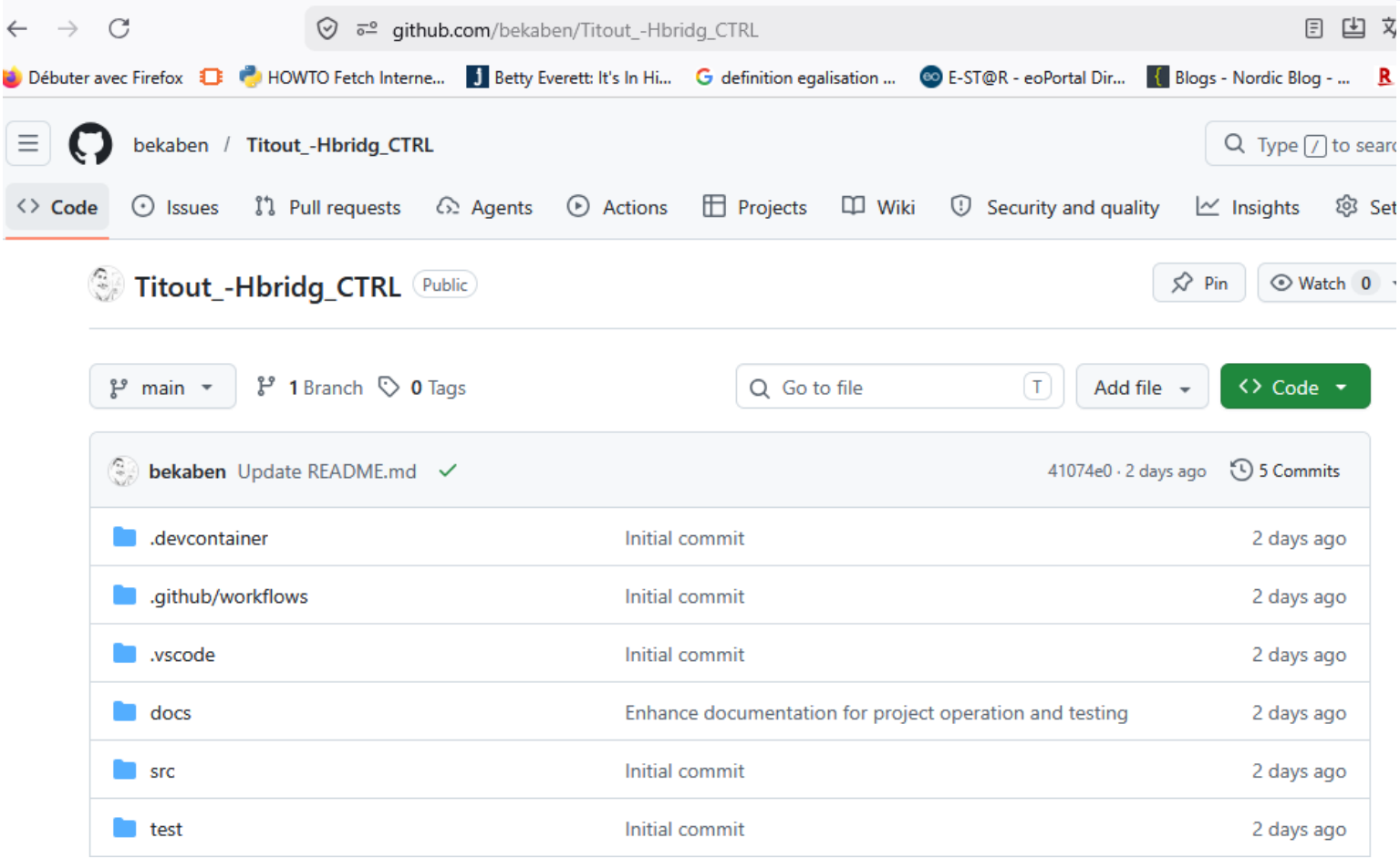

V- BFD-1000 5 channels + Obstacle + Collision

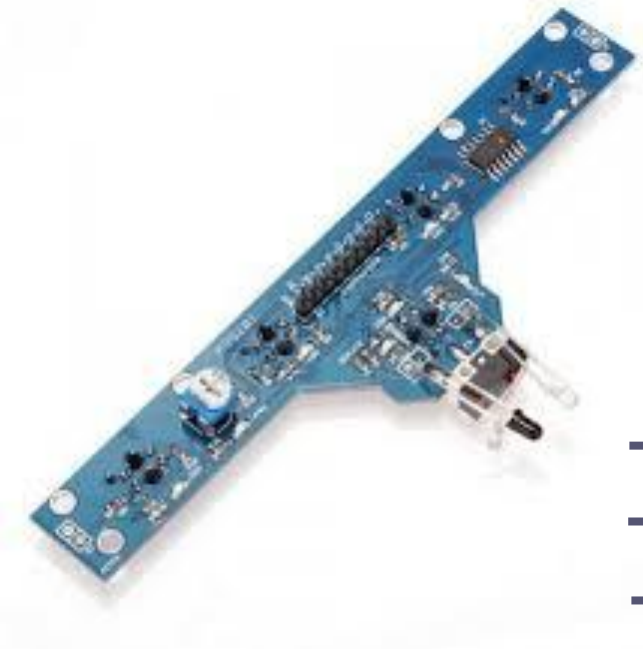

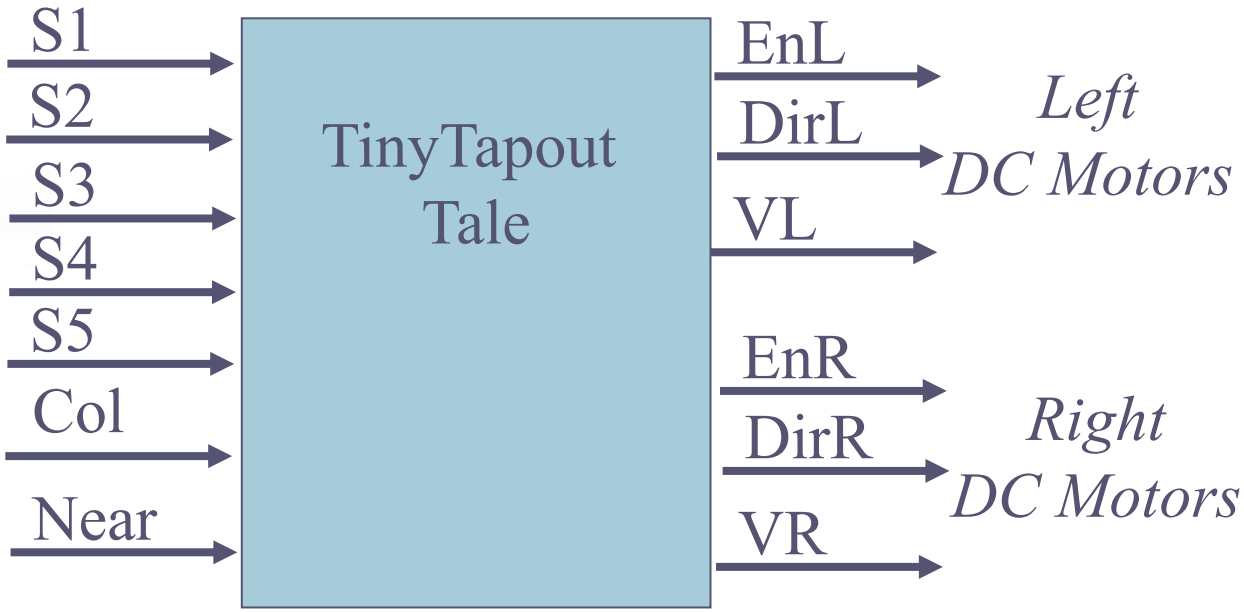

V- BFD-1000 5 channels + Obstacle + Collision

Implement the line following process in TinyTapout Tale

III- Practical Design

S1	S2	S3	S4	S5	CDS	Near	EnL	DirL	VL	EnL	DirR	VR
x	x	x	x	x	1	x	0	0	0	0	0	0
x	x	x	x	x	x	1	0	0	0	0	0	0
1	1	0	1	1	0	0	1	1	1	1	1	1
1	0	0	1	1	0	0	0	0	0	1	1	0
1	0	1	1	1	0	0	0	0	0	1	1	1
0	0	1	1	1	0	0	1	0	0	1	1	0
0	1	1	1	1	0	0	1	0	1	1	1	1
1	1	0	0	1	0	0	1	1	0	0	0	0
1	1	1	0	1	0	0	1	1	1	0	0	0
1	1	1	0	0	0	0	1	1	0	1	0	0
1	1	1	1	0	0	0	1	1	1	1	0	1

OPEN SILICON

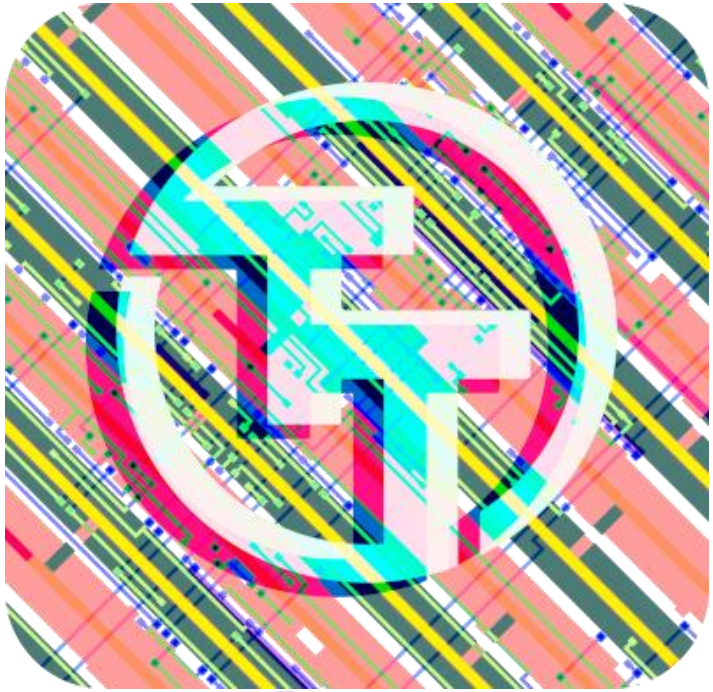

THANKS