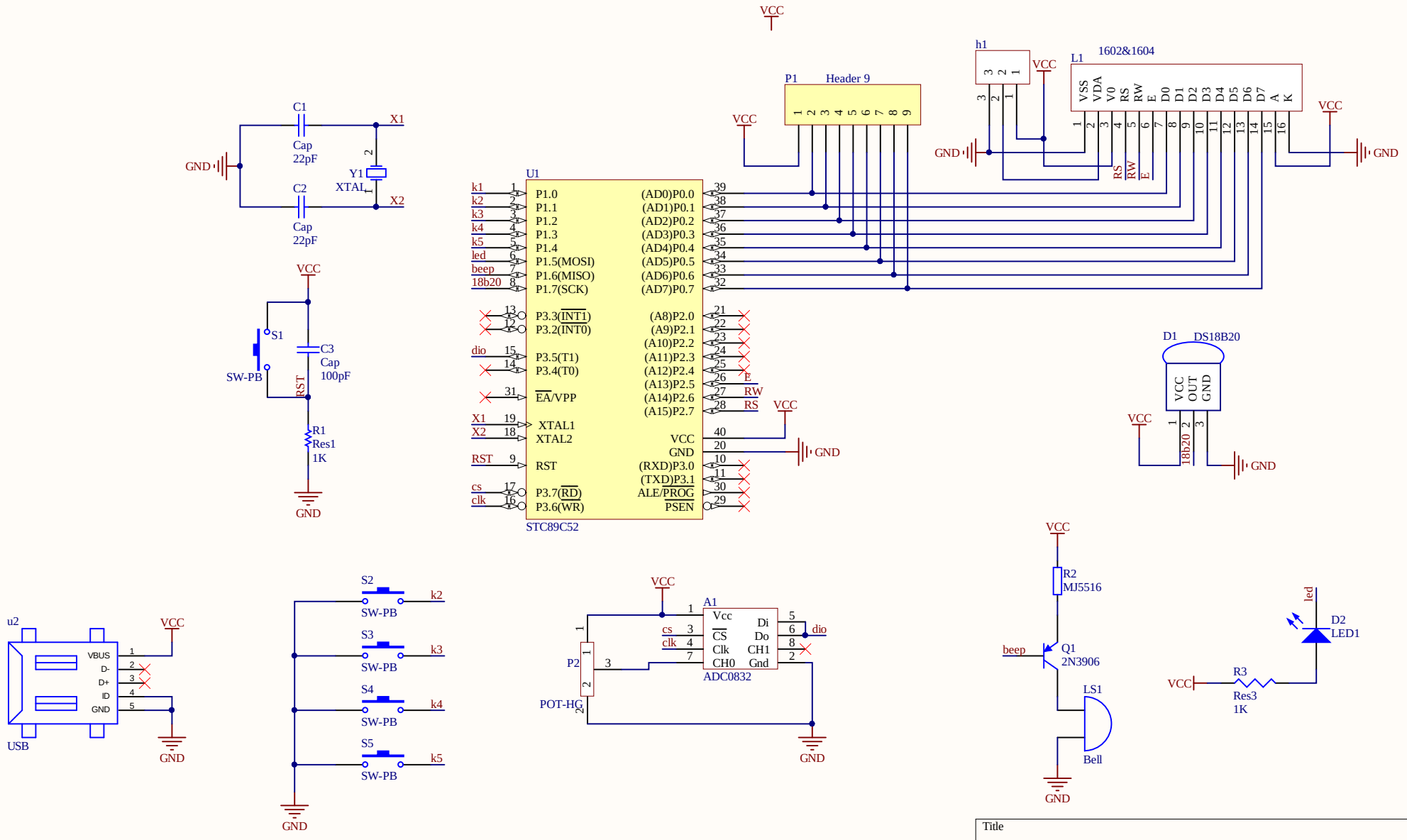

Title		
Size A4	Number	Revision
Date: 2019/5/19		Sheet of
File: E:\ \ \ \Sheet1.SchDoc		Drawn By: