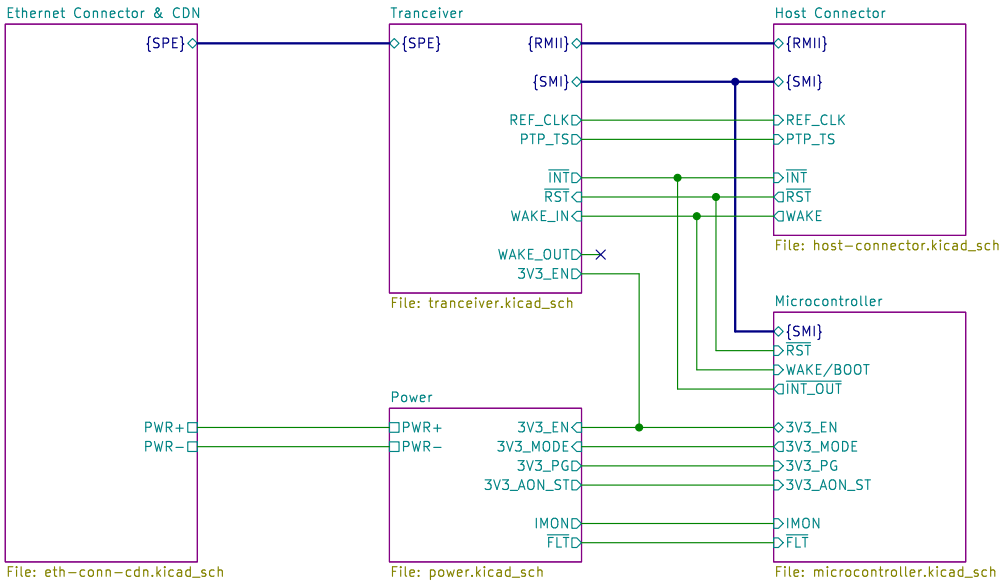

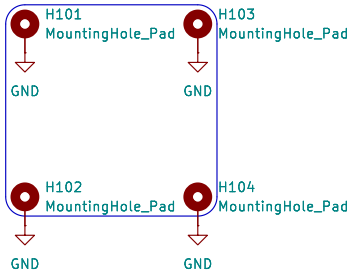

Sheet: /
File: phy−module−10−base−t1s−v1.kicad_sch

Title:

Size: A4	Date:	**Rev:**
KiCad E.D.A. 9.0.7		Id: 1/6

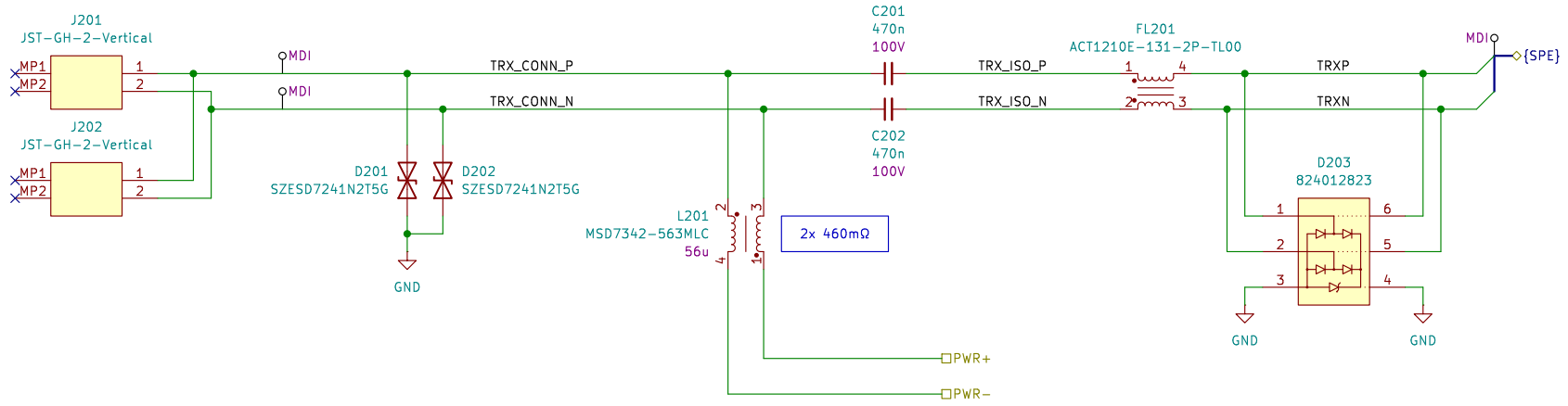

Sheet: /Ethernet Connector & CDN/
File: eth-conn-cdn.kicad_sch

Title:

Size: A4	Date:	Rev:
KiCad E.D.A. 9.0.7		Id: 2/6

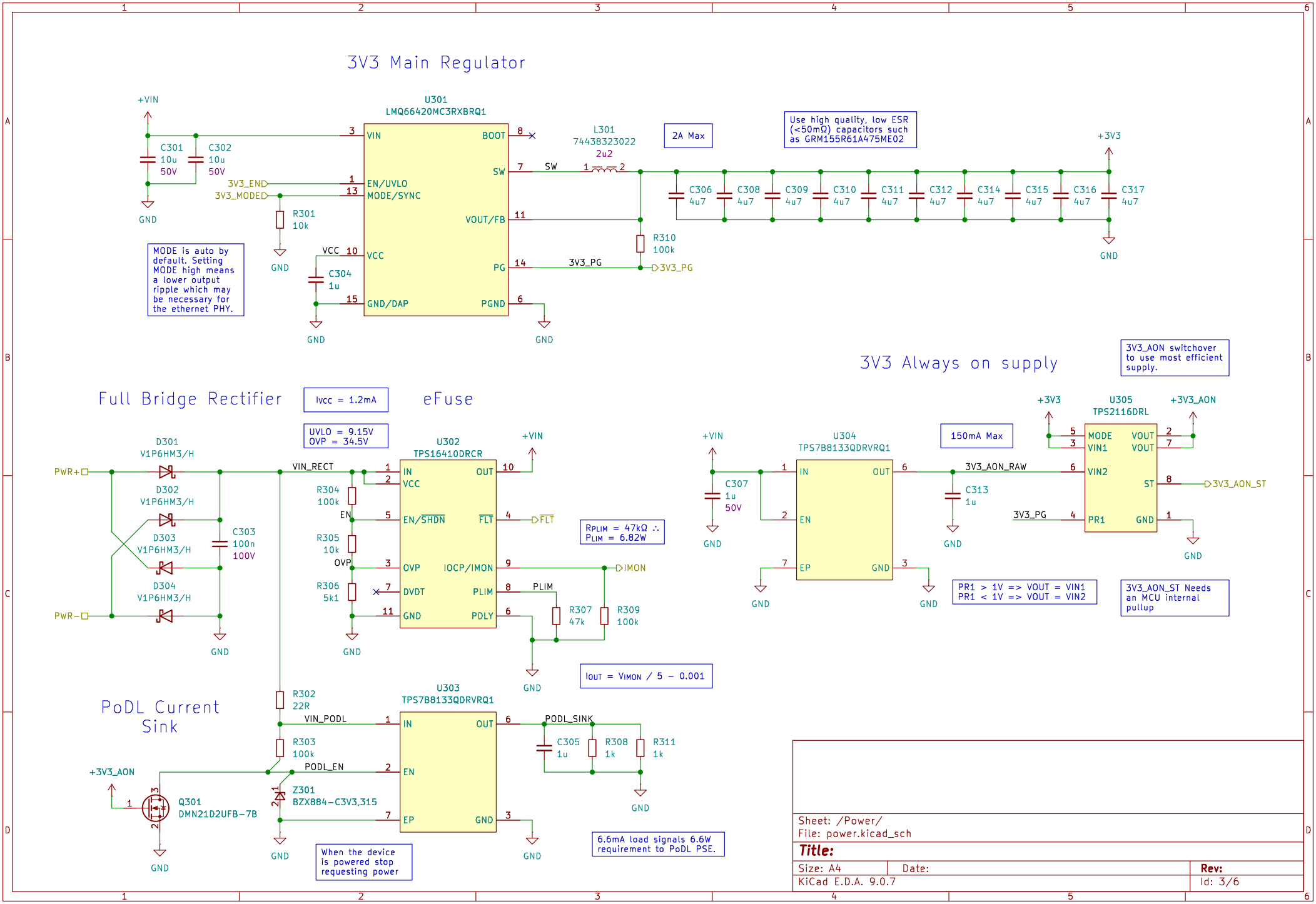
3V3 Main Regulator
+VIN
C301 10u 50V
C302 10u 50V
GND
3V3_EN
3V3_MODE
R301 10k
U301
LMQ66420MC3RXBRQ1
VIN
EN/UVLO
MODE/SYNC
VCC
GND/DAP
BOOT
SW
VOUT/FB
PG
PGND
VCC
C304 1u
L301
74438323022
2u2
SW
2A Max
Use high quality, low ESR (<50mΩ) capacitors such as GRM155R61A475ME02
C306 4u7
C308 4u7
C309 4u7
C310 4u7
C311 4u7
C312 4u7
C314 4u7
C315 4u7
C316 4u7
C317 4u7
+3V3
R310 100k
3V3_PG
MODE is auto by default. Setting MODE high means a lower output ripple which may be necessary for the ethernet PHY.
Full Bridge Rectifier
Ivcc = 1.2mA
eFuse
UVLO = 9.15V
OVP = 34.5V
D301 V1P6HM3/H
D302 V1P6HM3/H
D303 V1P6HM3/H
D304 V1P6HM3/H
PWR+
PWR−
C303 100n 100V
VIN_RECT
U302
TPS16410DRCR
IN
VCC
EN/SHDN
OVP
DVDT
GND
OUT
FLT
IOCP/IMON
PLIM
PDLY
R304 100k
R305 10k
R306 5k1
EN
OVP
FLT
IMON
PLIM
R307 47k
R309 100k
RPLIM = 47kΩ ∴ PLIM = 6.82W
IOUT = VIMON / 5 − 0.001
3V3 Always on supply
3V3_AON switchover to use most efficient supply.
+VIN
C307 1u 50V
U304
TPS7B8133QDRVRQ1
IN
EN
EP
OUT
GND
150mA Max
3V3_AON_RAW
C313 1u
3V3_PG
+3V3
U305
TPS2116DRL
MODE
VIN1
VIN2
PR1
VOUT
ST
+3V3_AON
3V3_AON_ST
PR1 > 1V => VOUT = VIN1
PR1 < 1V => VOUT = VIN2
3V3_AON_ST Needs an MCU internal pullup
PoDL Current Sink
R302 22R
VIN_PODL
R303 100k
PODL_EN
+3V3_AON
Q301
DMN21D2UFB-7B
Z301
BZX884-C3V3,315
U303
TPS7B8133QDRVRQ1
PODL_SINK
C305 1u
R308 1k
R311 1k
When the device is powered stop requesting power
6.6mA load signals 6.6W requirement to PoDL PSE.
Sheet: /Power/
File: power.kicad_sch
Title:
Size: A4
Date:
Rev:
KiCad E.D.A. 9.0.7
Id: 3/6

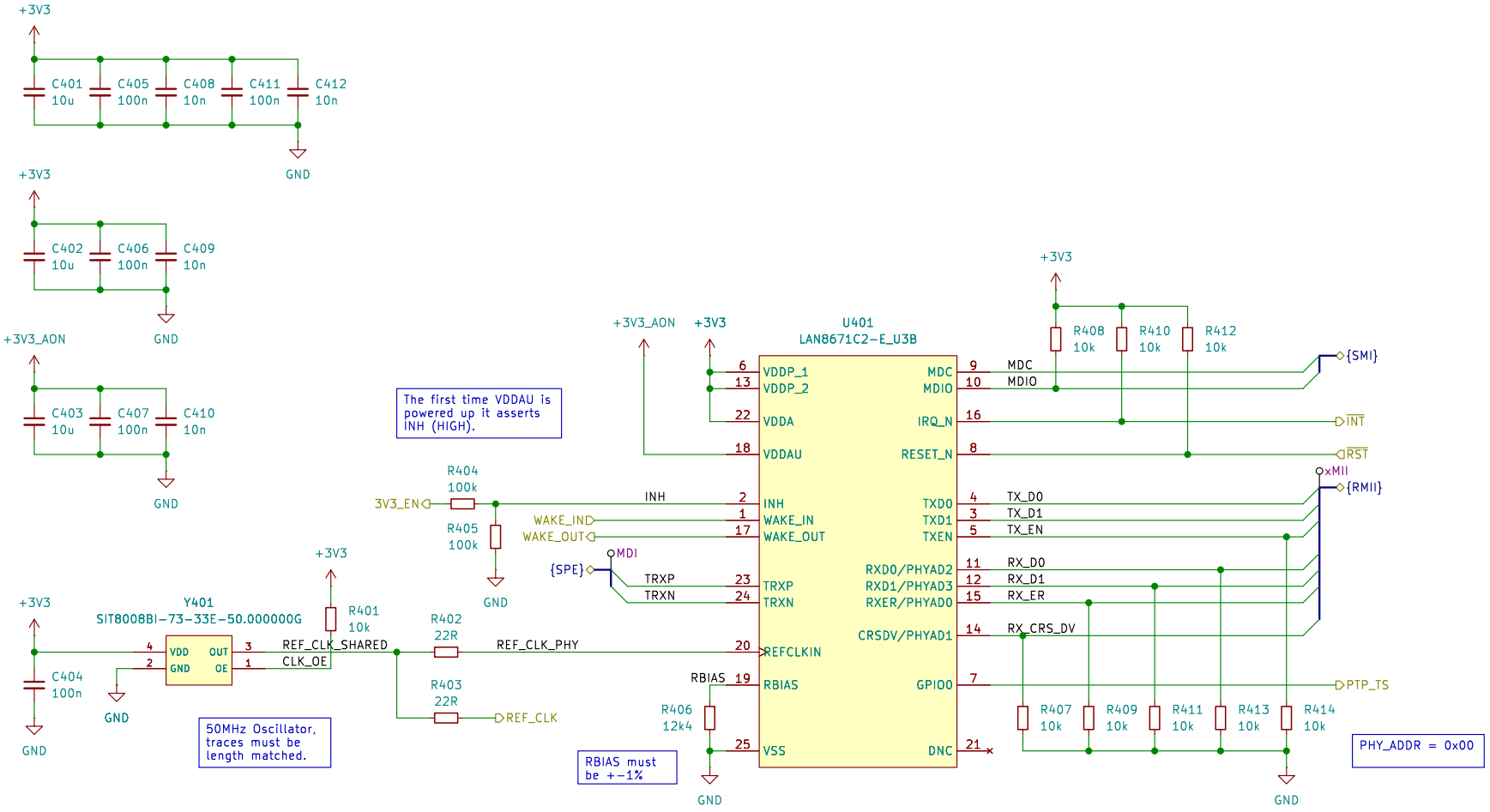

Sheet: /Tranceiver/
File: tranceiver.kicad_sch

Title:

Size: A4	Date:	Rev:
KiCad E.D.A. 9.0.7		Id: 4/6

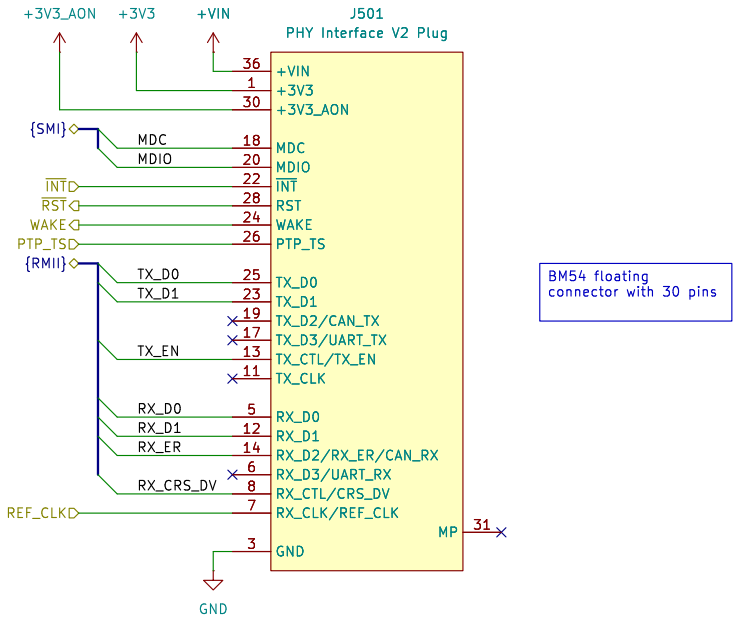

BM54 floating
connector with 30 pins

Sheet: /Host Connector/
File: host-connector.kicad_sch

Title:

Size: A4	Date:	**Rev:**
KiCad E.D.A. 9.0.7		Id: 5/6

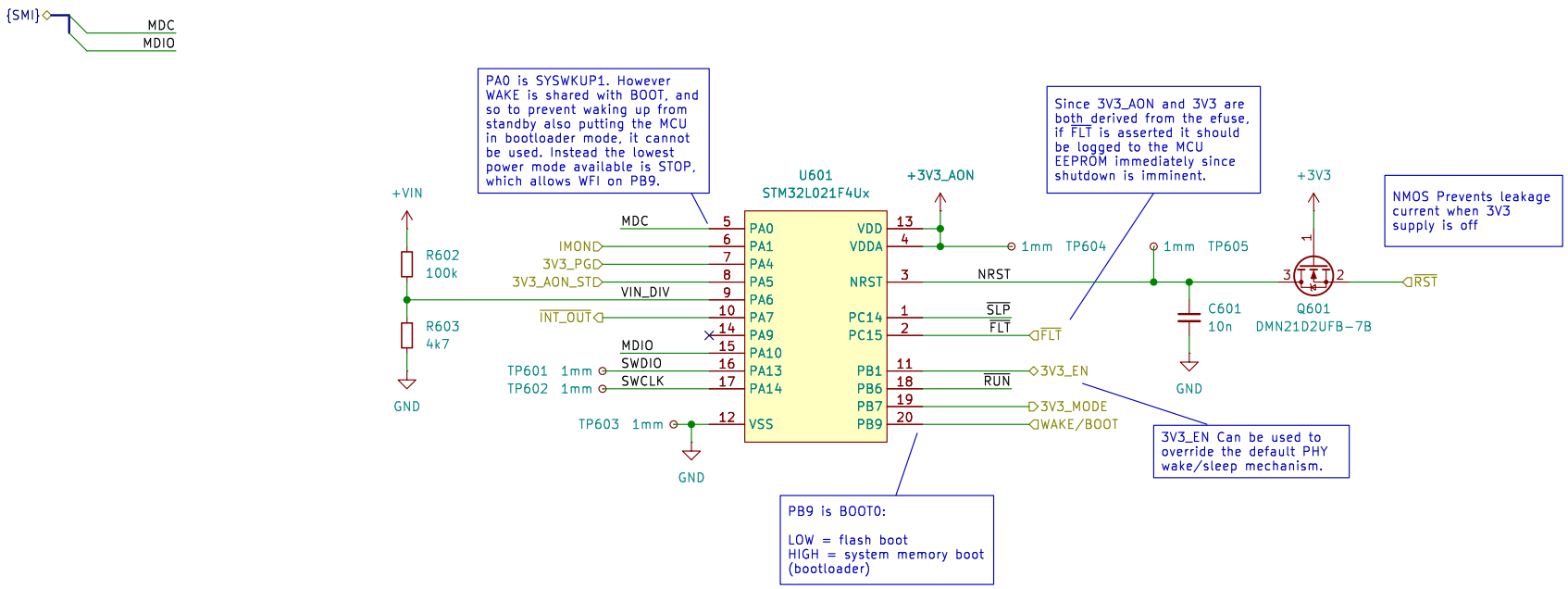

Indicator LEDs

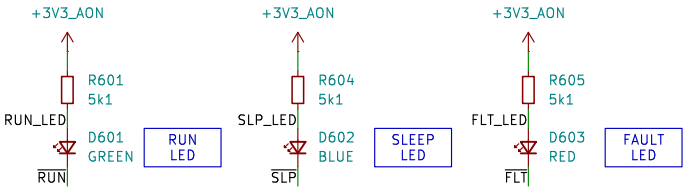

All LEDs should be connected to open drain MCU outputs.

Note: FLT is also connected to efuse OD output.

Decoupling Capacitors

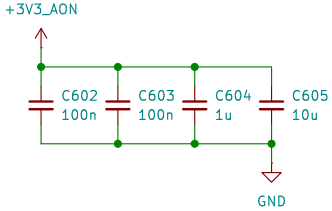

Sheet: /Microcontroller/
File: microcontroller.kicad_sch

Title:

Size: A4	Date:	Rev:
KiCad E.D.A. 9.0.7		Id: 6/6