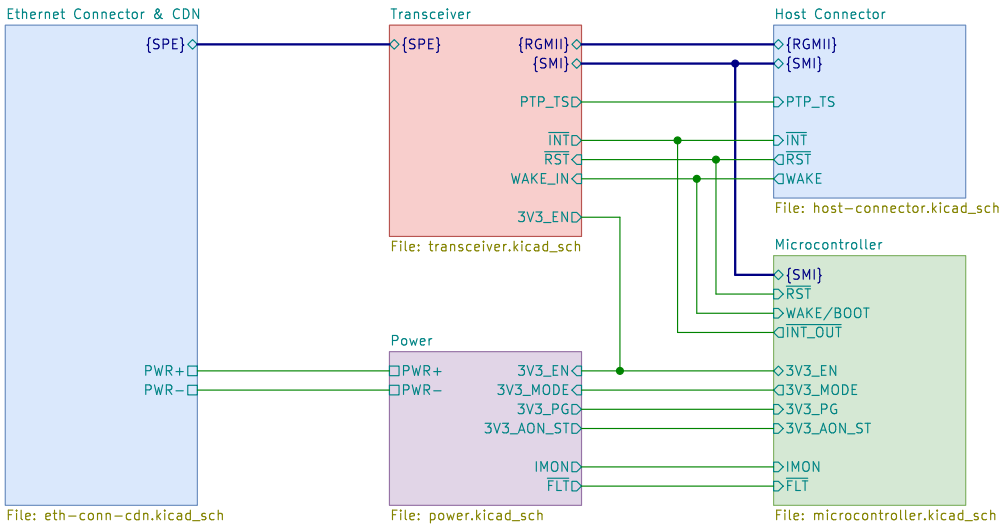

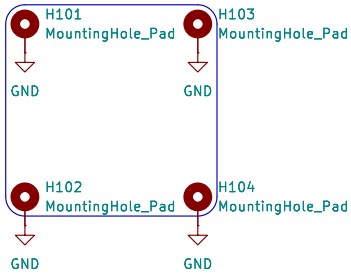

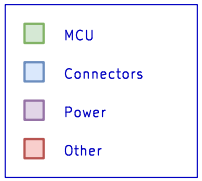

Sheet: /
File: phy−module−1000−base−t1−v1.kicad_sch

Title:

Size: A4	Date:	Rev:
KiCad E.D.A. 9.0.7		Id: 1/6

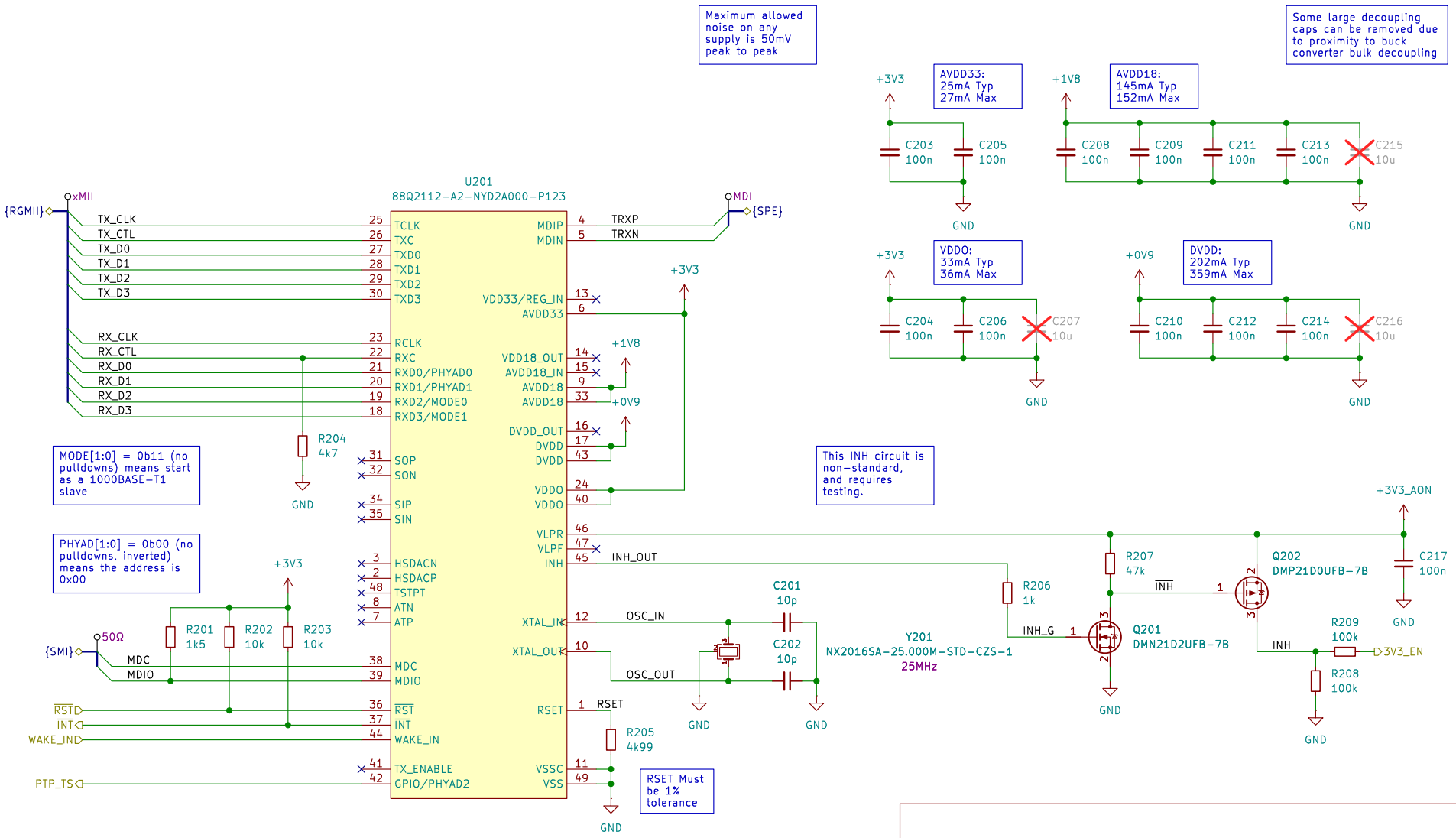

Sheet: /Transceiver/
File: transceiver.kicad_sch

Title:

Size: A4	Date:	Rev:
KiCad E.D.A. 9.0.7		Id: 2/6

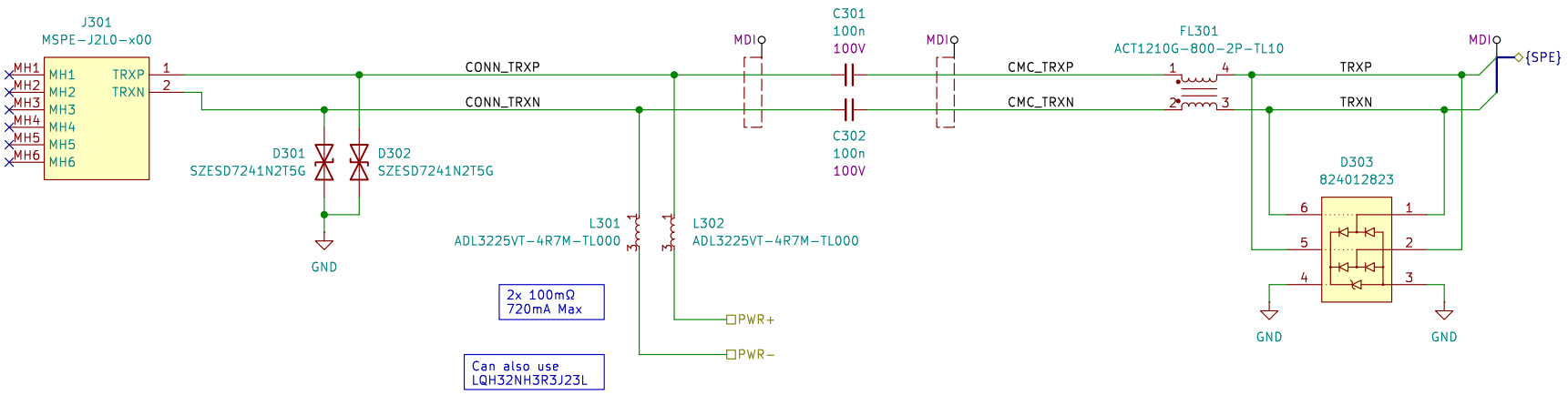

Sheet: /Ethernet Connector & CDN/
File: eth-conn-cdn.kicad_sch

Title:

Size: A4	Date:	Rev:
KiCad E.D.A. 9.0.7		Id: 3/6

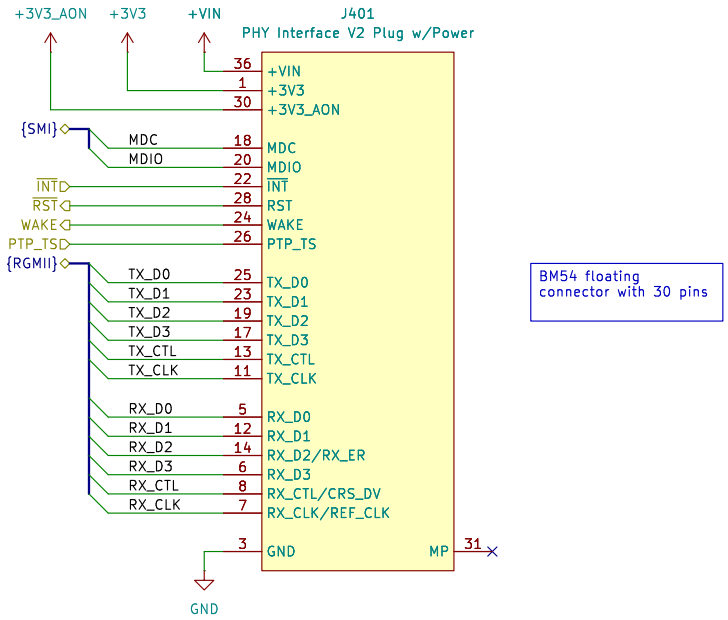

Sheet: /Host Connector/
File: host-connector.kicad_sch

Title:

Size: A4	Date:	**Rev:**
KiCad E.D.A. 9.0.7		Id: 4/6

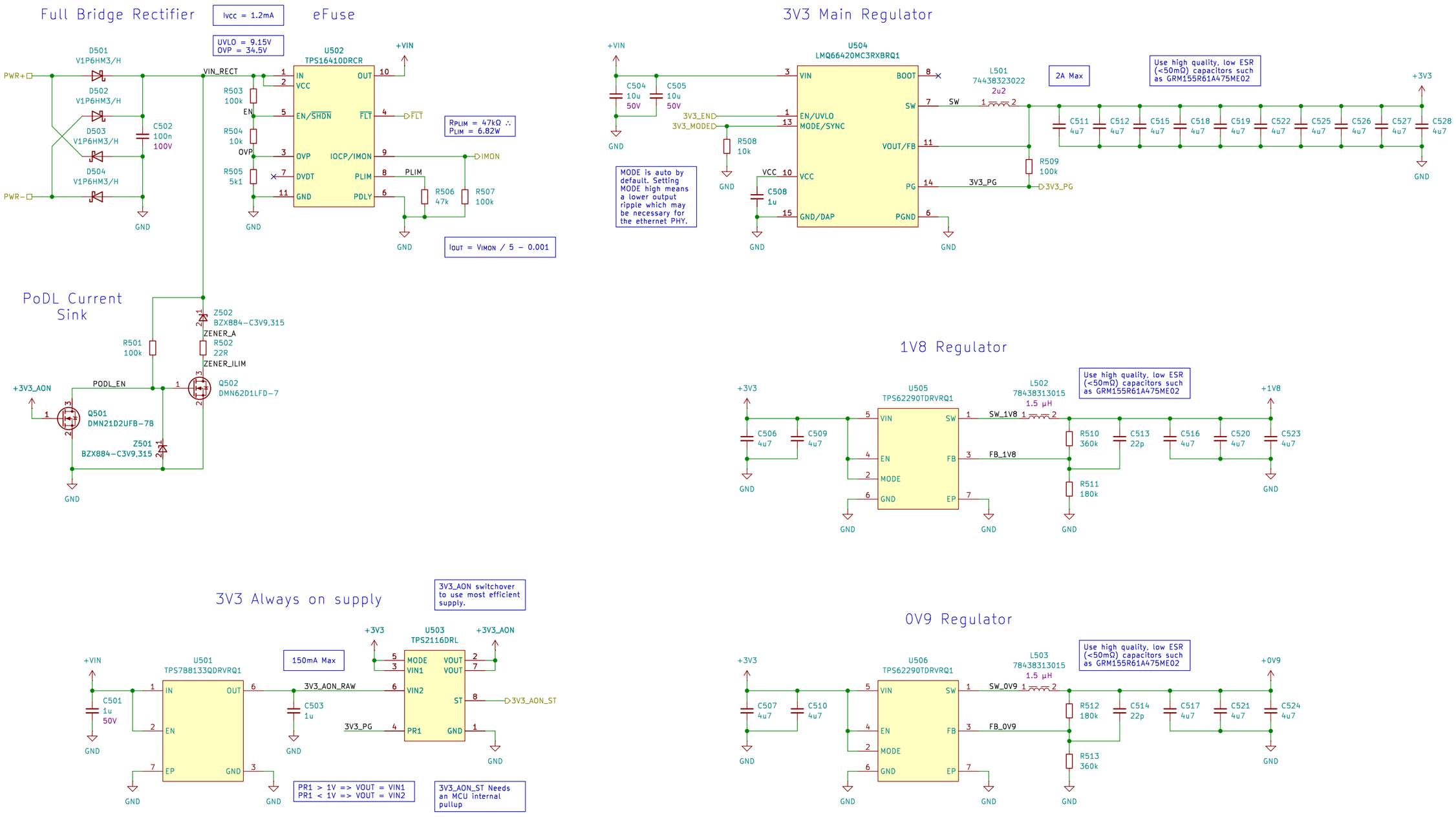

Sheet: /Power/
File: power.kicad_sch

Title:

Size: A3	Date:	Rev:
KiCad E.D.A. 9.0.7		Id: 5/6

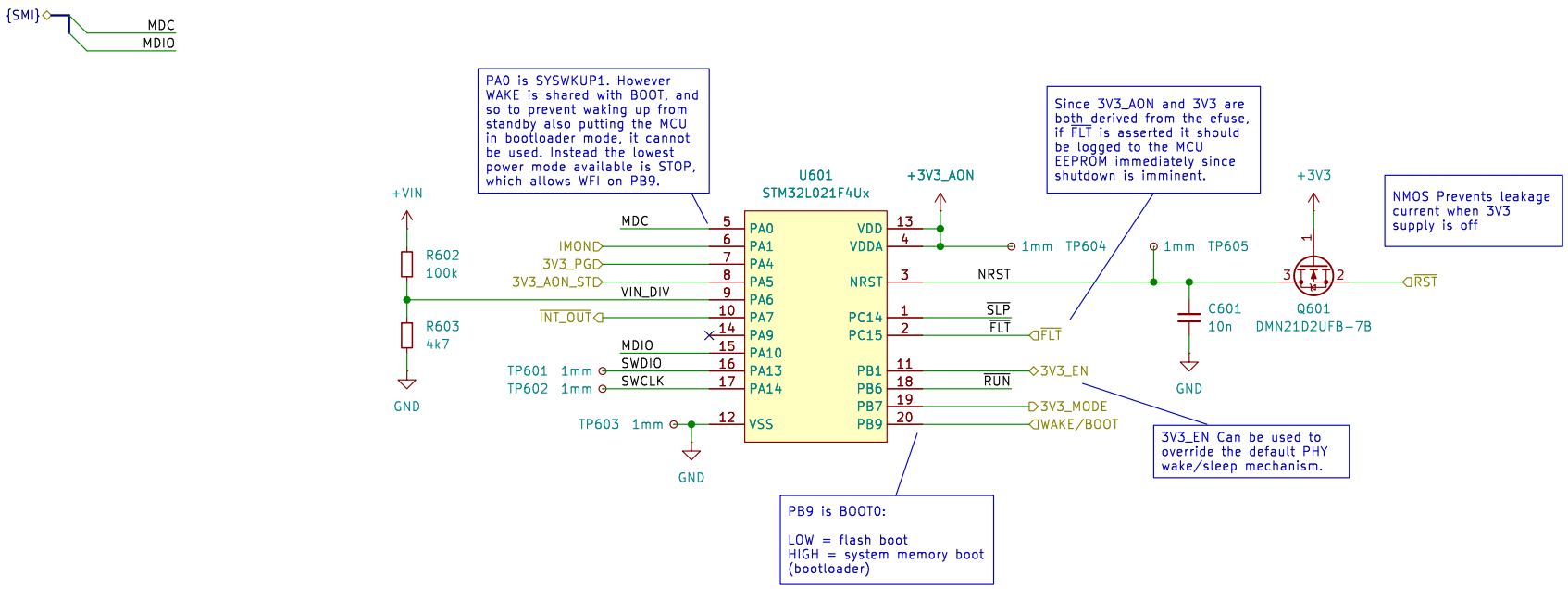

Indicator LEDs

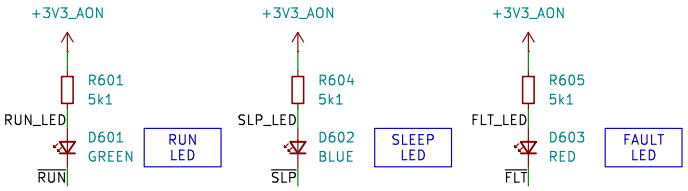

All LEDs should be connected to open drain MCU outputs.

Note: FLT is also connected to efuse OD output.

Decoupling Capacitors

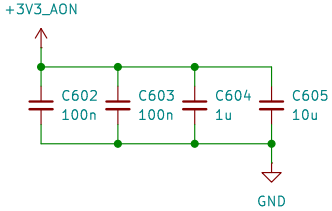

Sheet: /Microcontroller/
File: microcontroller.kicad_sch

Title:

Size: A4	Date:	Rev:
KiCad E.D.A. 9.0.7		Id: 6/6