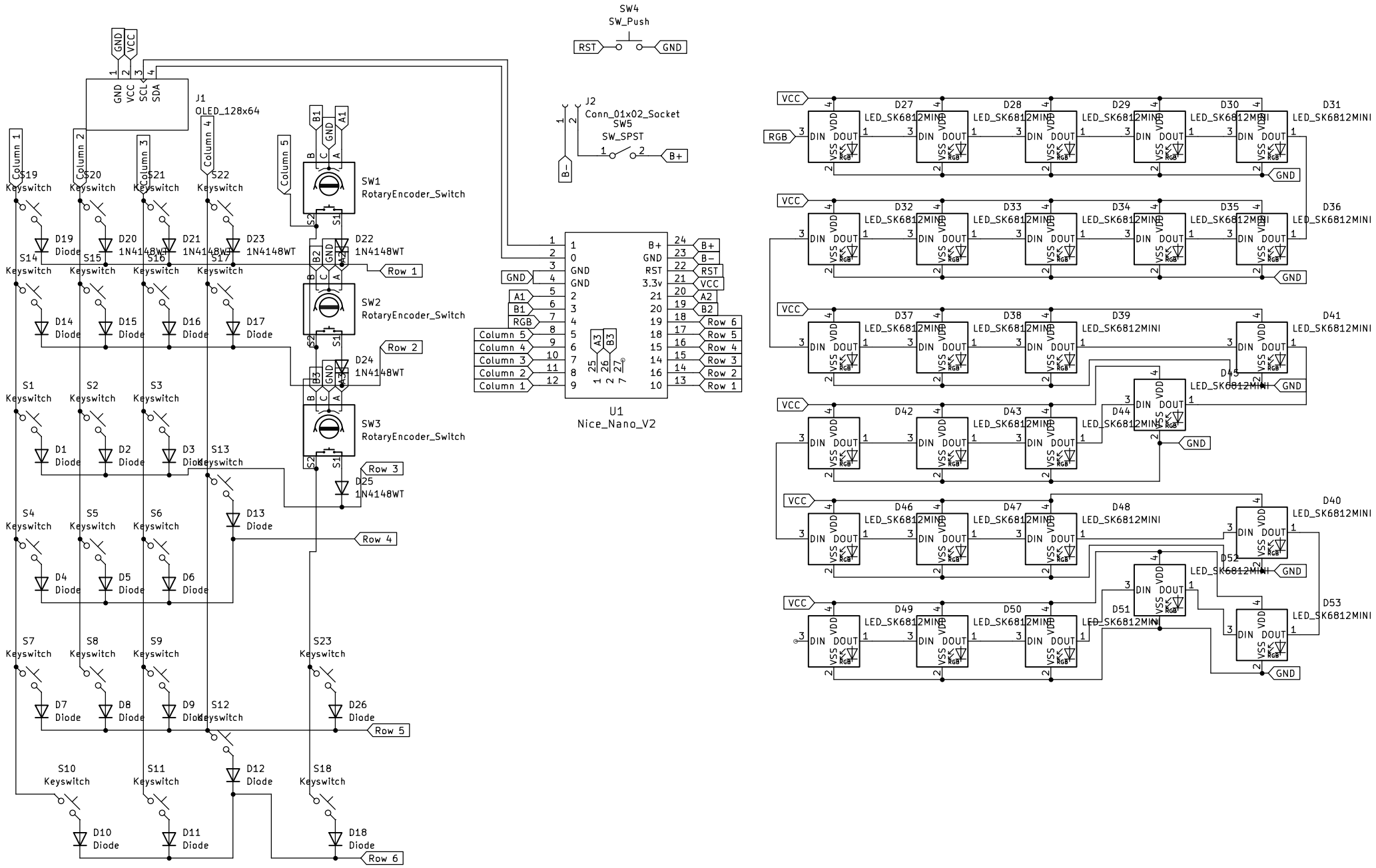
J1
OLED_128x64
GND
VCC
SCL
SDA
SW4
SW_Push
RST
GND
J2
Conn_01x02_Socket
SW5
SW_SPST
B+
B−
SW1
RotaryEncoder_Switch
SW2
RotaryEncoder_Switch
SW3
RotaryEncoder_Switch
U1
Nice_Nano_V2
Column 1
Column 2
Column 3
Column 4
Column 5
Row 1
Row 2
Row 3
Row 4
Row 5
Row 6
RGB
VCC
LED_SK6812MINI
DIN
DOUT
VDD
VSS