Longwall Standards and Operating Manual

Contents

1. INTRODUCTION 6
2. PURPOSE 6
3. SAFTEY 6
4. RISK MANAGEMENT 6
5. REFERENCES 7
5.1 NSW Legislation 7
5.2 Guidelines 7
5.3 Original Equipment Manufacturer documentation 7
5.4 Moolarben Coal Operations specific documentation 7
6. OPERATIONAL 8
6.1 Roles and Responsibilities 8
6.2 Longwall Engineer (Mechanical) 9
6.3 Longwall Process Coordinators 10
6.4 Longwall Maintenance Planner 11
6.5 Automation / Systems Engineer 11
6.6 LW Tradesmen 12
6.7 Production Shift Panel Deputy 13
6.8 LW Shearer Operator 16
6.9 LW Shield Operator 18
6.10 LW Maingate Operator 19
7. OPERATING STANDARDS 21
7.1 Working Culture of the Longwall 21
7.2 Maingate Roadway Standards 22
7.2.1 General Area from Crib Room Inbye 22
7.3 Longwall No-Go Zones – Shearer cut into MG 24
7.4 Longwall No-Go Zone – Shearer cut back to TG and MG bank pushed, shields 2, 1, 3, 4 advanced on sequence 25
7.5 Longwall No-Go Zones – BSL push after four MG shields advanced 26
7.6 Longwall No-Go zone – Mid Face cutting from MG to TG, and TG to MG 27
7.7 Monorail Area Standards 28
7.8 BSL, Boot-end and Gate-end Shields Area Standards 28
7.9 Electrical Area 29

7.10 Face Standards 29
7.11 General Access to Face Area 29
7.12 General Face Standards 29
7.13 Floor Horizon effect on Tip to Face clearance 30
7.14 Tailgate Roadway Standards 32
7.15 Longwall No-Go Zone – Shearer cuts into TG Roadway 33
7.16 Longwall No-Go Zone – Four TG shields advance in sequence 147, 148, 146, 145 34
7.17 Longwall No-Go Zone – Shearer cuts out of TG to MG 35
7.18 Crib Room Standards 36
7.19 Standard Maingate Roadway 38
7.20 (Diagram of Monorail Installation Layout – 5.4m wide driveage {full page for drawing}) ...39
7.21 Transformer Cut-through Standards 41
7.22 Travel Road and Cut-through Standards 43
7.23 Longwall Belt Standards 45
7.24 Longwall Isolation Standards 45
7.24.1 Key points and strategy 45
7.24.2 Isolation: 45
7.24.3 Emergency Stop: 45
8. LW CUTTING CYCLES 46
8.1 General 48
8.2 MAIN TO TAIL SEQUENCE 48
8.3 TG TO TG BUTTOCK SEQUENCE 49
8.4 TG BUTTOCK TO TG SEQUENCE 50
8.5 TAIL TO MAIN SEQUENCE 50
8.6 MG TO MG BUTTOCK SEQUENCE 51
8.7 MG BUTTOCK TO MG SEQUENCE 52
8.8 Shield Advance Methodology 52
8.9 Front Armoured Face Conveyor (AFC) Methodology 52
8.10 BSL Current Control Logic 52
8.11 Extraction Horizon 53
8.12 Creep Control 53
8.13 The Creep Standards 54
8.14 Target line 55

8.15 String Line 56
8.16 Signs for Trigger Points along the Face 56
9. CAVITY MANAGEMENT 57
6.11 Shield Pivoting / Punching into the Roof 60
6.12 Managing Leg Set Pressure 61
6.13 Straightening Shields 63
6.14 Anti-Topple Cylinder Logic 63
6.15 Dust Suppression Standards 64
6.16 Roof Support 64
6.17 Shearer 65
6.18 BSL/Crusher/Boot-end Insert Correct details 66
6.19 Electrical Scrubber 67
6.20 Ventilation Standards 67
6.21 Moolarben Coal Operations Ventilation Standards 67
10. ENGINEERING AND MAINTENANCE STANDARDS 69
10.1 Engineering Standards 69
10.2 Maintenance 70
10.3 Nominated Cutting Hours 70
10.4 LW System Engineering Availability 70
10.5 Productivity 71
10.6 Availability 71
10.7 Utilisation 71
10.8 Operational Standards 72
10.9 Plant Condition 72
10.10 Costs 72
10.11 Preventative Maintenance Schedule 72
10.12 Maintenance Work Load 72
10.13 Preventative Maintenance Schedule 72
10.14 Corrective Maintenance 73
10.15 Maintenance Organisation Structure 73
10.16 Resource Structure 73
10.17 Maintenance Planning System 74
10.18 Audit Maintenance System 74

10.19 Establish Measured Maintenance Performance Levels 74

10.20 Continuous Measurement of Performance Achieved using Actual Figures.....74

10.21 Comparison of Actual Performance Figures with Target KPI's 75

10.22 Identification and Implementation of Corrective Actions to bring the actual performance into line with agreed targets 75

10.23 Table of Reports.....75

10.24 Plant Register 77

11. COMMUNICATION.....77

11.1 Reporting Standards.....77

11.2 Reporting Face Information 78

11.3 Reporting Protocols.....78

11.4 Moolarben Coal Operations Unplanned Delay Procedure 80

11.5 Expected level of performance for each KPI 82

11.6 KPI Performance Review 82

12. AUDITING PROCESS 83

12.1 Internal Audit 83

12.2 Operational Audits 83

12.3 Maintenance Activity Audits 83

12.4 External Audit.....83

12.5 LW System Standards Operational Audit Forms 83

12.6 Appendix A – Definitions of LW Mining Glossary Terms 84

1. INTRODUCTION

Moolarben Coal Operations (MCO) is a large open cut and underground coal mining complex that extracts export thermal quality coal from the Ulan Seam near Mudgee in NSW. The underground mine will extract coal using the longwall method of mining and has approval to mine up to 8 million tons of ROM Coal each year. MCO is part of the Yancoal group of companies.

Moolarben Coal Operations undertook an extensive specification, tender and evaluation review process that resulted in the Caterpillar Global Mining company winning the contract to supply the Longwall Equipment package for the MCO underground mine.

2. PURPOSE

The purpose of this Standards and Operating Manual document is to provide a management framework that includes Operational Systems and Standards for the safe and efficient operation of the LW system at MCO.

The Standards and Operating Manual must be followed to ensure effective management of longwall mining processes including both Operational and Maintenance activities that are required for the safe and efficient extraction of Longwall coal at MCO.

These Standards and Operating Manual has been developed from experience, numerous risk assessments, Original Equipment Manufacturer (OEM) recommendations and consultation with members of the workforce who have operated longwall equipment at other Yancoal Operations.

The controls described in this manual must be stringently followed. If any change is required to be made to the normal operating cutting cycles and standards, then the changes will be made in a controlled manner using the risk assessment process outlined in the MCO change management process.

3. SAFTEY

Safety of all Personnel on the MCO site is the number one priority for all Moolarben Coal Operations Management, Employees and all Contractors.

4. RISK MANAGEMENT

To ensure the risk to all persons is as low as reasonably practicable, it is essential that all persons take preventative action to control hazards where they are found to exist. All personnel are responsible for identifying existing or potential hazards that are identified in the workplace, reporting to a Mining Supervisor and taking steps to minimise exposure of other workers or mitigate the risk by applying effective controls where possible.

The use of safety management tools that already exist (i.e Safe Work Instructions) or developing a safe way to manage tasks (i.e. JSA's, PRIDE) are the first steps to be undertaken before the commencement of any activities. This obligation lies with all persons, but it is the responsibility of the Panel Deputy to ensure this is implemented to ensure the safety of all persons.

It is better to stop a problem from happening than have an injury occur to a workmate or an incident occur on the longwall face.

Prevention is better than looking for a cure.

All Longwall personnel will be provided access to Longwall related documents in the following manner:

• The Moolarben Coal Operations Safety Management System and Link One parts information will be accessible from the – Pump, Face, CME, Tailgate and Substation Computers; and

• A selection of Hard copies of the generic Safe Work Instructions will also be kept in a folder in the Longwall crib room and Longwall Engineering office and Control Room.

Operational standards will identify and specify procedures for operation and maintenance that will allow effective and efficient control of the LW system.

The KPI's for the MCO Longwall are

- 70 % Utilisation
- 92% Engineering availability

In operating the MCO longwall system we will maximise seam recovery from the D working section without damage to equipment whilst ensuring maximum return on investment for Yancoal.

5. REFERENCES

5.1 NSW Legislation

- NSW Work Health & Safety Act (Mines & Petroleum) 2013
- NSW Work Health & Safety Regulation (Mines & Petroleum) 2014
- NSW Work Health and Safety Act 2011
- NSW Work Health and Safety Regulation 2011

5.2 Guidelines

- Department of Industry and Investment (DII) Mine Safety Guidelines

5.3 Original Equipment Manufacturer documentation

- OEM Manuals
- Revised Bill of Materials
- Technical data sheets from the Supply Contract
- Caterpillar training manuals

5.4 Moolarben Coal Operations specific documentation

- Moolarben Coal Operations Safety Management Systems including Principal Hazard Management Plans
- Moolarben Coal Operations SAP Reporting for work order completion and financials
- Moolarben Coal Operations Production and Maintenance Schedule
- Moolarben Coal Operations LW Operational Risk Assessment
- Moolarben Coal Operations LW Maintenance Specific Risk Assessments
- Daily Mine Operating (Pulse) system

- Delay reporting system
- Moolarben Coal Operations Training Manuals
- Moolarben Coal Operations Hazard Management Plan for that specific Panel
- Work Instructions
- Moolarben Coal Operations Coalmine Longwall TARP for Strata, Creep, Extraction Horizon, Strata Weighting, Shield Mechanical & Hydraulic System & Automation
- Moolarben Coal Operations Coalmine Environmental TARPs
- Moolarben Coal Operations Coalmine Gate Road TARPs

6. OPERATIONAL

6.1 Roles and Responsibilities

The Operational System for a safe working environment is essential for a productive workplace and aligning the underground operations to the mine business plan.

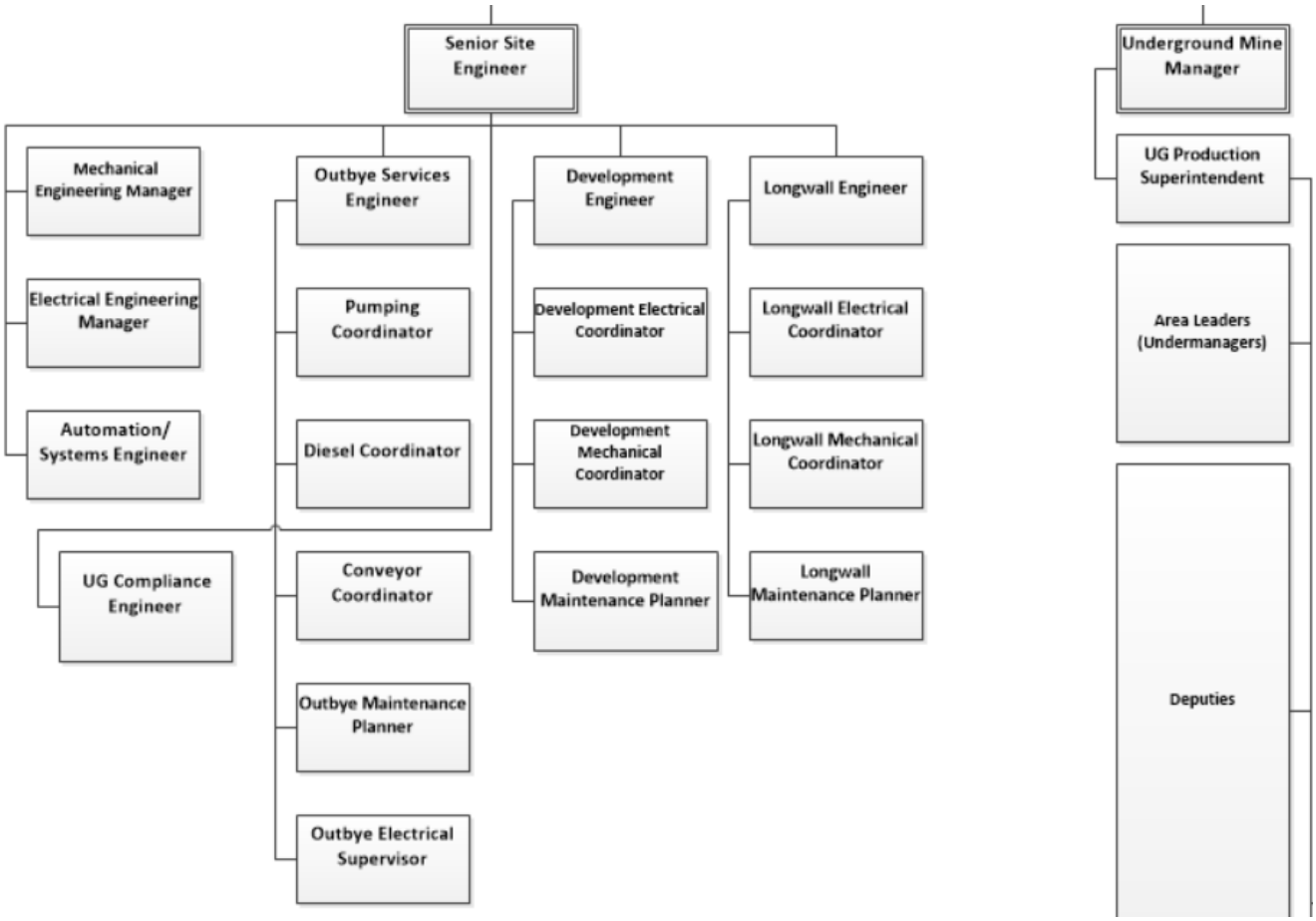

6.2 Longwall Engineer (Mechanical)

Responsibility to ensure the LW system operates safely at specified Engineering availabilities and work with the Production Manager to achieve utilisations that achieve the business targets for MCO. Manage the overall engineering and maintenance function of the LW system.

The LW Engineer will have responsibility for the overall supervision after consultation with Moolarben Coal Operations Senior Staff for the operations of the LW system, including all aspects of, cutting sequences, extraction height, and retraction of services, Longwall relocations and maintenance per Moolarben Coal Operations Equipment Life Cycle Management and Maintenance Strategy and OEM maintenance manuals.

The key operational responsibilities include:

- Manage the overall maintenance function of the LW system ensuring compliance with NSW Coal Mining Legislation, Moolarben Coal Operations Engineering Strategy and Standards, and Original Equipment Manufacturers Manuals.
- Overall responsibility for the LW System compliance with Moolarben Engineering Strategy.
- Responsibility to trigger a review of audits
- Develop the Daily, Weekly, three (3) monthly Maintenance plans for the LW system
- Ensure successful longwall maintenance day planning, resourcing and execution occurs
- Authority to facilitate development, review and authorisation of Safe Work Procedures
- To be ultimately responsible for the implementation and Maintenance of Automation of the LW face operations via the use of the Systems /Automation Engineer and the Maintenance team
- Duty to investigate any incidents that may occur in the LW system for compliance to the standards
- Duty to investigate any incidents that have occurred in the LW panel that may affect the Health and Safety of any person in that panel
- Duty to follow up reports and information relating to the LW system in Panel Deputies and Moolarben Coal Operations Staff reports that affect the performance and efficiency of the LW system
- Duty to have LW system operators trained and assessed to the Moolarben Coal Operations standard on the operation of the equipment and mining techniques of the LW system
- Develop and Maintain Capital and operating budgets for the LW System plant and achieve compliance to budgetary targets
- Ensure TARPS are up to date and relevant to the operating longwall
- Duty to investigate any incidents that may occur in the LW system for compliance to the accepted standards at Moolarben Coal Operations
- Duty to read all reports and information relating to the LW system in the Shift Undermanager's or Longwall Panel Deputy and shift tradesmen's reports
- Duty to have LW system tradesmen trained and assessed to the Moolarben Coal Operations standard on the maintenance, repairs and operation of the equipment and mining techniques of the LW
- Duty to review Engineering Availability and ensure compliance with availability targets
- Co-ordinate investigations into unplanned Engineering delays.
- Manage weekly maintenance planning and review sessions

6.3 Longwall Process Coordinators

There will be one Mechanical and one Electrical Longwall Process Coordinators dedicated to the LW system.

The Longwall Process Coordinators responsibilities include:

- Communicate the seven (7) day maintenance plan to Shift Engineering crew leaders and Longwall Tradesmen and assist in execution of the plan investigate any incidents that occur on the longwall that affect compliance to the maintenance standards.
- Follow up reports and information relating to the longwall in Mechanical and Electrical tradesmen's' reports and any relevant issues arising from the Deputies reports
- Promote automation of the LW face operations
- Assist in identification and delivery of training and assessment to longwall Mechanical and Electrical tradesmen to a safe standard on equipment maintenance and repair techniques
- Develop equipment improvements and efficiencies for the LW Kit. Overall operation of the maintenance and engineering issues for the LW panel and compliance to Moolarben Engineering Strategy as well as the OEM manuals.
- Review delays to analyse issues affecting production, and proactively manage maintenance
- Ensure all operations are carried out in accordance with the Safety & Health management system
- Promote and encourage the use of safety management tools by all persons working in the LW area
- Involvement in Auditing of Engineering Standards, and addressing any issues that arise from these audits
- Form a close working relationship with the Longwall Engineer, Longwall Maintenance Planner and Shift engineering crew leaders to maximise the efficiency of the longwall unit by coordinating all activities
- Report to the Longwall Engineer on compliance, standards, maintenance, and engineering issues which may affect or impact on the LW operations
- Communicate with Longwall Maintenance Planner and Shift Engineering crew leaders any issues which need to be actioned on the Longwall Maintenance Shift
- Performing Longwall Maintenance day planning, resourcing and providing underground supervision to ensure successful execution
- Plan, schedule and implement short and medium term tasks on shift
- Ensure minimum tradesmen requirements are met for safe efficient production
- Look for innovative ways to improve longwall operations
- Communicate with mine's Shift Engineering crew leaders any issues which need to be actioned on the LW shift plan
- Work with the Longwall Maintenance Planner to prepare daily, weekly, and maintenance work plans
- Perform Root Cause Analysis on delays during their shift to analyse issues affecting production, and proactively manage maintenance
- Communicate with the Longwall Maintenance Planner and Longwall Engineer to ensure all potential engineering issues are identified and appropriate action is taken
- Co-ordinate the use of resources with other users

- Provide realistic actions and feedback to incidents and suggestions
- Consult with the Moolarben Coal Operations staff with issues concerning LW Engineering

6.4 Longwall Maintenance Planner

The Longwall Maintenance Planner responsibilities include:

- Provide assistance with the work management master data, work planning, reporting and document aspects of the longwall
- Maintain longwall maintenance records and technical library as the NSW Coal Mining Act and Regulations, relevant Australian Standards and OEM Manuals
- Liaise with the Longwall Process Engineers to maintain correct standards of documentation
- Support the Longwall Process Engineers to plan, manage and execute all longwall maintenance tasks
- Delegate planned and unplanned tasks in an effective and efficient manner
- Ensure all work orders are completed to the correct standard of quality, timeliness, detail and coding in compliance with Moolarben Coal Operations site requirements and the O&M Guidelines
- Monitor work order completion and provide report to Longwall Maintenance Co-ordinator and Moolarben Coal Operations staff
- Facilitate the development of maintenance data to Moolarben Coal Operations SAP data base
- Facilitate the transfer of delay data from Moolarben Coal Operations CMO data base to Moolarben Coal Operations delay data base
- Work order document control, including producing work orders for preventative maintenance tasks and closing off completed work order
- Input all works arising from and work orders into the SAP system and plan their completion
- Ensure work orders are raised in SAP for all corrective maintenance task completed by shift tradesmen in the longwall. Utilising tradesmen's shift reports to collect this data
- Attend and provide input to daily, weekly, monthly and three (3) monthly planning meetings
- Prepare and distribute all maintenance and delay reports as request by Moolarben Coal Operations and or Moolarben Coal Operations staff

6.5 Automation / Systems Engineer

Reporting directly to the Site Senior Engineer duties include:

- Provide on-the-job technical expertise and support to ensure the success of the LW automation system
- Promote the use of LW automation and the implementation of an automation standard, to standardize automation across all crews
- Ensure the automation system is maintained to a standard that will achieve a fully automated Longwall Operation
- Develop a working relationship with the Longwall team personnel to provide support and ensure successful use of LW automation
- Auditing automation standards and usage and addressing any issues arising from these audits
- Implement and conduct training of personnel on LW automation

- Communicate with Longwall Engineers, Deputies/Undermanager's and crews any issues which need to be actioned relating to LW automation
- Assist Longwall process engineers to Investigate any incidents that may occur on the longwall relating to automation
- Develop and implement improvements to the LW automation system, after consultation with Moolarben Coal Operations Longwall team.
- Provide realistic actions and feedback to incidents and suggestions
- Consult with the Moolarben Coal Operations staff with issues concerning LW automation

6.6 LW Tradesmen

Electrical and Mechanical Tradespersons are utilised on LW face to perform planned preventative maintenance tasks and corrective maintenance tasks, also attending to equipment breakdown in a proactive diligent manner. Special knowledge is required for high pressure hydraulic work on the Longwall system; and High voltage electrics used on all motors and distribution systems.

The Mechanical and Electrical technician's priority is to see the LW face is operating. Completing the statutory work orders to the nominated MCO standard and MCO work orders concerning the safety and reliability of the equipment as well as being responsible for performing any routine servicing of the following items that cannot be carried out by mining technicians due to the additional skills required for:

- Electrical System
- Mono Rail system
- Hydraulic Pump Station
- Boot-end
- BSL
- Coal Dust Scrubber
- Crusher
- AFC
- Shearer
- Powered Roof Supports
- Any longwall work required to be done at the Moolarben Coal Operations and where special skills are required or other personnel are not available.
- Servicing shearer during shut-down periods and maintenance shifts
- Repairs of equipment
- Assisting the Longwall engineers plan any maintenance work that cannot be performed on production shifts
- Assisting in outbye repair work during shut-down times when longwall is stopped
- Testing and inspections as per maintenance schedules
- Check emulsion volume in pump tanks and record daily

The Mechanical and Electrical tradesman will also:

- Report to the Longwall Panel Deputy any impending breakdown condition that is noted and cannot be immediately fixed
- Inform Longwall Panel Deputy of any condition that needs immediate attention and stop and fix the problem
- Know the difference between repairs that need immediate attention and those that can be left for planned maintenance or shift end
- Make routine inspections of equipment requiring the special skills the tradesmen have acquired, without disrupting coaling operations
- Make proper use of and take care of the tools assigned to him and special tools required for the safe operation of the longwall face
- Keep notes on standard operating procedures that are of use and make suggestions as to their improvement
- Complete work orders assign to them for the shifts work
- Complete all documentation required of them to comply with MCO Engineering Management Plans
- Assist with production activities as required maintaining continuity of production, during crib breaks and after core activities have been completed.
- Keep good records of work completed and to be done on the appropriate reports that are part of the Moolarben Coal Operations Reporting system
- Use the training materials available to his advantage
- Inspect all Dust Suppression Sprays are operational, rectify if possible and report to deputy the sprays not operating.

6.7 Production Shift Panel Deputy

The Longwall Panel Deputy oversees the LW Production District and all activities carried in the production District during the shift. No major changes are to be made to the longwall operation without prior consultation with and approval from, Shift Undermanager who will consult with the Production Manager and Longwall Engineer.

The Longwall Production Panel Deputies responsibilities include:

- Responsible for the shift operation of the longwall, and the safety of people and equipment
- Report to the Shift Undermanager regarding any work completed on his shift, work required, supply status, conditions of equipment to be written in his report.
- Be completely familiar with the longwall operation in all its facets
- Ensure all operational procedures are correctly carried out.
- Organise production to allow for limited shift maintenance (eg. servicing, belt structure. removal, picks, etc.) to be carried out with the minimal disruption to production (eg. to maximise production uptime)
- Organise materials to be on the face in time for servicing and ensure all production equipment is left in safe/correct position

- Liaise with mechanical and electrical personnel to ensure smooth and efficient production from the longwall. Work which can be completed during production should be done at that time to avoid creating unnecessary stoppages
- Liaise with Longwall Engineering department to ensure an adequate supply of spares is maintained at or near the face
- Devote majority of time observing operations during both production and maintenance to assess improvements and make recommendations to his crew and Longwall Engineer Team
- Investigate and report any incident resulting in or may result in injury to persons or equipment
- During his shift, observe and/or record the following details of the longwall system:
- Horizon control status across the face - both roof and floor
- Condition of the roof in terms of the Hazard Systems and TARPS
- Condition of the floor in terms of strata and water
- Position of monorail beams outbye (preparation for next move)
- Condition of gate road as to support e.g. water, alignment etc.
- The position in metres of retreat of each gate road
- Measure the creep at regular intervals and plot on Creep Control Report
- The standard for creep control is 150mm either side of centre
- Complete the creep chart on the surface in Shift Undermanager's office at the end of shift
- Alignment of face supports as required
- Cause and duration of delays
- Start and finish position of shearer
- Numbers of shears taken
- Signs of abnormal roof conditions or weighting on face and evidence of weight (eg. yield valves); V shield information
- Alignment of belt and loading of BSL on belt
- Condition of sprays on shearer, shields and BSL and dust management and rectify sprays not operating.
- Report any damage to equipment not repaired during shift and reasons for damage
- Spares/supply status
- Personnel on face and assigned job
- Record documentation for recommendations to changes made to operation from the normal method
- Stone duster to be working always whilst coaling.
- Inspect tailgate for loose metal up to 100m outbye face
- Secondary support in both gate ends complies with the secondary support plans
- Ensure access to tailgate is available or restricted, when required
- Gas and Heat management including bag samples

- Liaise with oncoming Longwall Panel Deputy to brief him on the status of the longwall and any action required to correct faults and supply/spares conditions
- Ensure all inspections and reports for the area are completed during the shift
- Record the maingate and tailgate chainage on the Shift Report each time the maingate and tailgate roadway collapses in the goaf
- Set the safety and work standards and live them personally
- Develop and coach crew members
- Ensure team works well together
- Ensure team works well with other departments
- Take responsibility and make decisions supporting the safety and wellbeing of the men and equipment
- Ensure machinery is cared for
- Communicate and motivate the crew:
- Conduct toolbox talk with crew in a professional and enthusiastic manner
- Listen to crew and plan together
- Regular feedback on team progress
- Ensure the next shift has a “press-button start” (eg. supplies, ventilation, hoses, oil and picks at the face, structure out if needed)
- Be aware of other activities in the district and maintain focus on the daily plan
- Collect the Daily Plan at the pre-shift meeting. Read to understand the “Targets” for the shift. Ask questions of the Shift Undermanager if instructions are not clear
- Crew to be ready for Tool Box Talk at the start of shift
- Travel directly to the panel unless instructed otherwise
- Hot seat change-overs are to take place at the face D/S to N/S
- Ensure Maintenance set up is achieved as per plans
- Read reports and sign, communicate relevant information to the crew
- Manage the shift activities in a planned and organised efficient manner so delay times can be greatly reduced
- Measure the creep every shear and plot on Creep Control Report. The standard for creep control is 150mm either side of the creep centre line in the maingate
- Implement Target line when required, or at least once per shift to align the shields, or perform a fly cut
- Ensure the shearer is graded into and out of the maingate and tailgate as per the designed extraction horizon
- Check the Shearer Operators are cutting to the correct horizon “it is critical that we follow this horizon”
- Fill out accurate reports with the appropriate delay code including the cause of the delay, the time it occurred and duration - fill out as much accurate information as possible

- Check alignment of shields; no shields are crossing under or over the others especially at the tailgate grade roof onto tailgate and maingate
- Look for and report guttering abnormal roof conditions in both gate and along the face
- Read Tell-tales in the Production district and record on reports
- Do not allow crew to operate all shield functions from the MG face CME as the shield operator needs to be on the face checking the shields are functioning as required.
- Ensure the maingate and tailgate shields are kept in line and the ends of the face does not lag backwards
- If any changes are to be made outside the normal operating parameters, follow the change management process for MCO, complete the form and communicate the change to all personnel after consultation with Undermanager
- Regular report to Shift Undermanager and Control Room Operator
- Ongoing facilitation of crew member training is to achieve a full complement of skilled operators are always available - this will include rotating operators into the production crew

- Brief your crew on the maintenance plan expectations, safety issues, tool box talks and any other issues affecting maintenance shift.

6.8 LW Shearer Operator

The LW Shearer Operator must:

- Ensure he has dust masks and other dust protection
- Sign out the Shearer TX radio - ensure it is charged and function tested Sign TX Log
- At end of shift the Shearer TX radio is to be returned to the charging station and put on charge and sign log
- Speak to off-going shift to ascertain if problems need to be fixed on the face
- The shearer radio TX will be transported from the surface to the longwall face and returned to the surface at shift end and shall remain turned off whilst in transit
- Shearer radio TX to be transported to and from face in the prescribed transport container
- The shearer radio TX shall be placed in a secure location (not on the bretby) when not in use and will remain the responsibility of the Shearer Operator all the time
- Inspect roof/face for poor conditions at start of shift preferably with the LW Shield Operator Complete pre-start checks on the shearer
- Inspect line of AFC to see if it is level or grading in the correct design parameters (a rising AFC may need to be pulled back and floor recut, if dipping the horizon must be corrected slowly by first levelling AFC then gradually rising)
- Read the horizon information on the pan line across the face when signing on to operate the shearer at the MG CME
- Operating position - in the walkway on the maingate side of advancing shields – positions may vary due to conditions, refer to ‘no go zones’
- Ensure Main and Tailgate flippers are retracted in advance of shearer.

- Maintain roof cut in accordance with designed extraction horizon instructions – the Production Manager regularly reviews seam thickness data and expected mining conditions and nominates the setting of drum heights relative to the Roof marker band on the Authority to Mine.
- Floor trim and clean-up to achieve target horizon as specified in the standard design extraction instructions or specific fault grading instructions
- Ensure shearer bretby runs in trough and where looped does not fall over face side (especially face ends and mid face)
- Inspect cable/hose entry to shearer regularly
- Inspect flow meters regularly for water discharge
- Back flush filter as required by MG personnel
- Inspect picks and sprays twice per shift (at more regular intervals if cutting stone)
- Check oil levels during normal running but especially while at maingate
- Check lubrication tanks have oil in them to allow lubrication for the Jumbo track system and shearer down drives
- Clean the top of shearer of debris to avoid heat and dust problems at opportune times during delays
- Always take the shearer completely to the electrical stop at face ends to keep the bretby pulled out to correct length
- Maximise shearer speeds by using the 'State Tables'
- Regulate the cutting speed according to face and roof conditions and AFC loading requirements
- Limit standing on the tailgate side of shearer in dust, move to clean air
- Inspect jumbo track for abnormal noise or wear and report problems
- Ensure all external sprays are operating correctly
- Check grading of roof and floor continuously and correct grades especially in the ramp areas on the face. Use Shearer inclinometers to gauge grades (maximum cut change is 100mm) this will provide three (3˚) degrees on the pan line
- Always cut maingate floor to level of maingate road (top of maingate cutter drum to align with BSL height indicator) and grade face line floor and roof gradually to this level. Tailgate drive must be cut using automation or to the reflective droppers which will ensure 3.3m height is maintained if out of horizion
- When using horizon control, no more than 50mm change in floor horizon from one cut to the next
- Report malfunctions of equipment immediately, if you cannot fix.
- Inspect canopy to drum clearances continuously
- Always inspect pan angle as it will affect shearer level, no more than three (3˚) degrees
- Report delays and faults to the Production Panel Deputy and tradesmen and to the maingate operator
- Speak to oncoming shift and complete face information white boards at the maingate in regard to potential problems prior to leaving face
- Monitor face conditions and manage in accordance with strata control TARPs
- Never cut more than 10 shields in front of last advanced shield

- Assess cut-out at maingate and tailgate and adjust 'creep' to ensure optimum cut-out
- If problems are found and they cannot easily be solved, tell Longwall Production Panel Deputy or Undermanager, it is better to correct problems early
- Shearer operator is not to load a stopped AFC that will cause the shearer to bulldoze the coal along the AFC
- Assist tradesmen with maintenance and breakdown activities
- Complete operational maintenance task involving the shearer

6.9 LW Shield Operator

The support control system allows automatic operation of the roof supports and this can assist with the face operation giving the LW Shield Operator time to assist in the following tasks:

- Ensure shield electro-hydraulics are operating correctly, including SRB, batch and adjacent hydraulics; report faults immediately
- Check lights on PMCRs are operating correctly and indicating functions
- Inspect V-Shields screen for faults, logs, etc., report problems to tradesmen and LW Deputy
- All supports should be set correctly; report any shield not setting with the leg set operating to the tradesmen and Longwall Deputy
- Inspect roof conditions; confer with LW Shearer Operators where corrections are required
- Ensure canopy tips are set to roof; legs to be set to full pressure manually if necessary
- Ensure top of canopies are clean and aligned to next shield canopy
- Flippers are operating correctly (only for Maintenance Tasks) normal operation they are locked in retracted position
- Maintain ‘no go zones and restricted zones’ along face and around shearer
- Maintain visual contact with the Shearer Operators
- If support LAS cycles are slow; contact Shearer Operators to slow the shearer hauling speed, then contact tradesmen to investigate problem it may mean a pump is off or the filters on the roof support need cleaning
- Inspect floor conditions; if pans are not level, inform LW Shearer Operators, pull pans back and cut floor again if greater than four (4˚) degrees
- Inspect relay bars, pins, in shield and inter-shield hoses/cables; fix problem if possible or report problems to tradesmen
- Inspect yield valves on shields; if weeping, check the gauge, report any leaking yield valves or gauges reading zero
- Inspect for leaks on all hydraulic hoses, valves cylinders, etc. and inform tradesmen immediately. NB. Do not check with hand
- Report to the tradesmen any damage to sleeving on hoses
- Ensure shield advance is over the shearer, and if not, stop shearer until support operation has caught up, especially in weak roof

- Check shield alignment; straighten face using a string line target line as required or once per shift. the face should be re-aligned every maingate to tailgate run manually
- Monitor creep of the face each shear; creep should be zero +/- 150 mm
- The angle of movement of shields to AFC is critical; shields must be kept square to AFC or this may increase creep
- Maintain cleanliness standards of the face and the special gate-end shields
- Bretby trough is to be cleaned
- All cable dagger plates on AFC goaf side are to be in place
- All AFC bretby spill tray retaining clips to be in place
- Snake must not be less than thirteen (13) pans
- Walkway to be kept clean
- Shields to be kept clean; hose as required
- Inspect shearer cable, water hose and bretby anchor regularly
- Inspect bretby midpoint anchor
- Inspect shearer bretby regularly, check for missing retaining clips and joint pins, and biscuits keep trough clear of debris
- Always stand on maingate side of shearer for normal face operations
- If any hazardous problems occur on any shield the following action is to be taken:
  - Push red button on PMCR (Emergency Stop)
- If any hazardous problems occur on the BSL or AFC, the following action is to be taken
  - Push red button on AFC lockout system
- Investigate, report and document problems
- After rectification, test run the equipment at least 1 full revolution then recommence production
- Understand the shield functions, use them to correctly to manage roof support operations
- Report to Longwall Deputy any problems that occurred during the shift
- Speak to oncoming shift and complete face information white boards at the maingate regarding potential problems prior to leaving face
- Assist tradesmen with maintenance and breakdown activities
- Inspect dust suppression sprays are operational and report to Deputy and tradesmen sprays that are not operating.

6.10 LW Maingate Operator

The LW Maingate Operator must:

- Turn water on/off at shift change if oncoming crew not on the face.
- Ensure hydraulic pressure is maintained to face, by checking pumps are operating on VD screens
- Check tank levels on VD screen regularly
- Remove monorail beams, chains and monkey brackets as required and stow in designated cassette

- Inspect monorail position and equipment for snags, twists, connections and alignment
- Clean in front of monorail pumps modules prior to advance and inspect for rib clearance, check clearance to the belt structure during advance
- Check flexible travel section of the monorail outbye of the DCB has enough travel for ten (10) pushes at the SOS
- Check the boot-end immediately at start of shift and after each move of the BSL
- Pushing the BSL is a two (2) man task as a man is required at the boot-end to accept the push sequence, this man then observes the mono rail loop next to the bootend movement, the BSL push over at the boot, mono rail beam clearance to BSL motor / gearbox. Then move the DCB outbye after the Push
- Ensure all dust suppression sprays are operating
- Check for dust build up on top BSL and clean regularly
- Check BSL top covers are closed and sealed
- Ensure dust scrubbers are operating
- Back flush dust scrubber gauzes at least once per shift
- Removing belt structure should be carefully planned with face operations and don't remove more than two (2) bays at a time, check that the last belt stand has a return roller on it and reset belt guard system to tension position
- Boot is to be correctly levelled and lined after each advance and face pushed with and without coal flow
- Check monorail push arm attachments to BSL are aligned for a straight push on the monorail regularly as alignment is critical (adjust if required)
- Cables and hoses on BSL to be fully enclosed in trays and all trays to be closed, inspect at pinch points
- Inspect BSL, crusher, maingate drives, maingate special shields and transition shield regularly and regularly clean all dirt and debris
- Inspect boot-end scraper regularly
- Clean under boot-end as required
- Inspect adjust and clean BSL Plough as required
- Inspect hoses and cables to No.1 shield in bretby to ensure they are not likely to be damaged
- Inspect buttress shields for clearance in low roof areas
- Inspect and remove as required the hand rails from the walkways on the maingate drive unit in low roof areas
- Secondary support to be set at cut-through at least 20m prior to face reaching cut-through
- All rubbish, empty tins, drums, paper, etc. to be tidied up from maingate and put in rubbish bins
- Inspect maingate face rib side at boot-end for tramp metal during the structure removal, shearer may pick this up and throw it
- All belt structure to be removed from maingate and placed in pod in outbye cut-through
- Brattice wing between No.1 shield and rib to be advanced each shear

- Inspect fire depot and extinguishers daily
- All communications to be functioning
- Inspect belting for wear, clips, tracking, damage, tension and loading
- Investigate abnormal noises or smells urgently and report to Longwall Deputy and tradesmen
- Assist tradesmen with maintenance and breakdown activities

7. OPERATING STANDARDS

Operating Standards have been developed for key areas of the LW System to ensure operational systems are controlled and operated to a consistent standard over all shifts by all personnel.

Operational personnel will be trained in these Operational Standards and will be expected to maintain and operate under the Operational Standards at all times to maintain a consistent regulated coal flow that matches the belt capacity.

No variation will be acceptable from these Operational Standards unless the Production Manager, Longwall Engineer has been consulted, with agreement, then changes will be assessed using MCO Change Management and risk control principles.

Longwall crew members and staff will be notified of any changes to procedures and a crew Tool Box Talk will be issued. It will be the responsibility of the crew members to become familiar with the Operational Standards and changes to those Operational Standards.

An audit process is in place to maintain the Operational Standards in the Standards and Operating Manual.

7.1 Working Culture of the Longwall

Overview

SYSTEMS	**.....**	**SAFE**
STANDARDS	**.....**	**RELIABLE**
DISIPLINE	**.....**	**PRODUCTION**

The Moolarben Coal Operations requires active involvement in the operations of the longwall in both production and maintenance to ensure targets are achieved.

Operational Standards can only be achieved with the longwall crew taking ownership of the longwall panel and ensuring Operational Standards set out in this Standards and Operating Manual are achieved and actively contributing to the LW System Management.

Success in the longwall panel reflects culture not only for the longwall personnel but the whole mine.

The following is required of all persons in the longwall department, supported by other mine personnel and contractors, we must:

- Adopt the longwall panel as our own
- Carry out works as though it was our own business
- Think about how we are affecting the overall cost of producing coal with any actions taken
- Use your own initiative to recommend improvements to safety and production

- Do not accept poor standards – fix the problem or find a solution
- Where within your capabilities and area of responsibility, rectify work issues immediately – repair rather than passing or reporting it to someone else
- When we have a spare moment – ask ourselves – what can I do to improve the standards of my work place, or what can we do to prevent a stoppage to production when it recommences
- Remember, every action we take will affect our workmates in a positive or negative way

The following items are considered in the Operational Standards:

- Maingate Roadway, refer to Maingate Roadway Audit Form
- Face, refer to Face Audit Form
- Tailgate Roadway, refer to Tailgate Roadway Audit Form
- Crib Room, refer to Crib Room Audit Form
- Transformer and Pump Station, refer to Transformer and Pump Station Audit Form
- RTVTR and Cut Thru, refer to RTVTR and Cut-Thru Audit Form
- Gate Belt Road, refer to Belt Audit Form
- Monorail and Roadways within 800m of Face line Audit Form

7.2 Maingate Roadway Standards

7.2.1 General Area from Crib Room Inbye

- All personnel entering the LW district must inform the Longwall Deputy they wish to enter the production face area, either from the Crib room VAA and/or the Bootend VAA
- The maximum number of men in the LW Panel is NOT to EXCEED the number of hooks on the longwall entry tag board
- The maingate area is to be kept clean, this is the main access way to the face and is therefore an area of potential injury
- Chainage tags on the ribs at 5m intervals
- All rubbish is to be removed from maingate roadway and stowed in the cut-through or loaded into rubbish bins/bags for removal to the surface
- All unused hoses on the monorail or in the cut-through are to be rolled up and stowed in correct storage areas
- Shovels and belt structure recovery tools stored at the belt bridge at the boot-end
- All lifting equipment for the maingate area is to be returned to the dedicated lifting gear storage area for the LW unit
- All tradesmen's servicing tools and equipment is to be stowed in correct storage locations
- All monorail beams, chains and monkey brackets to be stored in the correct storage cassette on the monorail and transported to the outbye installation Malibu during maintenance periods or delays to production periods
- Water holes to be pumped into pump line or a pump pod, do not pump onto the belt as spillage is caused in the Ramp and Stacker conveyors.

- ‘Personal Danger’, ‘Out of Service’ and ‘Information Tags’ are to be kept on transformer, pump and face DCB’s
- All hoses and valves to have ‘Identification Tags’
- Areas of poor roof and rib are to be re-supported and secondary support installed to secondary support standard
- Breaker line Link-N-Locks or other approved support must be installed across cut-through entrances as per standard 20m prior to face arriving
- Fire Depot and First Aid equipment on monorail is to be accessible all the time
- Horizon Indicator for the shearer maingate drum operator will be the ‘Budgie Perch’ on the BSL, this indicator is 2.2m (cutter drum diameter) above the bottom of the BSL to assist with maintaining the correct face to maingate floor horizon
- Horizon indicator is to be cleaned and clearly visible on the BSL all the time
- Creep line must be painted on the roof from the face to a minimum of 100m outbye of the face
- Creep indicator must be cleaned and visible on the BSL outbye of the Maingate drive at all time

7.3 Longwall No-Go Zones – Shearer cut into MG

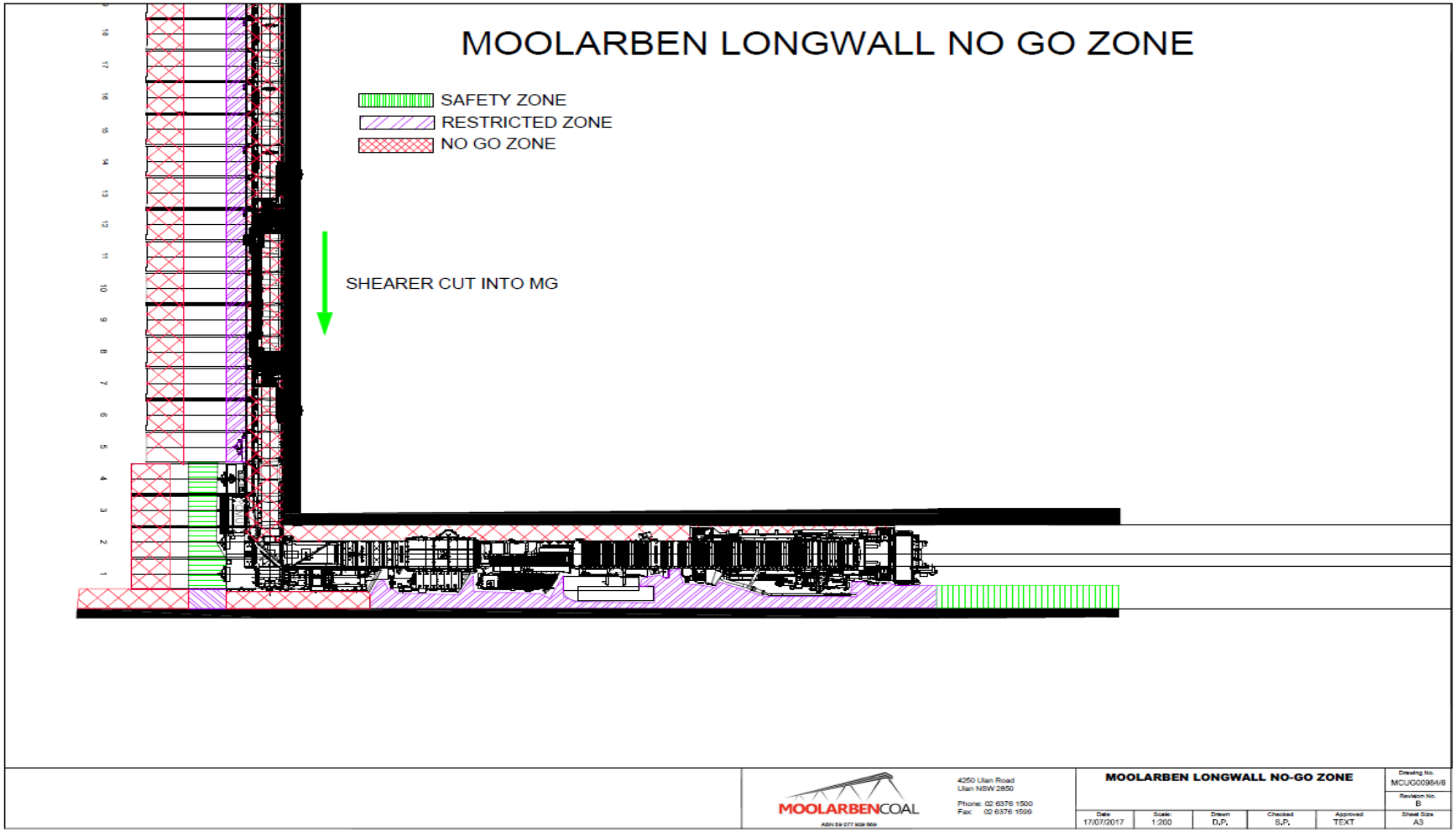

7.4 Longwall No-Go Zone – Shearer cut back to TG and MG bank pushed, shields 2, 1, 3, 4 advanced on sequence

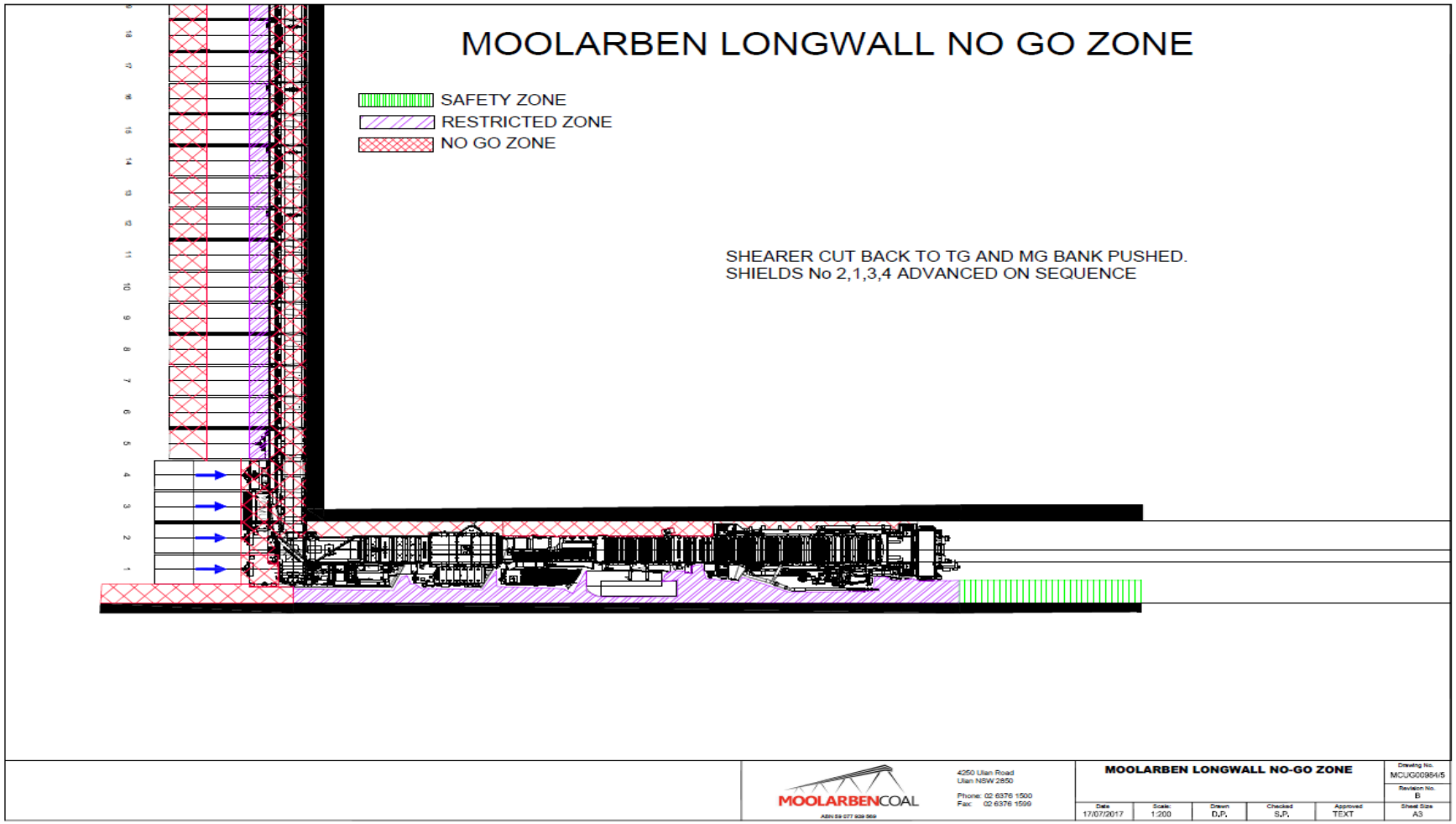

7.5 Longwall No-Go Zones – BSL push after four MG shields advanced

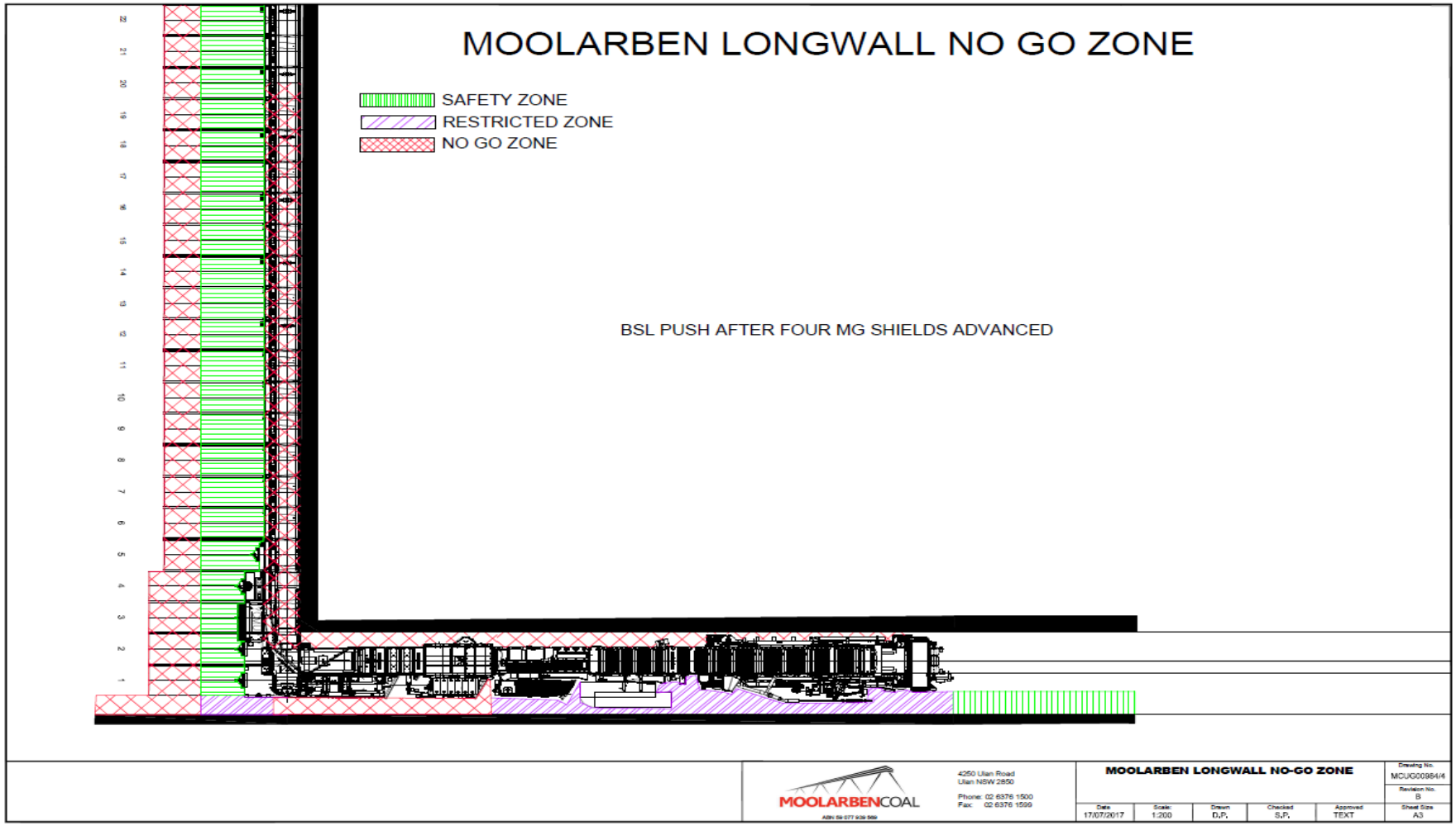

7.6 Longwall No-Go zone – Mid Face cutting from MG to TG, and TG to MG

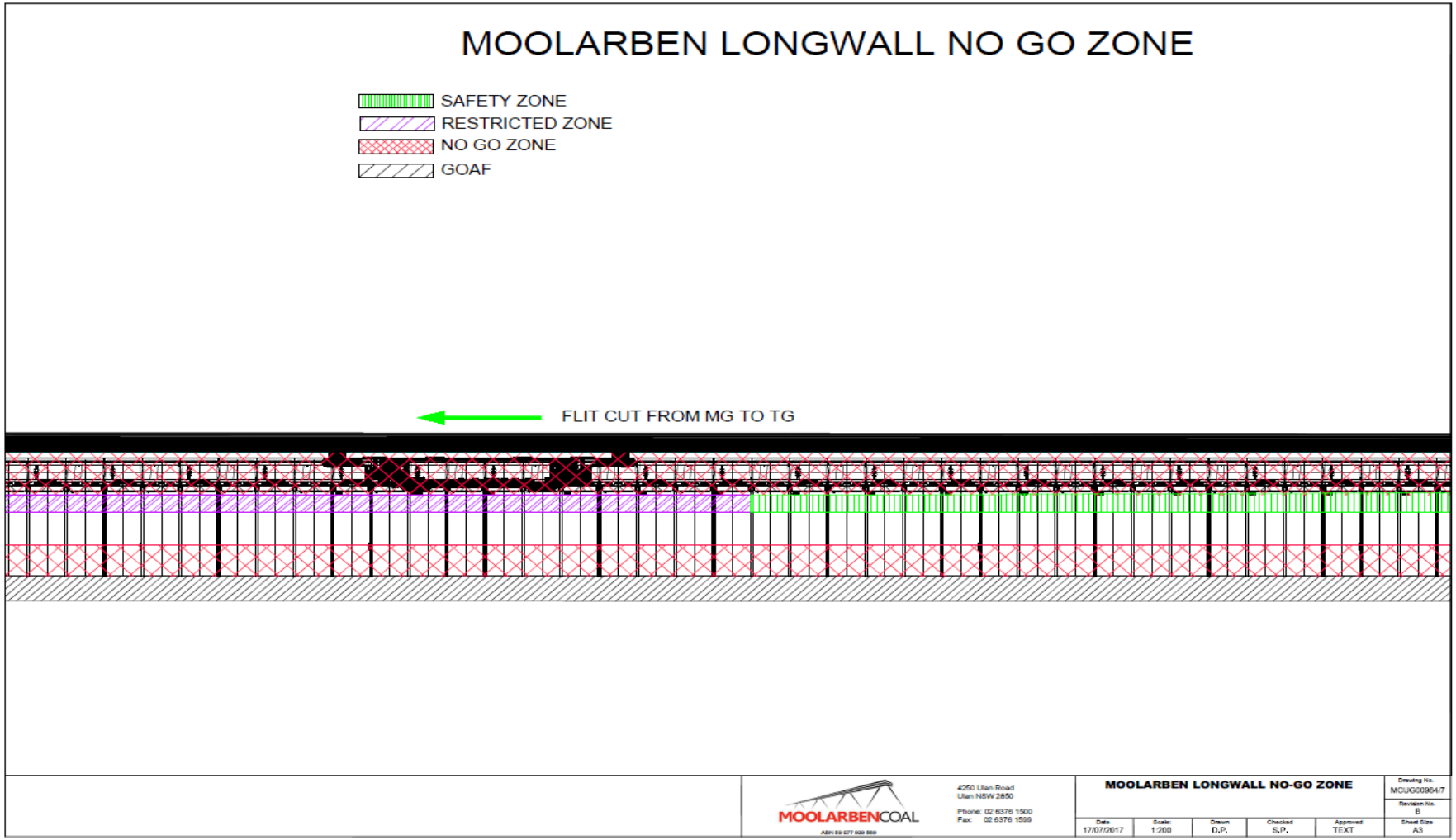

7.7 Monorail Area Standards

- Monorail chains and brackets to be placed on monorail mounted storage cassette when removed from roof to ensure the walkways are clear for travel
- Monorail brackets are to be recovered after the beam and chain have been removed and placed in the cassette
- Monorail beams are to be stowed in monorail mounted storage cassette
- Monorail cassettes to be emptied by loading onto belt, then run outbye and stored in the installation Malibu during maintenance period or down time
- Compressed air rattle gun and extended roof bolt nut dolly to be set up for use on the monorail retrieval platform
- BSL mounted monorail retrieval platform is to be fully retracted after removal of the beams has taken place so access is available past this area in the maingate
- Monorail installation platform (Malibu) to have the clearance template positioned so any protruding bolt tails are removed before advancing to the next beam installation.
- When installing monorail brackets the distance from last monorail bracket (2000mm) and distance from adjacent rib (900mm) is to be checked with a measuring stick
- Compressed air operated saw to be set up at the installation Malibu whenever installation of monorail beams is in progress

7.8 BSL, Boot-end and Gate-end Shields Area Standards

- Anti-topple cylinders must be used to maintain correct spacing between shields #146, #147, and #148
- Clearances to be maintained between underside of Maingate Shield canopies and AFC components
- Clearances to be maintained between underside of Tailgate Shield canopies and AFC components
- BSL, Crusher and DCB kept clean of rubbish, materials and dust
- Dust cover on BSL/Boot to be kept closed when producing coal
- Belt structure to be loading onto belt, then run outbye and loaded into belt structure transport pod during maintenance period or down time
- Boot-end to be kept clean and aligned correctly to belt
- BSL and Crusher and AFC maingate sprays to be operating and cleaned regularly
- Water spray to be operating on bottom belt
- Shovels and belt structure recovery tools on storage areas at the belt bridge
- Dust scrubbers operational
- DCB and area to be kept tidy and clean (do Not store rubbish on top of DCB)
- Communication devices operational
- Belt signal line correctly retracted, stored and re-tensioned
- Lights operational
- Belt guarding system in place

- Coal centrally loading into belt
- Check for correct horizontal alignment between BSL discharge and boot-end to minimise fines 'carry-back'
- Clearance under the boot-end maintained at all times
- BSL plough cleaning floor level as per design

7.9 Electrical Area

- All 3.3KV plugs and cables to have 'Identification Tags'
- Lights along the monorail, boot-end, retrieval platform, BSL and boot-end bridge are operating
- Communication devices operating phones and DAC's
- General cleanliness and accumulations of water or wet fines to be removed from around all electrical enclosures and cable connection points

7.10 Face Standards

7.11 General Access to Face Area

- All personnel entering the face area of the LW unit must be trained in the LW face familiarisation which will include pinch-point, isolation standards and the 'No Go Zones' whilst the face is in operation or be accompanied by a person who is trained in the above competency
- Visitors to the longwall are to be accompanied at all times as per above dot point and will not be allowed on the face unless approved by Longwall Deputy
- Skyway Handrails must be removed or laid down prior to the face entering low clearance areas
- BSL skyway to be kept completely clear of obstructions, long bolt tails that can cause injury to persons crossing the skyway must clearly marked.
- The Longwall Deputy assigned to the LW face may reduce this number of men if conditions warrant a reduction in the number of men on the face so long as the face equipment can be operated safely and efficiently
- All personnel entering the LW face area inbye of the boot-end must inform either the Longwall Deputy or Maingate Operator prior to entering this area and wait for permission to enter.

7.12 General Face Standards

- Moolarben Coal Operations isolation procedures apply to all events where isolation is required on the LW face
- Face alignment to be as straight as possible – string line / target line to be applied each day or as required until V-shield target line alignment training has been completed, implemented and operational.
- Roof support leg setting and yield pressures are to be regularly monitored and anomalies recorded on the Longwall Deputies report and/or LW Tradesmen's reports
- Tailgate and Main gate to be kept aligned to face and not lagging or leading the ROF shield alignment

- Designed extraction horizon or shearer extraction horizon control parameters to be maintained at all times. No major changes are to be made to the longwall operation without prior consultation with and approval from, Shift Undermanager who will consult with the Production Manager and Longwall Engineer.
- The changes must be assessed under the obligation to control risk principles and communicated to crews under MCO Change Management procedure
- Measure creep at regular intervals at the maingate and record on 'Creep Control Monitoring Report LW', longwall creep should be kept within 150mm of centre at all times, Longwall Production Deputies are to update creep chart in Undermanager's office at the end of each shift
- Roof supports shall be cleaned regularly.
- Roof supports to be lifted over poor floor material and not allowed floor material to build up between AFC pan and pontoons,
- Area between tailgate gate shields and AFC CST drive unit to be kept clean.
- Tailgate drive area to be kept clean, broken roof areas to support ASAP with flippers or advancing shields
- Dust suppression is high priority maintaining compliance with the New South Wales Regulations
- AFC Drive carports to be kept clean of rubbish and dust
- Pumps to be maintained to keep face clear of water.
- AFC cable and hose tray covers and bash plates to be kept intact and fitted
- Bretby cable tray to be kept clean of debris, stone and coal
- Shearer set up to stop 100mm short of mechanical stops at maingate and tailgate and not driven into mechanical stops, shearer drivers must stop on 'Electrical Stop'
- Fire Extinguishers placed every 10 shields across face
- First Aid Bags placed across the face at MCO standard spacing and sign posted indicating their location
- Lifting gear and tools must be returned to correct storage location after use, no equipment to be stored around the base of the legs
- Shear pins to be stored in holders on the leg cylinders

7.13 Floor Horizon effect on Tip to Face clearance

- Incorrect extraction of the floor can change the angle of the AFC pans which will change the angle of the Shearer when cutting the next pass of the face.
- This has a detrimental effect when a canche is left on the floor and when the AFC pans push they rise creating an increased FAT angle which then reduces the Tip to Face clearance between the leading cutter drum and the Canopy tip
- This is demonstrated in the diagrams below
- The maximum FAT (Face Advance angle) accepted will be + or - 3 degrees
- The Relay bar has holes at 100mm intervals which provides the ability to increase or decrease the Tip to Face distance and allow shields to be stepped back to allow for floor horizons that have been cut incorrectly therefore not allowing the shearer to pass without striking the Canopy

- The normal operating Hole for the Relay bar is the second hole (the operator can see 1 Hole between the shear pin and the clevis

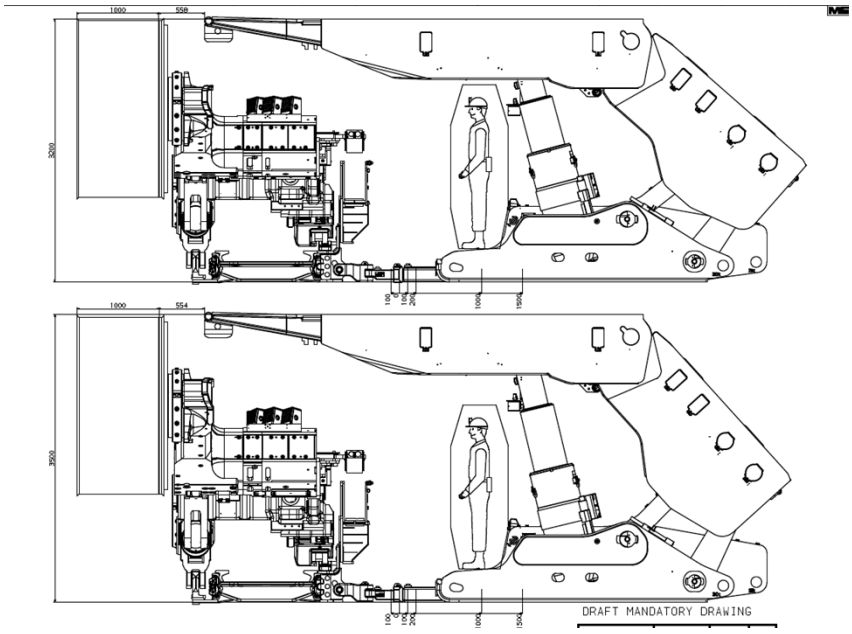

Normal Level Cutting Horizon @ 3.2m and 3.5m mining height

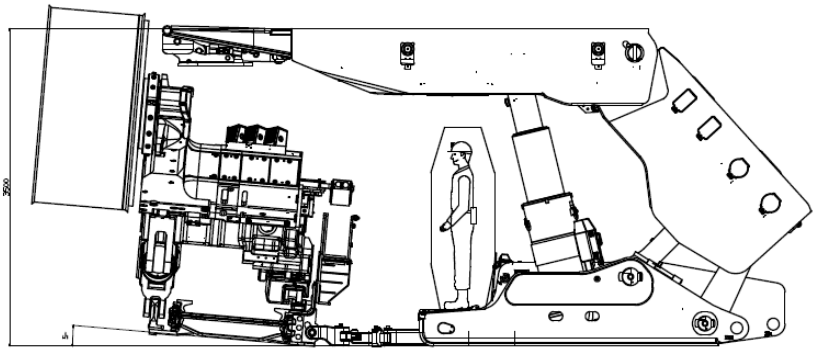

5 degree change in pan angle – drum clears canopy

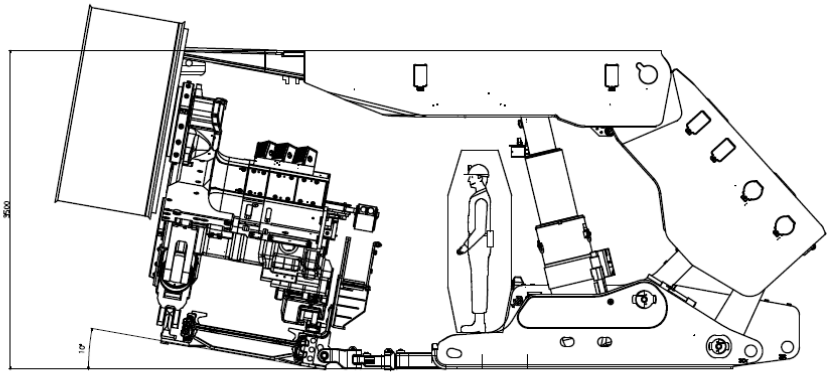

10 degree change in pan angle – drum strikes canopy

7.14 Tailgate Roadway Standards

- No person is to enter the LW face district via the tailgate without permission of the Longwall Panel Supervisor, tailgate roadway is to be regularly inspected (each shift) within 100m of the LW face for metal, debris, etc.
- Tailgate face end extraction horizon to be determined relative to the penny band.
- Phone to be positioned at TG doors for communication with the Longwall prior to entering TG
- Hazard/caution tape to be erected no less than 20m from Longwall face position
- Stone dust to intermixed with the TG atmosphere at a rate of 150kg/hr

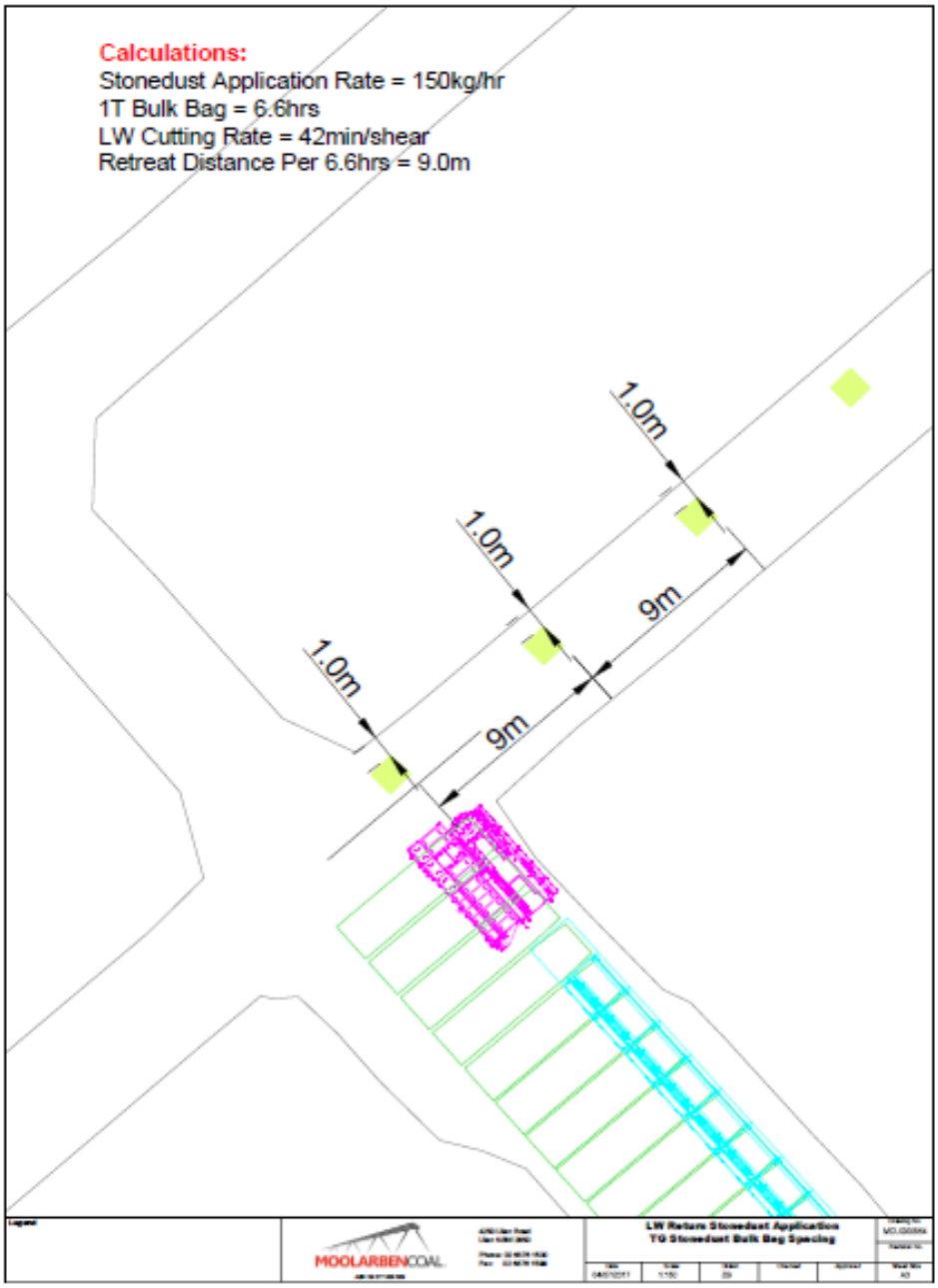

7.15 Longwall No-Go Zone – Shearer cuts into TG Roadway

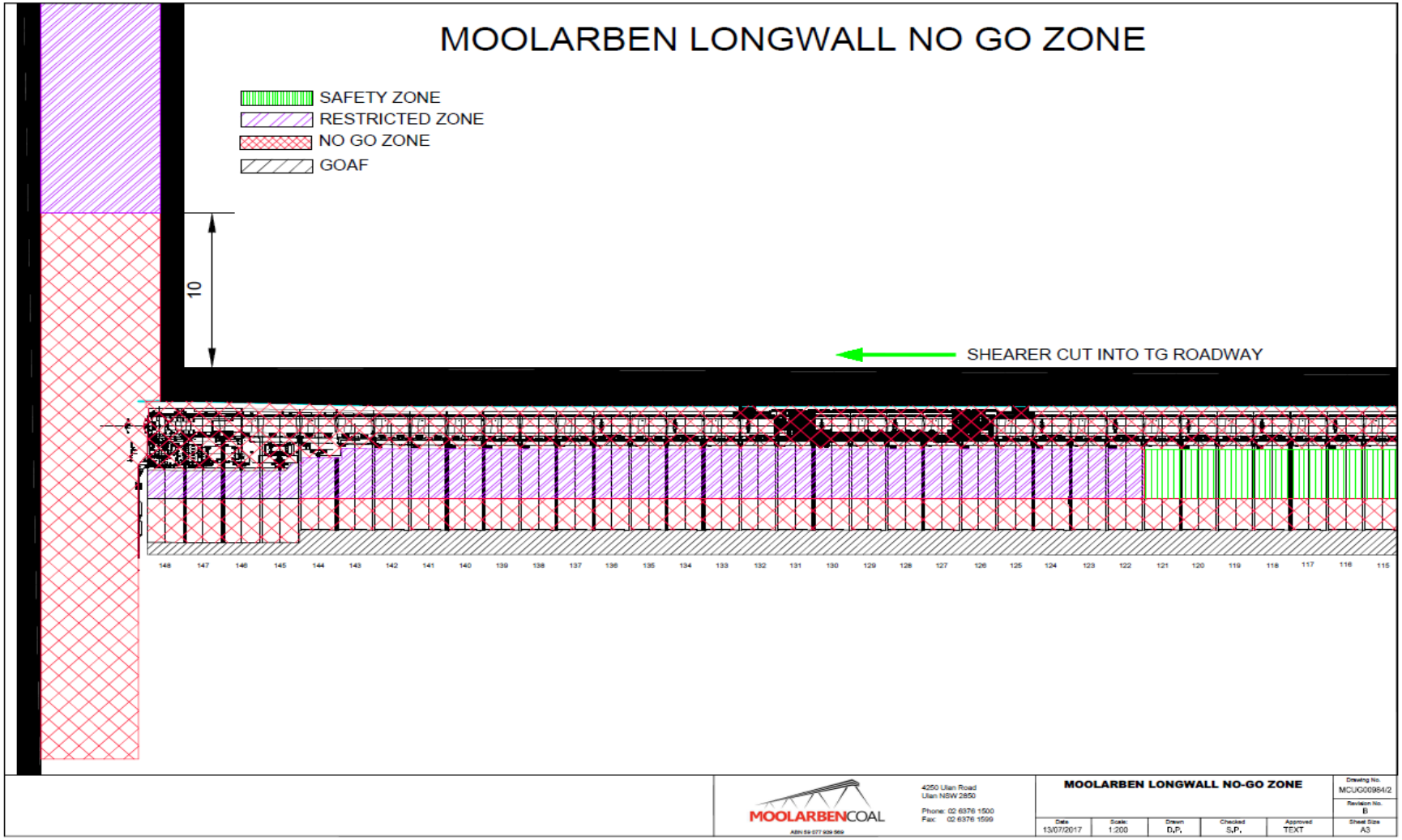

7.16 Longwall No-Go Zone – Four TG shields advance in sequence 147, 148, 146, 145

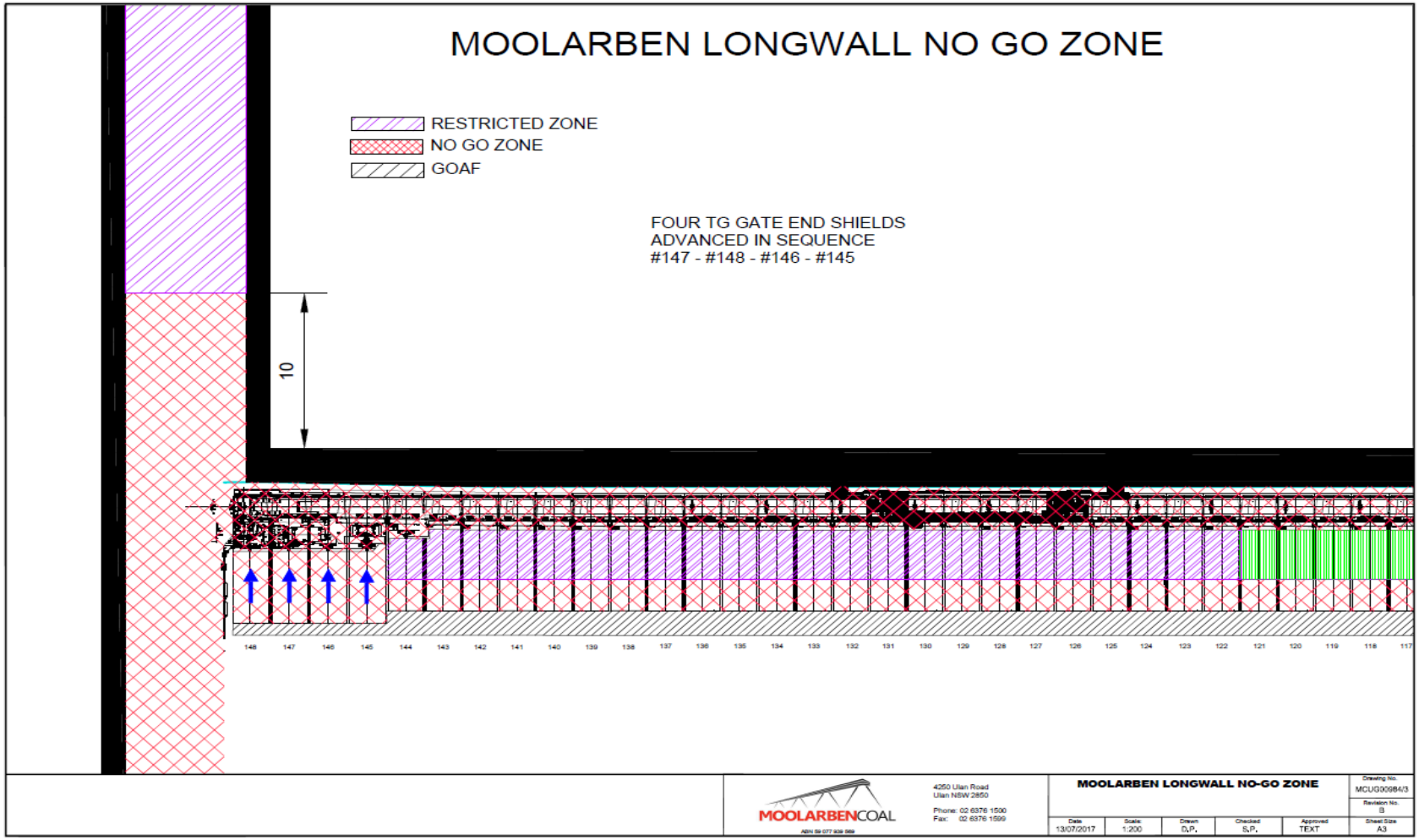

7.17 Longwall No-Go Zone – Shearer cuts out of TG to MG

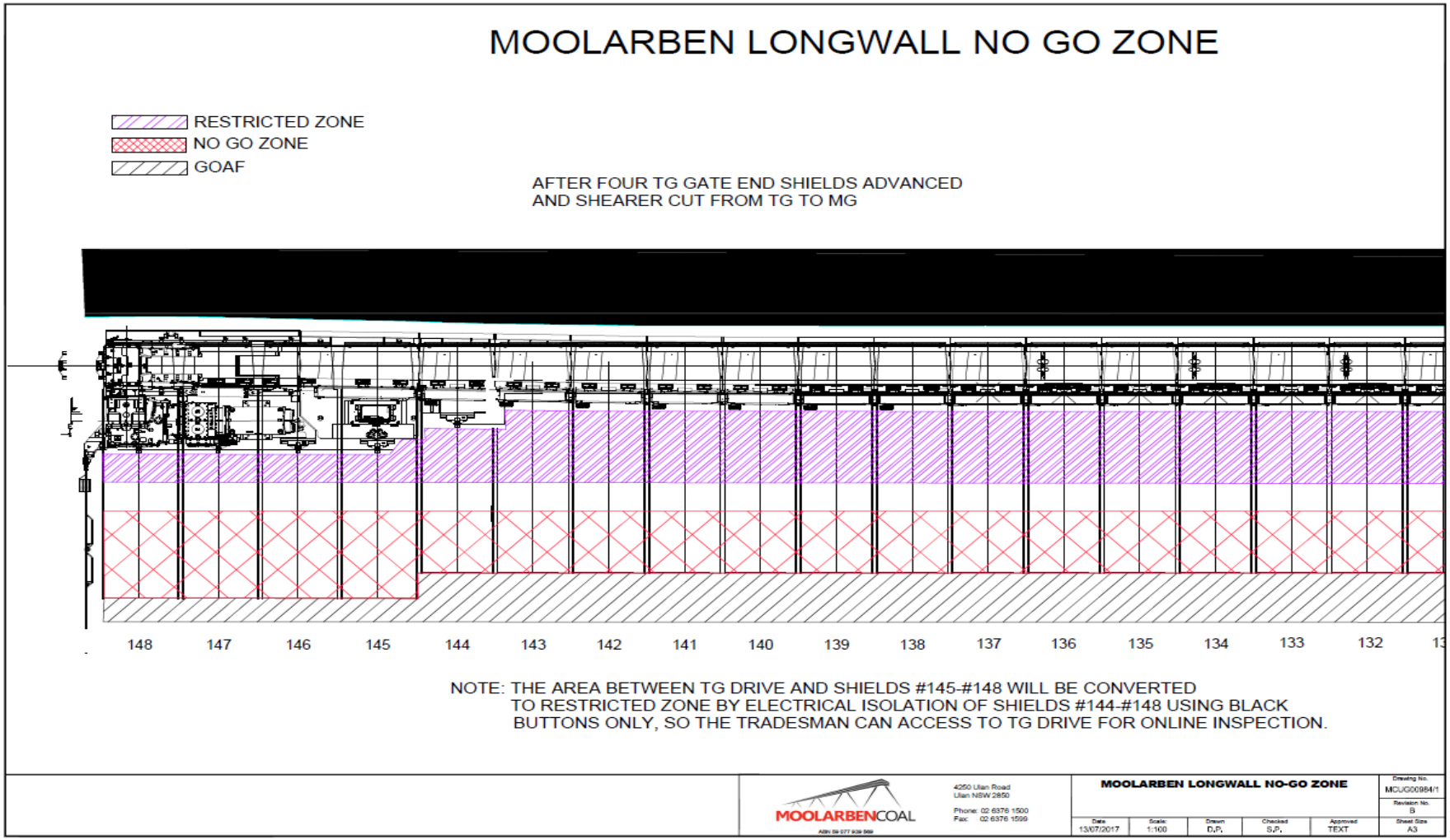

7.18 Crib Room Standards

- Cut-through to be cleaned of rubbish – floor clean and level
- Roof and ribs secure and stone dusted prior to crib room being installed
- Crib table body level and centrally located in roadway
- Notice board hung and clearly displays notices to include:
- Deputy's Production District Plan
- Authority to Mine
- Emergency Evacuation Egress Plan
- Support Rules
- Standard Operating Cycles for the LW Face Shield LAS Sequence
- Withdrawal Conditions
- Out of service and Danger tags
- First Aid equipment
- Phone set up and operational
- VAA connect to face, belt road and Surface control room
- 2 x garbage bins or bags near table and regularly emptied
- Transport to be parked in cut-through when not in use (not in a roadway)
- Secondary support installed in belt road intersection before Crib Room set up
- Longwall Deputy, Mechanical and Electrical Tradesman's' reports to be kept in the Crib Room on table, these are to be read and initialled by oncoming shift personnel
- Moolarben Coal Operations Longwall Standards and Operating Manual latest version in a folder
- Work Instructions for operational and maintenance tasks in a folder
- Hydraulic hose colour code chart.
- Phone set up and operational.
- Sign erected for crib room, phone and first aid.

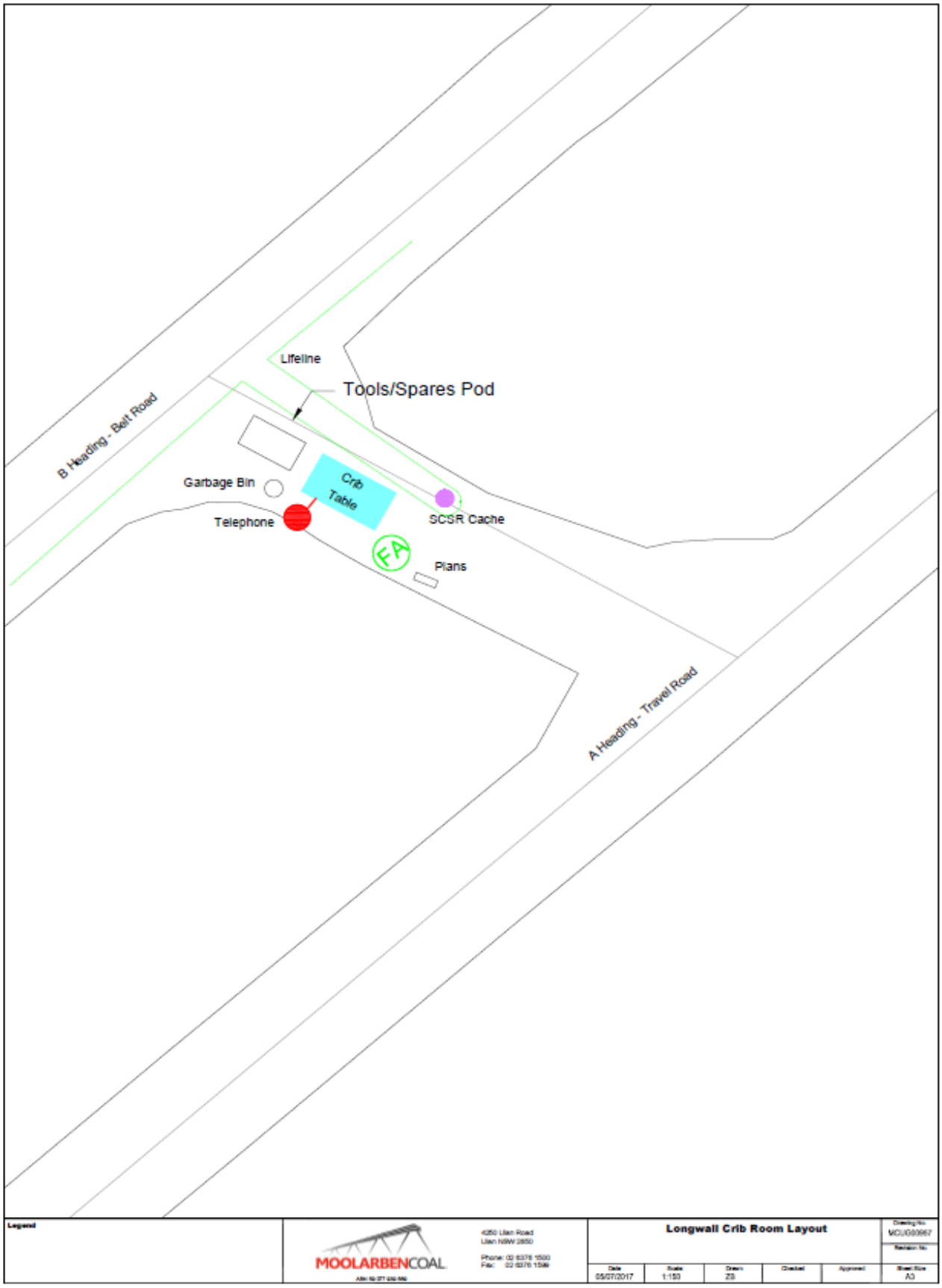
Lifeline
Tools/Spares Pod
B Heading - Belt Road
Garbage Bin
Crib Table
Telephone
SCSR Cache
FA
Plans
A Heading - Travel Road
Legend
MOOLARBENCOAL
Longwall Crib Room Layout
05/07/2017
1:150
A3

7.19 Standard Maingate Roadway

- Removal or cut off boot-end hold down bolts from floor.
- Equipment and materials returned to spar pods or C/T.
- All belt guarding to be in place
- Bootend to be aligned and cleaned.
- All lights to be operating.
- Out of service ,danger and information tags to be kept on DCB.
- Keep DCB clean and tidy.
- All 3.3 plugs and cables to have identification tag on
- All hoses and valves to have identification tag on.
- All phones and VAAs to be operational.
- Pump pods to be clean and free of oil leaks.
- Is support installed to standard.
- Ensure chainage tags are on roof every 5m.
- Creep indicator to be clean and visible
- Link n locks installed in C/T 20m prior to face arrival.
- Shovels and belt removal tools to be at bootend.
- All BSL sprays to be cleaned and operating.
- BSL scrubber operational and filters back flushed.
- Fire depot and tool boxes to be clean and accessible.
- A rattle gun hooked to compressed air with a dolly ready for use on retrieval platform.
- Clean walk way prior to monorail tramming outbye to new location
- As soon as practicable after start-up of a new longwall block, all secondary support to be completed prior to monorail tramming outbye to new location
- Walkway between monorail and belt is to be clean and clear for walking access
- Belt structure and monorails removed are to be stacked neatly in designated storage areas or run outbye on the belt to next cut-through and loaded into QDS pods and mono rail beams loaded onto Installation Malibu
- Bottom rollers are to be cleaned if any spillage occurs as per Moolarben Coal Operations Standards
- Any rib bolts tails and rib mesh that may cause monorail mounted Pump station or cassettes to be damaged are to be removed
- Flexi bolt tails removed so they do not foul the monorail hoses and cable and BSL
- Monorail chains to be positioned up out of way to prevent fouling of mules
- Water holes pumped out
- Roadway stone dusted to comply with the NSW Work Health & Safety Act (Mines & Petroleum) 2013 and the NSW Work Health & Safety Regulation (Mines & Petroleum) 2014

7.20 (Diagram of Monorail Installation Layout – 5.4m wide driveage {full page for drawing})

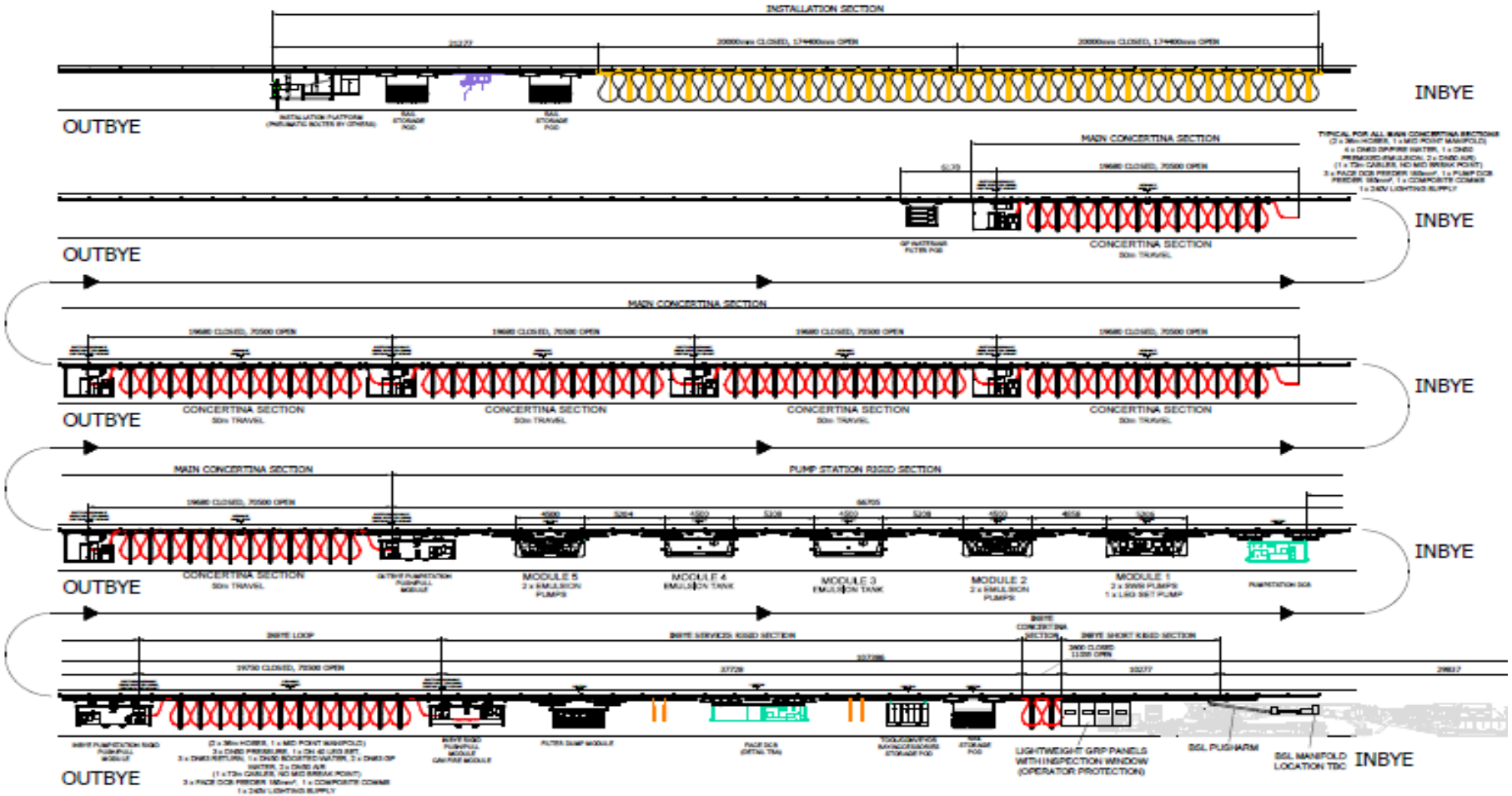

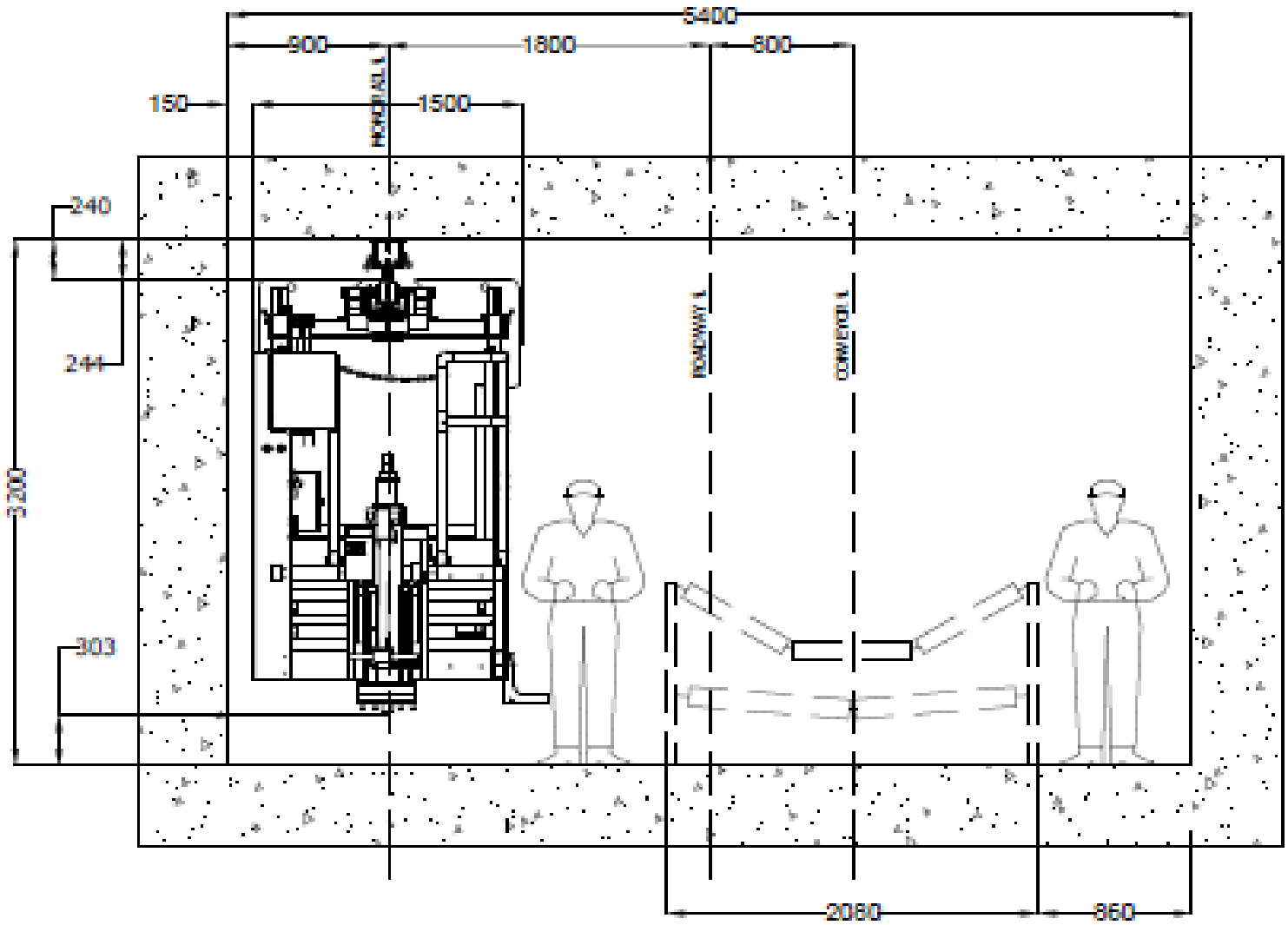
5400
900
1800
800
150
1500
240
244
3200
303
2080
860

7.21 Transformer Cut-through Standards

- Secondary support installed where required to secondary support standard
- Cut-through shall be cleaned and levelled and stone dusted before transformer set up
- 3.4m minimum clearance needed for entrance to cut-through from RTVTR
- High tension cable hung to roof clear of damage
- Transformer set up as shown in Installation Plan with transformer to be levelled and Link-n-Lock timber cribs erected under the high ends of the TX if needed
- Barricade erected at both ends of the cut-through
- Sign stating 'Only Authorised Access' is to be hung
- Deputy District Board hung on barricade
- Deputy District signs to be hung in RTVTR and the belt road
- Hoses to be maintained as stated in Longwall hose management system so no contact is made with any other hoses cable or other objects
- Cables to be hung from roof or ribs so no contact is made with any other cable, hoses or other objects
- Cut-through to be kept clean of rubbish and cleaned regularly, Garbage bags to be hung in c/t
- 'Personal Danger Tags', 'Out of Service' and 'Information Tags' are to be kept on the transformer
- All hoses on RTVTR Hdg manifold to have identification tags
- Firefighting equipment to the MCO standards outbye in RTVTR

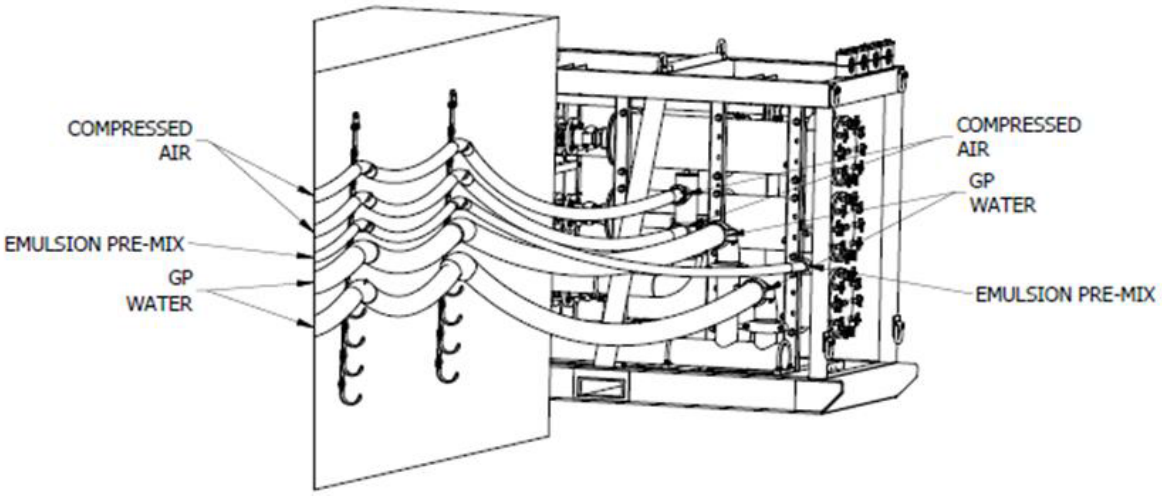

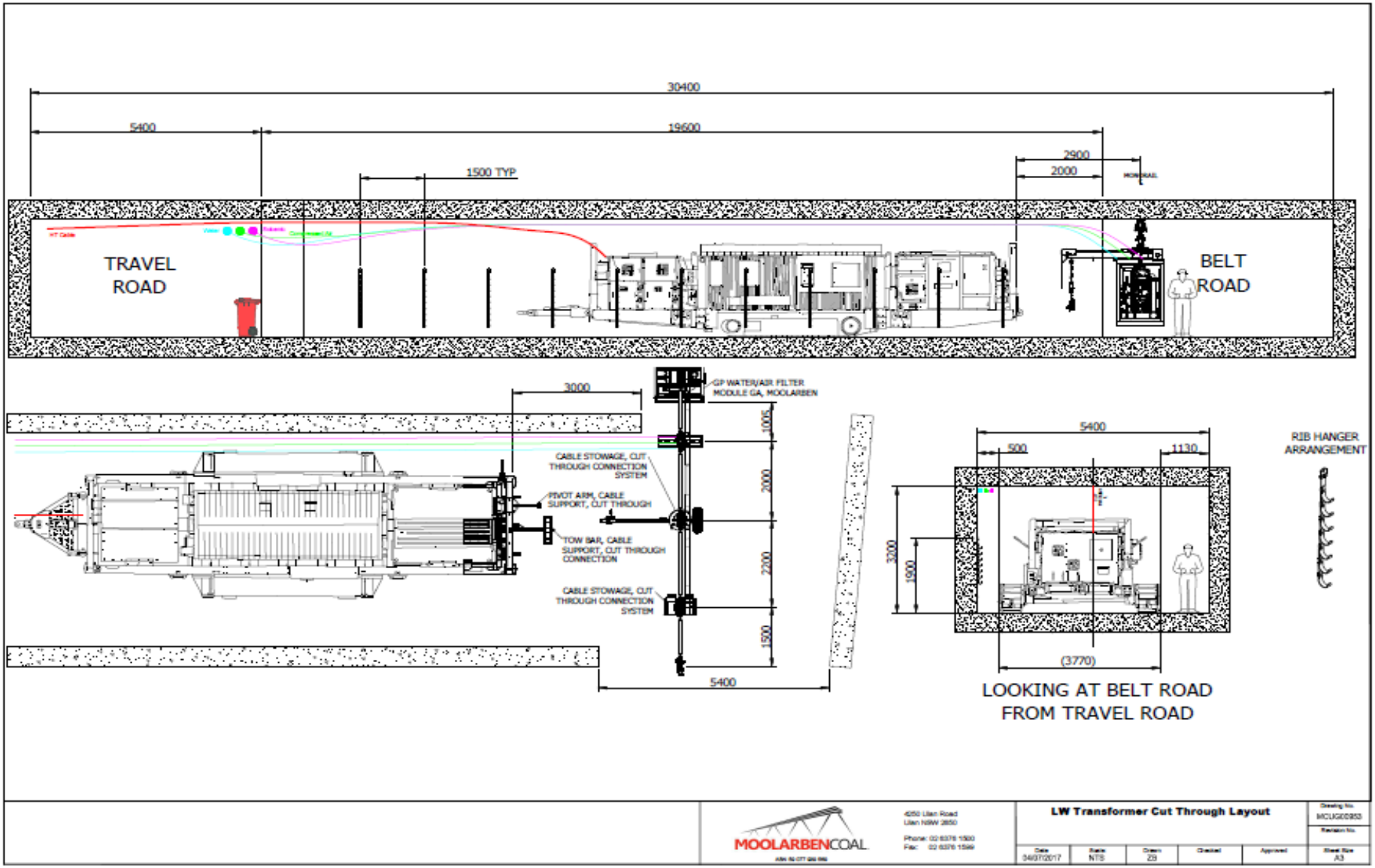

APPROVED DOCUMENT IS UNCONTROLLED WHEN PRINTED

7.22 Travel Road and Cut-through Standards

- Water holes pumped out and pumps maintained
- RTVTR to have good roadway surface maintained and to be constructed to MCO standard.
- Drain kept clean
- Pump suctions clean
- Roadway surface level and pot hole free
- Roadway surface free of water but not dusty
- Minimum clearance height 3.2m
- All rubbish is to be removed from roadway
- All hoses rolled up and hung on rib bolts or mesh
- Signs cleaned and visible
- Cut-throughs cleaned
- All secondary support installed for cut-through sealing before LW face passes cut-through
- Any additional secondary supports to be set in roadway for next tailgate to be installed at a rate that keeps pace with the extraction rate of the current face
- Additional stone dusting completed to prepare for next tailgate prior to installation of standing supports if required
- Nitrogen pipe/hoses to access goaf secured to roof
- Temporary stopping erected in cut-through prior to seal construction
- Brattice wing erected to ventilate seal – Inbye faceline
- Seal construction sites ventilated
- Last open cut-through outbye of the longwall face to contain fitters spares pod, structure pod, spare oils, hoses, picks and emergency pod set up to standard (Diagram on next page)
- Lifeline run out to self-rescuer cache and sign posted

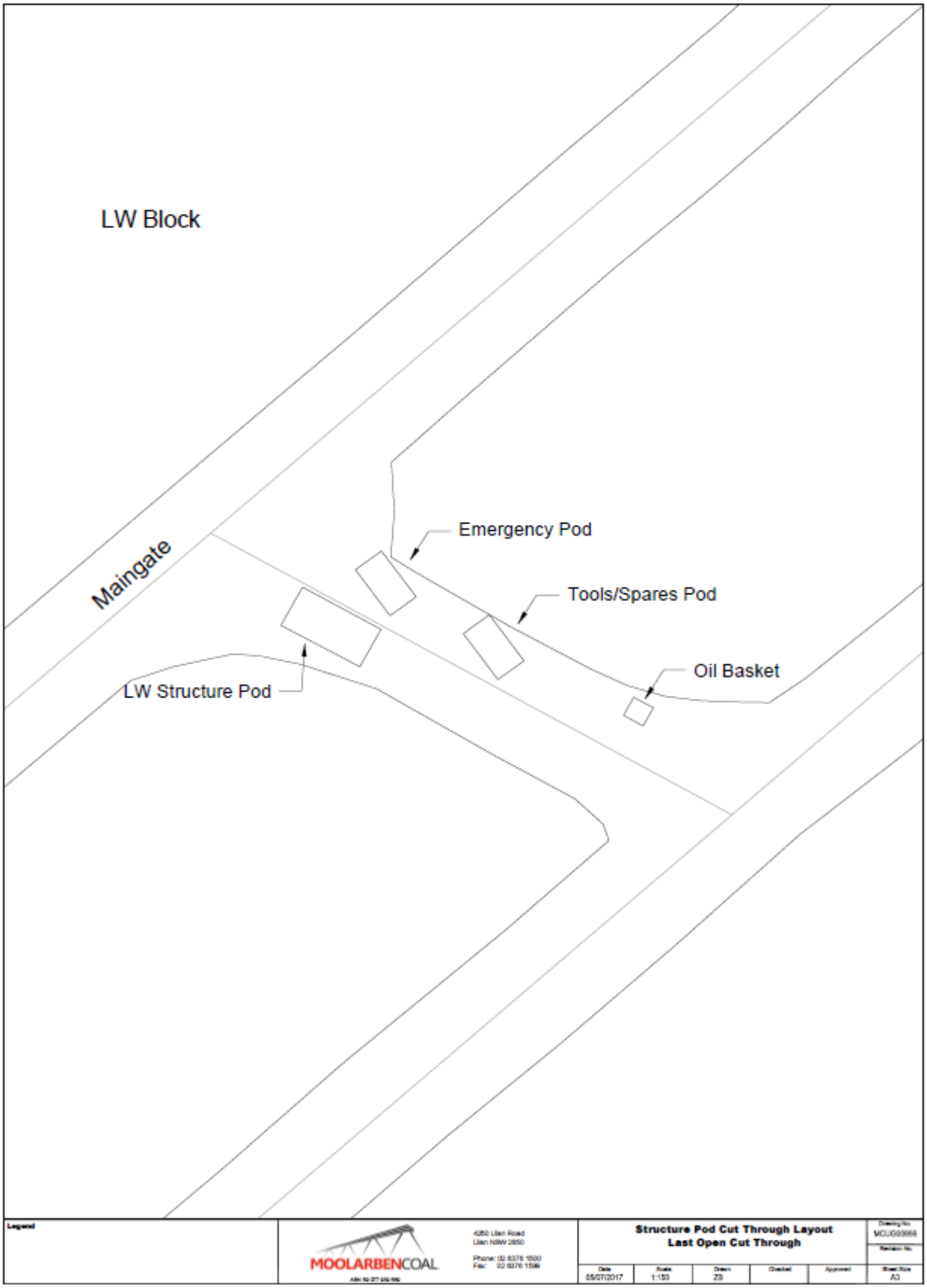
LW Block
Maingate
Emergency Pod
Tools/Spares Pod
Oil Basket
LW Structure Pod
Legend
MOOLARBENCOAL
Structure Pod Cut Through Layout
Last Open Cut Through
05/07/2017
1:150
ZB
A3

Figure ?

7.23 Longwall Belt Standards

- Cleaning standards, Minimum of 300mm clearance from fines under return rollers
- Roller replacement system operating as per MCO standard system u/s rollers and rubbish removed from roadway and cut-throughs
- Stone dusted to Standard
- Belt communication to be operating

7.24 Longwall Isolation Standards

7.24.1 Key points and strategy

Emergency stops on the longwall system are generally specific for each piece of equipment. It is important all operators are *absolutely sure* which emergency stop operates each piece of equipment, these are discussed below.

Moolarben Coal Operations Isolation Procedures apply to all events where isolation is required on the LW face.

It is also important that operators understand the difference between ***'Isolation'*** and ***'Emergency Stop'***

7.24.2 Isolation:

Will remove the source of power/energy to the unit of Plant

7.24.3 Emergency Stop:

Will only stop the unit of Plant by control circuit interruption

It is imperative ***'Full Isolation'*** is carried out when working within the confines of equipment or when exposed to potential equipment movement.

Remote Isolation can be used in the following situations that have been determined by MCO site Risk Assessment process

8. LW CUTTING CYCLES

The cutting cycles to be used at Moolarben Coal Operations on the LW face will be predominately Bi – Directional (BI -DI) which maximises the production rate for the longwall, It may become necessary to revert to Universal Direction (Uni -DI) Cutting cycle at times but this will be managed via the MCO change management process.

The BI-DI system.

Starting Position – The shearer Is at the MG

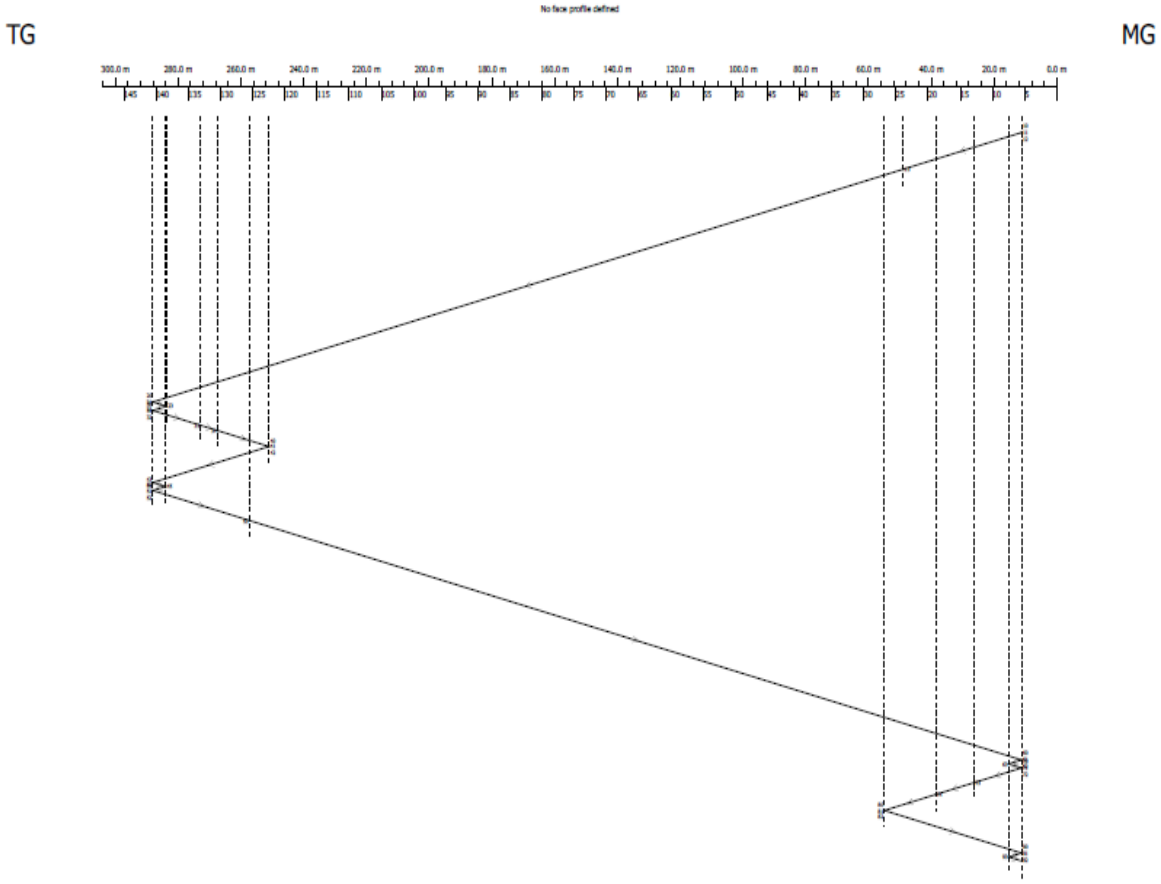
TG
MG
No face profile defined
300.0 m
280.0 m
260.0 m
240.0 m
220.0 m
200.0 m
180.0 m
160.0 m
140.0 m
120.0 m
100.0 m
80.0 m
60.0 m
40.0 m
20.0 m
0.0 m

8.1 General

Lead and trail drum anti-collision is active throughout the face. The difference between a roof supports canopy tip height and drum height is compared. If they are deemed to close and the shield is advanced below 70% rams stroke, then the shearer will be stopped and any ASQ at the collision shield will be stopped.

Shield advance collisions will not occur on the gate shields, however flipper collisions can occur on the gate shields.

8.2 MAIN TO TAIL SEQUENCE

1. The shearer leaves the Maingate. The face is straight and all Run of Face shields are back.

- Shields are already advanced between the Main gate up to and including 23 shield.
- Otherwise all Run of Face shields are OWB (One Web Back) and the MG and TG shields are advanced. (Conventional Mode)
- Lead drum Idle (2400mm)
- Tail drum cuts the floor in previous extraction, 3.3m below its roof cut from the previous shear.

2. As the shearer lead drum passes 23 shield the Leading drum raises to the roof in phases to avoid anti-collision on the lead drum.

- Lead drum cutting roof In Manual referenced from the roof clay band.
- Tail drum cutting the floor in Fixed extraction, cutting 3.3m below what the lead drum cut at that point.

3. As the centre of the shearer passes 24 shield

- A Bankpush pre-warn audible alarm will be initiated across the MG push group of shields.
- An audible alarm will also be heard on the bootend controller, indicating that the can be accepted. The BSL push can be accepted at this point.

4. Shields will begin to advance from shield 24 towards the TG.

- Shields will be triggered over the centre of the shearer (2-3 shields behind the lead drum).
- Shields will generally advance in a sequential manner but situations will arise where shields do not advance in order.
- If the shield advance begins to fall behind, then the shearer will slow down to allow the supports to catch up.
- Generally, 1 shield at a time will actively auto sequencing LAS (Lowering – Advancing – Setting). As one shield sets, the next will begin to lower). The exception is that gate shields are also allowed to advance simultaneously with the run of face shields, meaning that 2 shields on the face will be advancing simultaneously.

5. As the centre of the shearer passes 25 shield.

- The BSL push is initiated if the BSL push has been accepted at the Bootend.

- If the BSL push has not been accepted at the bootend then the MG group will not push, however, the push will begin from 6 shield towards the shearer regardless.
- If the push is not accepted within a time frame, then the push accept will cancel and a new trigger (adjacent group push of the MG will be required).
- Once the MG shields have fully pushed (100% on the DA rams) (or timed out) the MG shield advance will commence in the order 2, 1, 3, 4, 5.

6. The push will be initiated after every 5 shields of advance throughout the face, maintaining a 13-pan snake.
7. The last shield that will fully push on the Main to Snake sequence is shield 127, a snake will be formed that ends at 140.
8. As the Shearer position hits 143, the system allows all shields to be advanced up to 143 shield.

NOTE – IT WILL BE COMMON FOR SHIELD 143 to advance before 142.
The shearer will reach the extremes of 148 before turning.

9. The shearer will clean up within 2 – 3 (146 TG Drum position) shields. During this state the TG drum will automatically lower to the required floor height, the MG drum will automatically raise off the floor 200mm and the shearer will haul to MG 2 to 3 shields then stop and cut into the TG electrical stop However, the shearer can haul out as far as 141 on a clean-up if necessary (hauling any further than that triggers the Tail to Snake sequence and reversing the shearer will abort SRB).

8.3 TG TO TG BUTTOCK SEQUENCE

1. The shearer hauls towards the buttock

- Lead drum in Idle
- TG Drum in previous extraction cuts the floor for the length of the shearer then goes to idle.

2. The shearer lead drum will raise to the roof as the drum heads out of the snake clear of the shields
3. As the shearer passes 126 a bank push pre-warn will occur.
4. When the shearer hits 125 the TG shields will push to form a straight face.
5. The shearer will begin to haul to the TG.

- Lead drum on clay band in manual cutting roof.
- TG Drum in idle

6. Once the TG shields have fully pushed (100% on the DA rams) (or timed out) the TG shield advance will commence in the order 147, 148, 146, 145, 144.

8.4 TG BUTTOCK TO TG SEQUENCE

1. The shields will begin to advance from 127 toward the Tailgate as the shearer passes 127.

2. As the Shearer position hits 143, the system allows all shields to be advanced up to 143 shield.

   NOTE – IT WILL BE COMMON FOR SHIELD 143 to advance before 142.

   The shearer will reach the extremes of 148 before turning.

3. The shearer will clean up within 2 – 3 shields. However, the shearer can haul out as far as 141 on a clean-up if necessary (hauling any further than that triggers the Tail to Main sequence and reversing the shearer will abort SRB).

8.5 TAIL TO MAIN SEQUENCE

1. The shearer leaves the Tailgate. The face is straight and all Run of Face shields are one web back. (OMB)

- Shields are already advanced between the Tail gate up to and including 127 shield.
- Otherwise all Run of Face shields are OWB and the MG and TG shields are advanced.
- Lead drum Idle (2400mm)

2. Tail drum in previous extraction cuts the floor 3.3 below its roof cut from buttocks to TG sequence.

3. As the shearer lead drum passes 127 shield the drum raises to the roof in phases to avoid anti-collision on the lead drum.

- Lead drum cutting roof in manual. on Clay band.
- Tail drum cutting the floor in fixed extraction, cutting 3.3m below what the lead drum cut at that point.

4. As the centre of the shearer passes 126 shield a Bankpush pre-warn audible alarm will be initiated across the TG push group of shields.

5. Shields will begin to advance from shield 126 towards the MG.

- Shields will be triggered over the centre of the shearer (2-3 shields behind the lead drum).
- Shields will generally advance in a sequential manner but situations will arise where shields do not advance in order.
- If the shield advance begins to fall behind, then the shearer will slow down to allow the supports to catch up.
- Generally, 1 shield at a time will actively auto sequencing LAS (Lowering – Advancing – Setting). As one shield sets, the next will begin to lower). The exception is that gate shields are also allowed to advance simultaneously with the run of face shields, meaning that 2 shields on the face will be advancing simultaneously.

6. As the centre of the shearer passes 125 shield.

- The TG push is initiated over the TG push group.

7. Once the TG shields have fully pushed (100% on the DA rams) (or timed out) the TG advance will commence in the order 147, 148, 146, 145, 144.
8. The push will be initiated after every 5 shields of advance throughout the face, maintaining a 13-pan snake.
9. The last shield that will fully push on the Tail to Main sequence is shield 23, a snake will be formed that ends at 11 shield.
10. As the Shearer position hits 7, the system allows all shields to be advanced up to 6 shield.

NOTE – IT WILL BE COMMON FOR SHIELD 6 to advance before shield 7.
The shearer will reach the extremes of 5 / 6 before turning.

11. The shearer will clean up within 2 – 3 shields. However, the shearer can haul out as far as 10 on a clean-up if necessary (hauling any further than that triggers the Main to Snake sequence and reversing the shearer will abort SRB).

8.6 MG TO MG BUTTOCK SEQUENCE

1. The shearer hauls towards the buttock.

- Lead drum in Idle
- TG Drum in in previous extraction cuts the floor for the length of the shearer then goes to idle

2. The shearer lead drum will raise to the roof as the drum heads out of the snake.

3. As the centre of the shearer passes 24 shield

- A Bankpush pre-warn audible alarm will be initiated across the MG push group of shields.
- An audible alarm will also be heard on the bootend controller, indicating that the can be accepted. The push can be accepted at this point.

4. As the centre of the shearer hits 25 shield.

- The BSL push is initiated if the BSL push has been accepted at the Bootend.
- If the BSL push has not been accepted at the bootend then the MG group will not push, however, the push will begin from 6 shield towards the shearer regardless.
- If the push is not accepted within a time frame, then the push accept will cancel and a new trigger (adjacent group push of the MG will be required).
- Once the MG shields have fully pushed (100% on the DA rams) (or timed out) the MG shield advance will commence in the order 2, 1, 3, 4, 5.

8.7 MG BUTTOCK TO MG SEQUENCE

1. The shields will begin to advance from 23 toward the Maingate as the shearer passes 23.
2. Lead drum cutting roof in manual to the clay band.
3. Tailgate drum in idle
4. As the Shearer position hits 7, the system allows all shields to be advanced up to 6 shield.

NOTE – IT WILL BE COMMON FOR SHIELD 6 to advance before shield 7.
The shearer will reach the extremes of 5 / 6 before turning.

5. The shearer will clean up within 2 – 3 shields. However, the shearer can haul out as far as 10 on a clean-up if necessary (hauling any further than that triggers the Main to Tail sequence and reversing the shearer will abort SRB).
6. Repeat Main to Tail Sequence

8.8 Shield Advance Methodology

The Shield Operation mode is as listed:

Conventional Mode

4 x Special Gate end Shields Maingate No 1,2,3,4

2 x Run of face In Transition position Shield No 5 and 145

4 x Special Gate end Shields Tailgate No 146, 147,148 ,149

1 Web Back Mode

138 x Run of Face shields

Shields are advanced two (2) shields behind the leading cutting drum

8.9 Front Armoured Face Conveyor (AFC) Methodology

The AFC pans move once during each cut cycle when the shearer is cutting from the maingate to tailgate and tailgate to maingate

8.10 BSL Current Control Logic

Coal flow from the face to the coal clearance system is controlled via the BSL motor current to determine the load and has three (3) set points to control the equipment loading onto the BSL.

Set Point 1 When the BSL motor current goes the Set Point 1 for more than 10 (10) seconds then it triggers Alarm 1. The program then slows the Shearer and will not allow shearer speed to increase until the BSL current falls below Set Point 1 for more than Five (5) seconds.

Set Point 2 When the BSL motor current goes above the Set Point 2 for more than 10 (10) seconds then it triggers Alarm 2. The program then stops the shearer haulage

When the BSL motor current goes below Set Point 2 for more than 10(10) seconds then the Alarm 2 is reset

Set Point 3 When the BSL Motor current goes above Set Point 3 for more than 10 (10) seconds then it triggers Alarm 3. The program then stops the AFC and will not allow it to restart until the BSL current falls below Set Point 3 for more than five (5) seconds.

These times are sequential therefore the BSL Current control cannot operate at set point 3 all the time.

8.11 Extraction Horizon

Mining horizon in UG1 is the DWS and DTP plies as shown in the figure below:

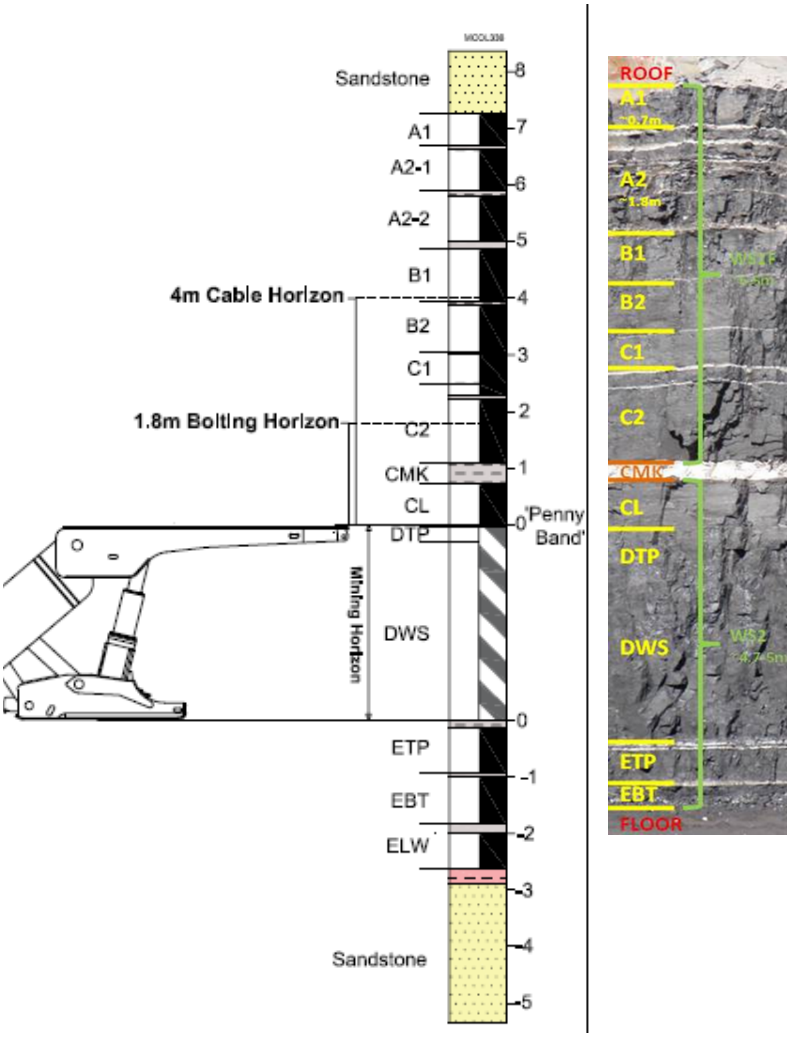

8.12 Creep Control

NB: before creep control can be effectively managed the face must be *straight* and the *horizon* must be as designed, once these two (2) critical areas are achieved the creep control is relatively easy to manage.

A Creep TARP has been developed for the creep management of the LW face. The creep management of the LW face is one of the most important aspects of LW face management due to the following reasons:

The reaction of the f AFC to respond to fly cuts to control creep is always delayed by five (4) to (5) shears before any effect is seen.

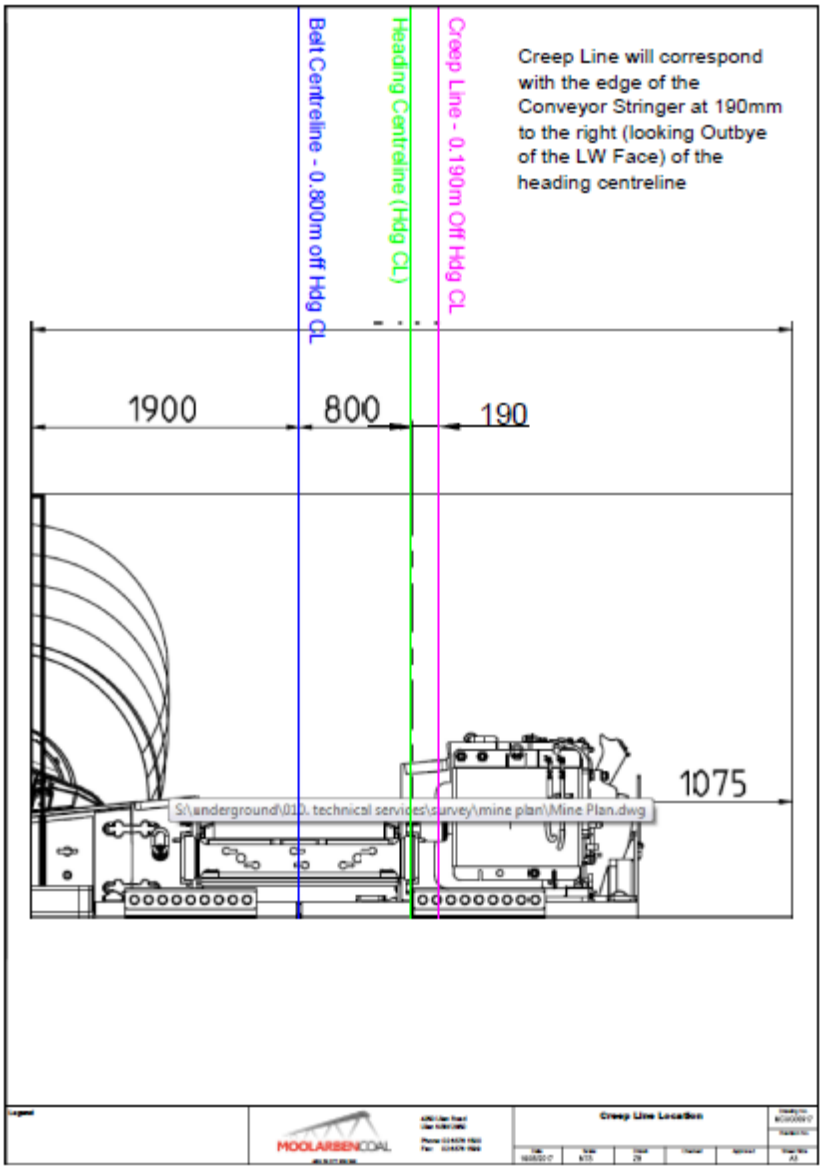

To manage the system of creep control, discipline from all crews is required to maintain the standards.

These standards are simple but very effective as corrections are made at the earliest stage to keep the creep with the acceptable limits.

8.13 The Creep Standards

1. Creep paint line is painted on the roof 100m outbye of the boot-end, thereby providing a creep reference line from the bootend to the face all the time.
2. The creep indicator is on the maingate cable tray cover

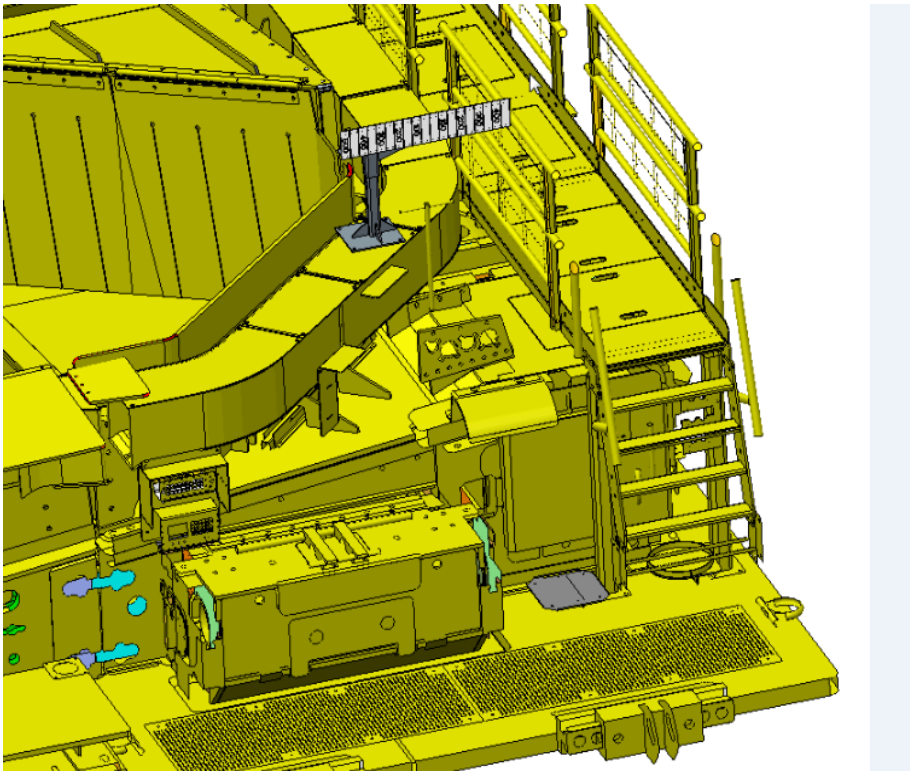

3. Creep measurement is taken after each BSL advance.
4. Creep chart is to be updated by each Longwall Deputy at end of each shift in the Undermanager's office.
5. At the SOS and EOS, Longwall Deputy records the creep and number of fly cuts taken on the production report each shift.
6. Face must be straight.
7. AFC pan line to be on the designed horizons (humps and hollows along the face cause the shields to point in directions detrimental to the AFC alignment).
8. Maintain designed lead.
9. Side seal retraction to be used when advancing shields to the string to allow the shield to turn.
10. The cutting cycle, shield advance cycle and push cycle are not to change when controlling creep.
11. Creep TARP must be adhered too.

8.14 Target line

The target line is a very important tool to maintain alignment standards on the LW face.

1. Target line is used to maintain alignment standards on the LW face.
2. The Target line must be used a minimum of once each shift.
3. The Target line can be used for fly cuts and straightening cuts to maintain face alignment of shields.
4. The Target line is instigated from the CME by the Deputy, or a trained operator under instruction from the deputy.
5. The target line can only be implemented after the CME data updates.
6. The data updates on completion of the Tail to Main cut.

8.15 String Line

1. A string line can be used as a substitute if;
    - The target line is not working
    - Fly cut of maingate
    - Fly cut of tailgate

8.16 Signs for Trigger Points along the Face

The trigger points along the face will be indicated with signs that indicate the change occurring at this point, these include:

- Shearer speed changes
- Shearer stopping positions
- Shearer change direction positions
- Shield advance initiation
- TG AFC push initiation
- BSL push initiation

9. CAVITY MANAGEMENT

Cavities on the longwall face are the single most critical item regarding production and their prevention is a priority for all crews. The occurrence of cavities causes delays, requires special procedures and exposes crews to increased hazards.

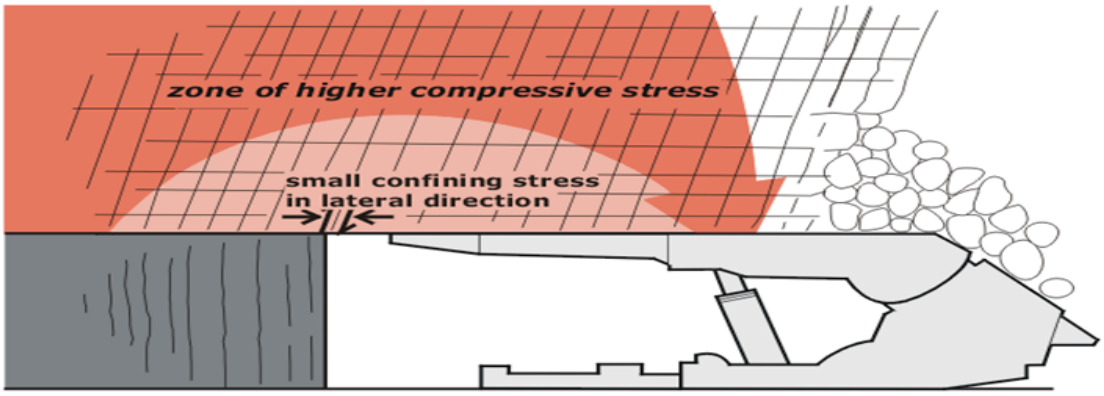

a) Longwall support in "closed" position.

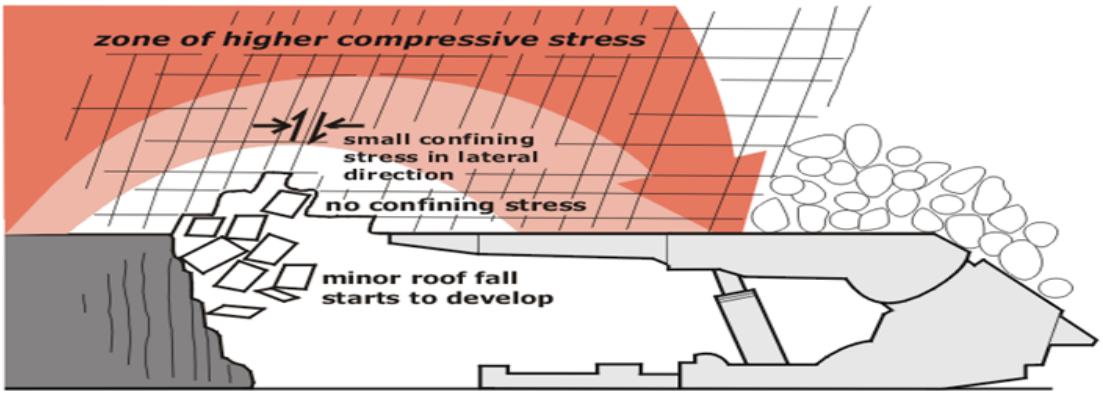

b) Longwall support further from the face.

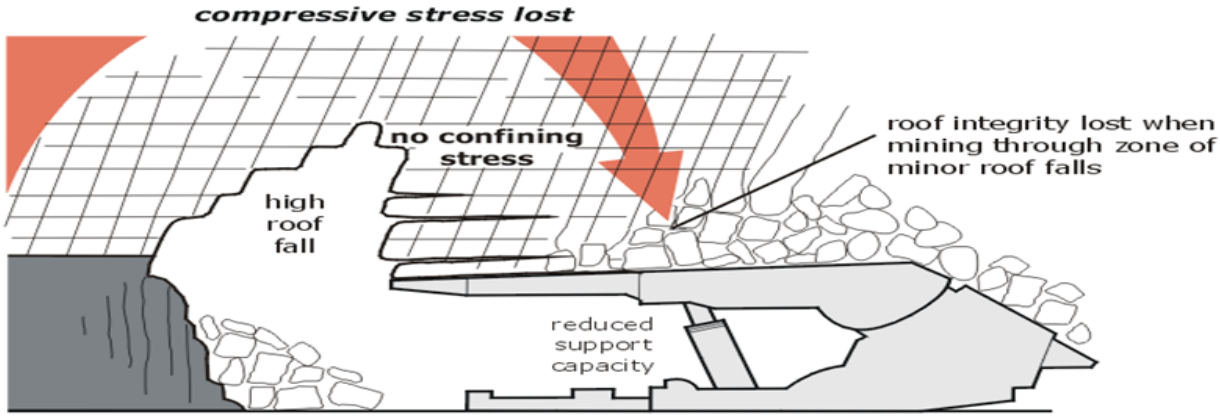

c) Longwall support set against severely broken roof.

Cavities are typically formed due to the following reasons:

- A geological structure or fault is encountered along the face
- The face alignment is allowed to create bends in the face
- The break off line at the rear of the canopy can move towards the face
- The floor horizon is poor with pans grading down increasing the tip to face
- The support density of the shields is not maintained across the face
- The tip to face distance can increase without supporting this area therefore lowering the support density of the shield
- Creep control allows the gate ends to be in positions that are outside the design parameters
- To assist in the process of managing cavities the responsibilities of each employee are detailed in the longwall TARPS
- The TARP document details the actions required by all persons who work in the longwall at each TARP level (the TARP level is determined by the physical face conditions and measurable deviations)

Actions when cavities form:

- Double chock area with shield
- Lower the extraction horizon each side of the cavity to increase the top coal thickness and strength
- Set supports with full set pressure where possible
- Maintain Level canopies thru the cavity area
- Ensure flippers are deployed on all shields with face sprags in the cavity area
- Follow the TARP conditions

Prevent the roof falling in and scouring out the face by advancing the canopies into the coal face and choking off the roof material with the canopies and face sprags where available

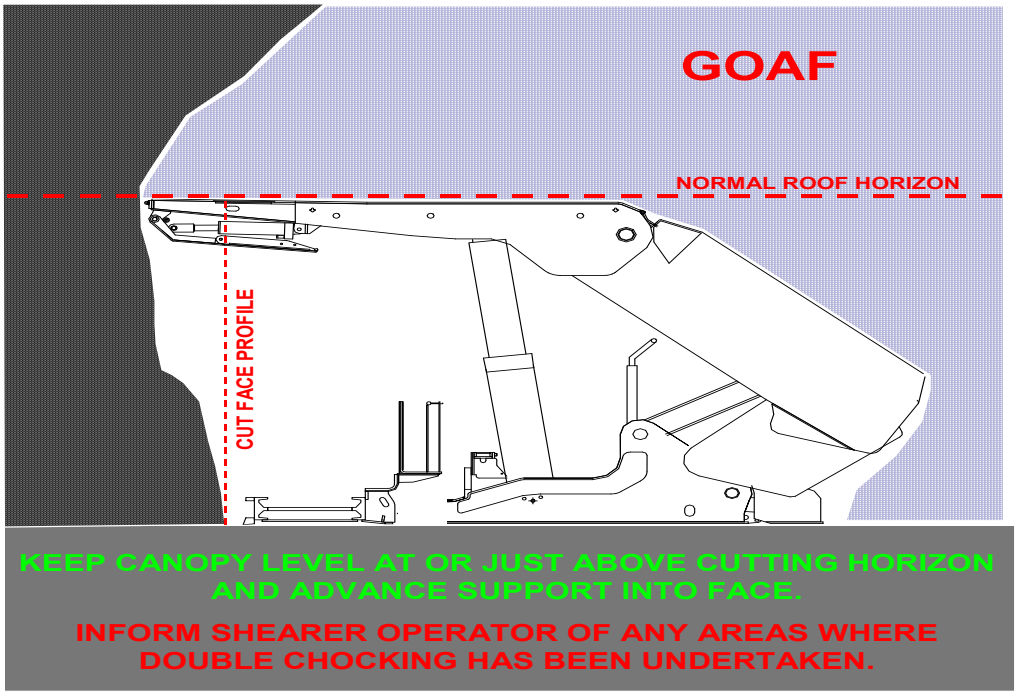

- Stop the AFC immediately if the cavity roof material continues onto the AFC and choke the flow of roof material with the face sprags until the material has stopped flowing, and then run the AFC clear
- Lower the extraction height from 3.4 m > 3.0m in 100mm increments each side of the cavity to thicken the top coal, do not chase the cavity with the canopy tips
- Face sprags where they can be used are to be deployed and left out against roof or face; the flipper bars can be isolated in the extended position when in these roof conditions, an information tag must be placed on the face sprag isolation valve that are isolated and recorded on the Longwall Deputies report
- Do not cut down into the floor under canopies unless necessary to get the shearer through area with restricted clearances
- Ensure a full advance and full push is achieved, the PMCR push pressure parameter can be reduced during this processes after consultation between the Longwall Deputy and the Shift Undermanager
- In very poor conditions cut out for only one (1) shield at a time and support immediately
- Do not use automation of shields in cavity area, individual adjacent control only
- The maintenance shift is to be manned to allow continuous production if required, this decision to be made by the Production manager and the Longwall Engineer
- When cavities are identified at a red TARP level, and immediate face control is not working, a recovery plan will be developed by the Production Manager or Longwall Engineer in conjunction with the Geotechnical Engineer.
- The recovery plan may identify the use of cavity fill or strata consolidation techniques which will be authorised by the Mine Operations Manager, a set of guidelines for the use of these products will be issued to enable the efficient implementation of this process. All longwall personnel shall be familiarised with ROCSIL and PUR, to ensure adherence to relevant work procedures and to minimise the risk to persons exposed to these products
- Turn off guaranteed -Pressure Set (individual shields on the PMCR) only when the legs get to the cavity (not earlier) and only in the cavity area, never globally

  NB: *Automatic Positive Set Function* is a Global Parameter. This can only be disabled via the High-Level Password after the Moolarben Coal Operations Change Management Process has approved this change.

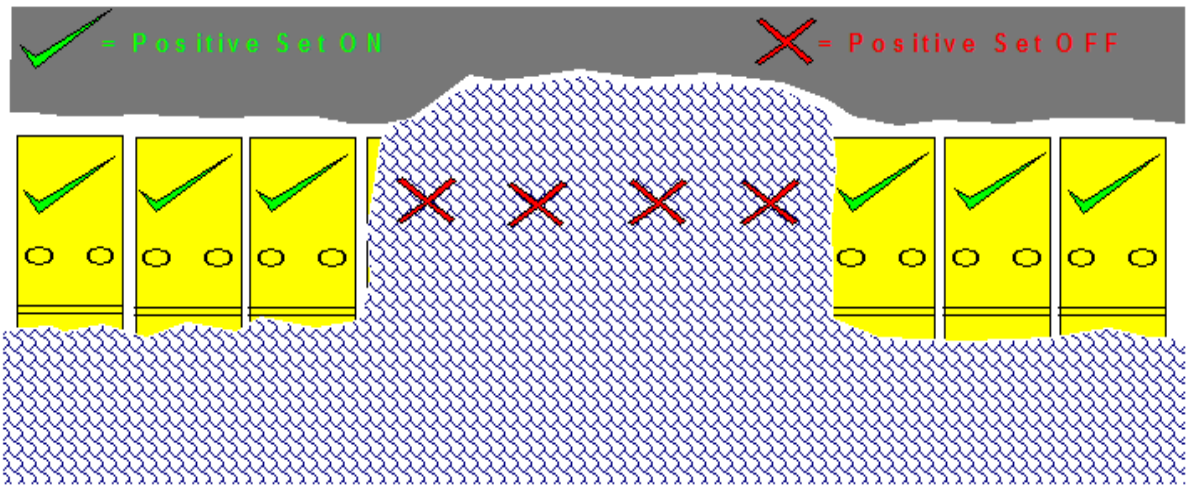

Maintain the maximum pressure possible in the legs without breaking the roof, especially at cavity edge (using adjacent control reinstating High-Pressure Set at the edges of the cavity after the legs are a minimum of 1m past the edge of the lip but maintaining tip pressure).

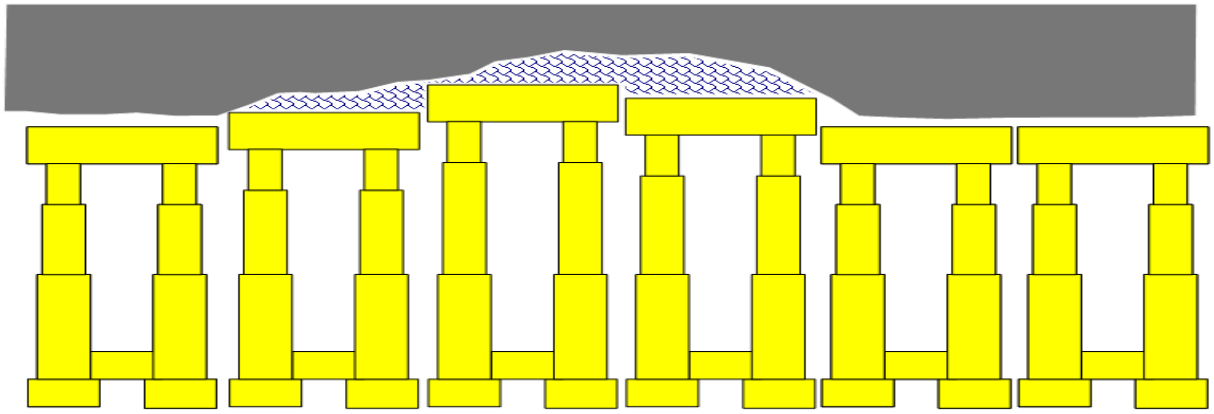

Keep canopies level both perpendicular and parallel to the face through cavity area to prevent shields becoming lipped, damaging side seals, and preventing rill running in between the canopies.

Maintain a height of 3.2m with level canopies in the cavity area and do not chase the roof cavity.

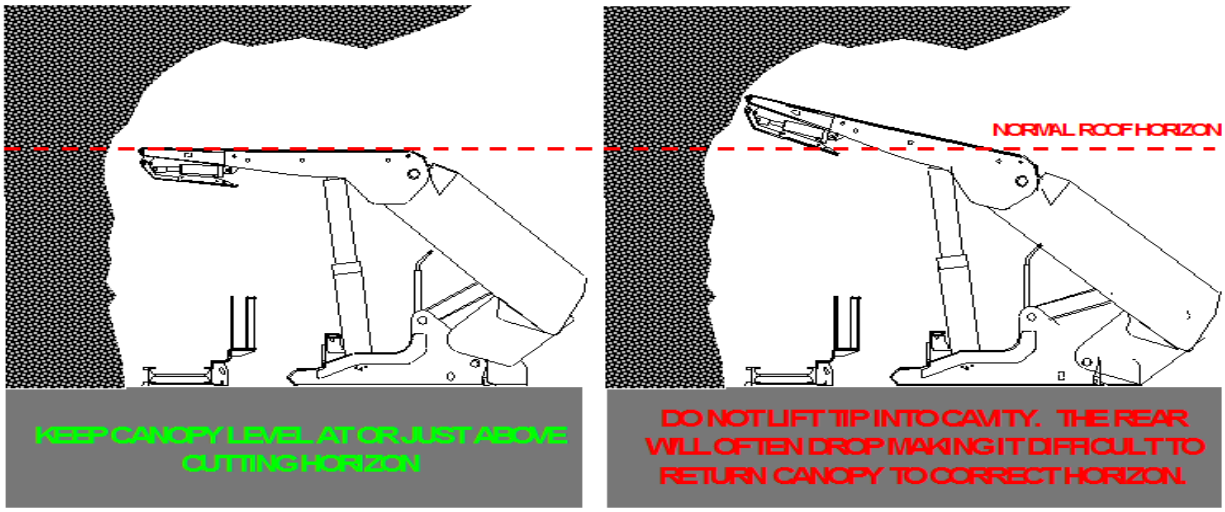

6.11 Shield Pivoting / Punching into the Roof

- Shields can pivot for several reasons – the goaf may break forward of legs, weak roof allowing shield to 'punch' into roof, debris over canopy, etc.
- It is important that operators recognise the differences and only turn guaranteed Pressure Set off when there is nothing to set the support against. In addition, they should keep the canopies level at the 3.4m seam extraction height on the cavity area

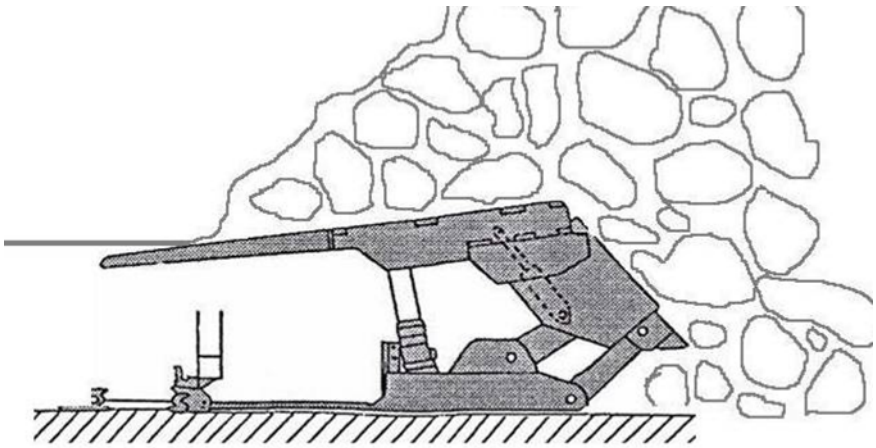

6.12 Managing Leg Set Pressure

- Leg set Pressure must be operating on all shields when the face is operating. If Leg Set Pressure is not operational throughout the face, an assessment of the strata TARP level must be made before continuing (see Longwall Face Operation TARPs and SCHMP)

- Leg set Pressure is a high-pressure system that continuously puts additional pressure (350 bar pressure into the leg cylinders during the setting process to reduce convergence by maintaining the shield support density. This is only activated when a leg set pressure of greater than 200 bar has been achieved (this is a selectable parameter)
- One of the most important roof control methods for longwall mining is reducing convergence by maintaining the designed support density, in a phrase having a 'high roof support density'
- A high roof support density will give a good break-off line and manage bed separation over the supports which will reduce the stress or tension fractures in the tip to face area (see below)

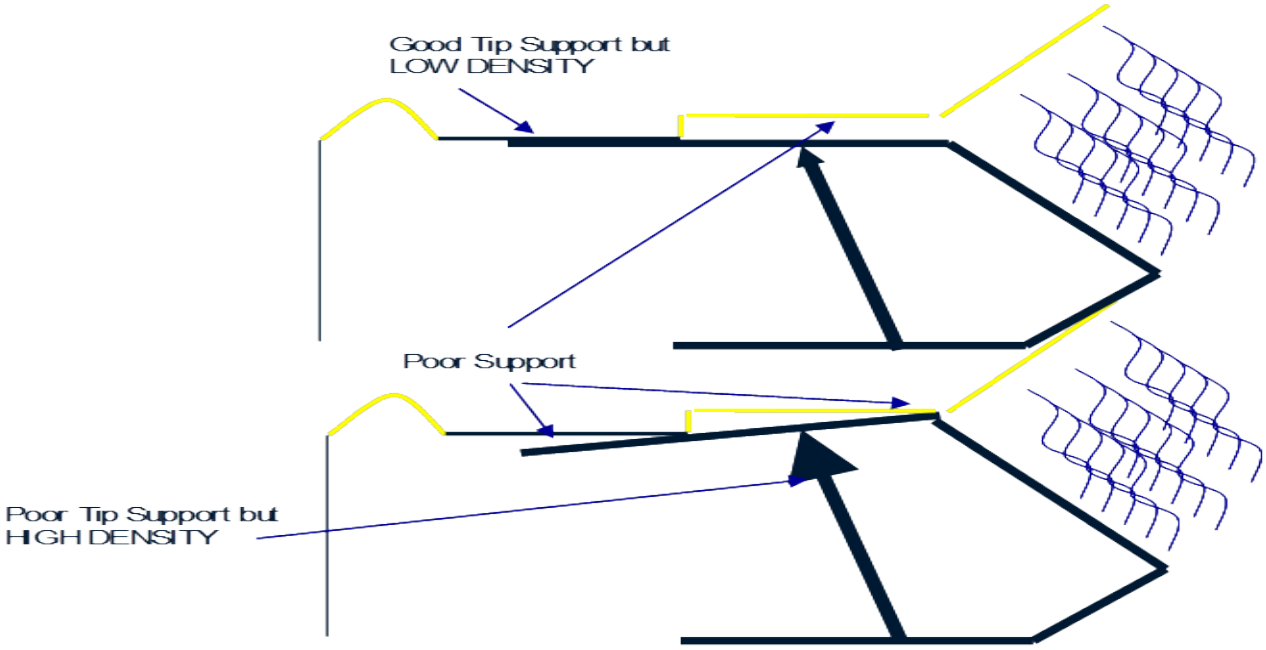

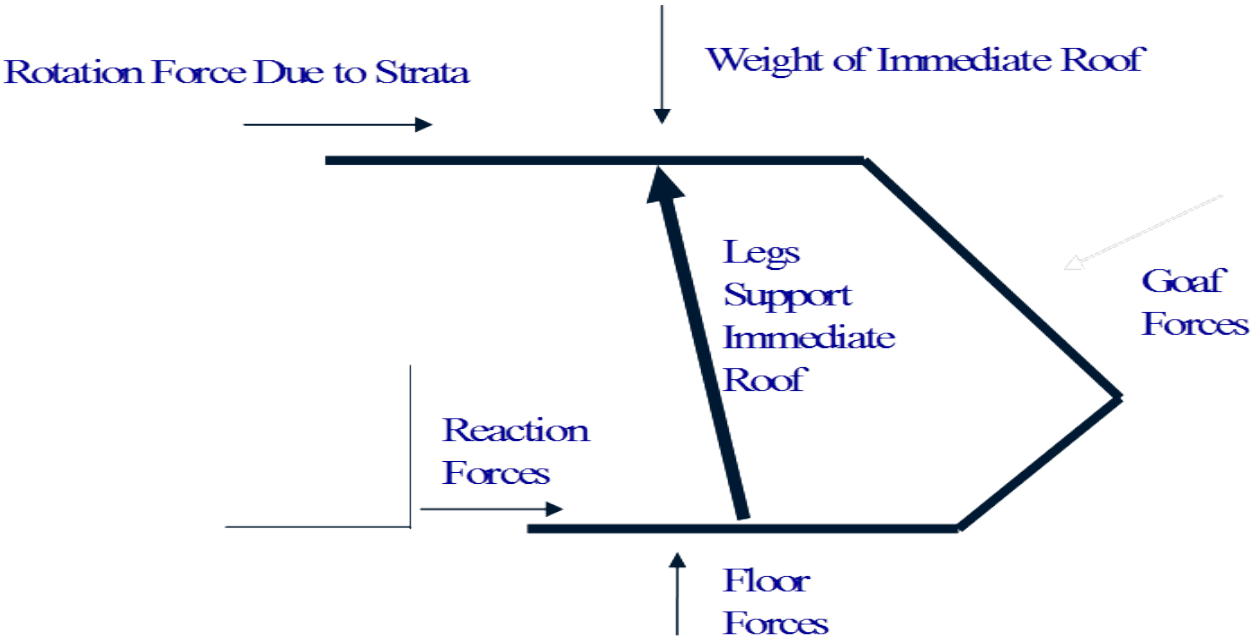

Do not turn Leg Set pressure off too early. It is important the setting pressure is maximised until the last possible moment eg. until the legs are pushing into a cavity and the support is setting at a poor canopy angle. This must be managed on the face by the crews under the direction and accountability of the Longwall Deputy.

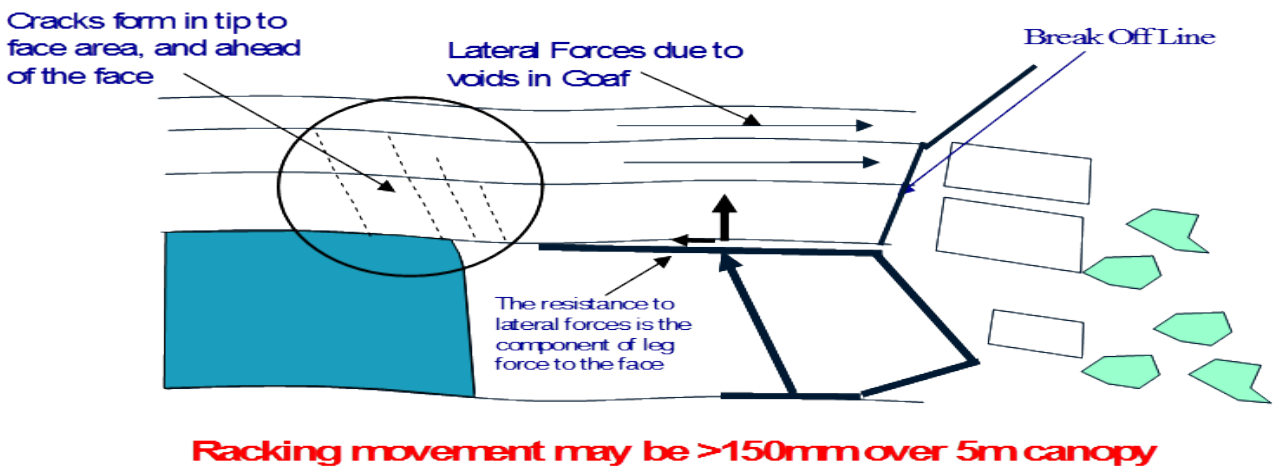

Any areas of the face where the Leg Set Pressure is removed must be reported on the Production Panel Supervisors report.

6.13 Straightening Shields

The shields can lean over from time to time and this must be corrected immediately, twisted supports result in:

- Poor contact and support to the roof
- Increased dust and debris ingress into the walkway
- Equipment damage
- Cavities and gate roadway failure

When supports are seen to be leaning over greater than ten (>10˚) degrees, these shall be straightened as soon as possible by:

- Shearer to cut a well graded floor
- Using side seals to stand the supports after retracting adjacent side seals to the shield that is being stood up
- No more than (one) 1 shield off the roof at any one time
- Checking side seal operating parameters
- Packing timber under the pontoons
- In poor roof areas, the Longwall must be consulted prior to action.
- TARPs for the longwall must be complied with all the time.

6.14 Anti-Topple Cylinder Logic

This Document outlines the logic for the control of the Anti-Topple cylinders fitted to the shields on the LW equipment for the LW face.

Requirements of the Anti-Topple rams on the following:

T/G Shields No146, No 147, No 148

All Anti-Topple cylinders are to provide a pulling force only, side seals can apply a push force to assist with alignment of the shields.

Operational Requirements:

Tailgate Shields

The Anti-Topple cylinder connect Shield No.'s146, 147,148

These cylinders are to be operated from the PMCR operating the shields.

6.15 Dust Suppression Standards

Dust management is controlled by the Air Quality Dust and Other Airborne Contaminants PHMP and longwall dust management procedure. Due to the low seam gas environment ventilation quantities and therefore velocities will be kept low, minimising dust being lifted into suspension from the coal clearance system. The longwall is equipped with dust suppression system utilising water sprays on shearer, shields and transfer points as well as a dust scrubber system to capture dust between the crusher and discharge hood. Control of personnel exposure to airborne dust will be restricted through safe standing zones on the inbye side of the shearer and moving roadway roof supports. Respiratory protection will be worn by personnel entering the longwall face in the form of P1 dust masks as a minimum. Permanent longwall mine workers will be issued with an Airstream helmet. Dust suppression systems on major longwall components are described below:

6.16 Roof Support

Each roof support has eight (8) spray nozzles. All the positions and quantity of the nozzles are shown on figure 1.

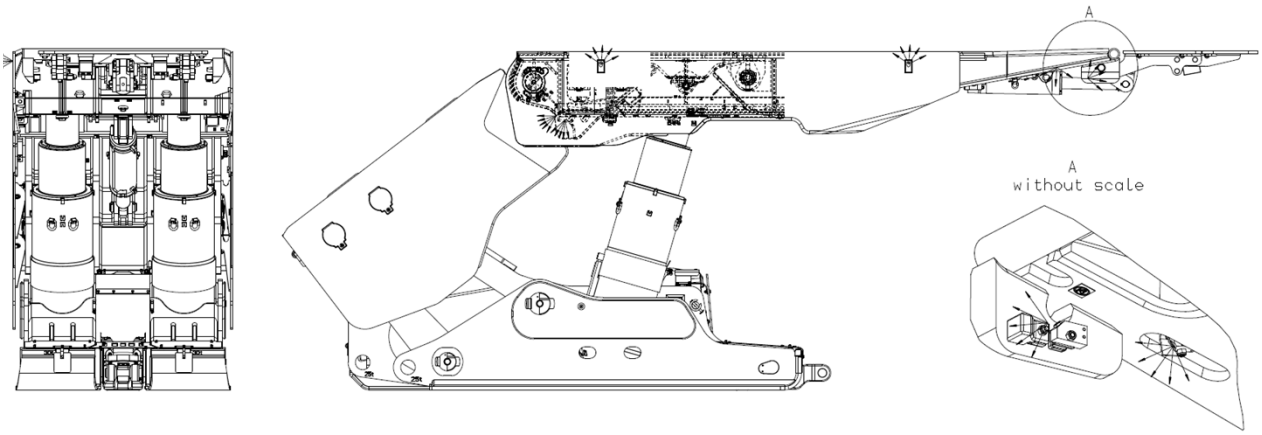

Figure Roof Support Sprays

Design:

1. Canopy Tip Spray (2) – located at the front of canopy with angle to the roof, the spray water can wet the newly exposed roof area during shield advancing.
2. Canopy Water Curtain Spray (2) – front sprays angled at 45˚ towards the face.

3. Side Seal Spray (2) – located close to the top of side shield with 15˚ angle towards the roof.
4. Lemniscate Spray (2) – located on the caving shield. A multi-function is to wash the lemniscate links and capture the dust come from goaf during shield advance.
5. All the functions are controlled by PMCR and defined in the automation specification.

6.17 Shearer

Shearer spray system is made of three sections include the shearer drum spray, shearer body spray and Ranging Arm Sprays.

Design Proposal:

1. Shearer Drum Spray is standard design with Pick back flushing sprays.
2. Shearer Body Sprays (8) - are designed on the ranging arm shroud of shearer to capture the dust and to generate the negative pressure on the goaf side. These sprays should require good protected.
3. Ranging Arm Sprays have 2 separate Spray locations to assist with control the dirty airstream to the face side of the AFC pan line.
   - 1st location is the Goaf side of the Cutter Drum called a Cowl Ring Spray. Both MG (RH) and TG (LH) Ranging Arms have this unit. There is 12 available Spray fitment Ports around the circumference of the Spray Bar, any outlets that will eject water against the Airflow will have the Sprays removed and the ports blocked off. fitted to the
   - 2nd location is towards the goaf side of the Shearer. There is 2 types of Shearer end sprays mounted to the Cutter Motor Cowl. Both these units have their Spray arrangements to work
     - 1 is a Shearer Clearer, this is mounted at the MG (RH) end of the Shearer. A Poly material type extension Arm that extends outwards towards the line of the Cutter Drum, in conjunction with a series of sprays directed at the coal face and in the direction of Air flow, also a series of Sprays directed at the conveying coal flow. Is utilised to start the trapped “Dirty Air Flow Path”
     - 1 is an End Mount Spray Bar. All the sprays should be angled towards tailgate cutter drum and AFC.
4. All the functions on / off are controlled by solenoid operation from the Shearer Transmitters, and defined on the automation specification.

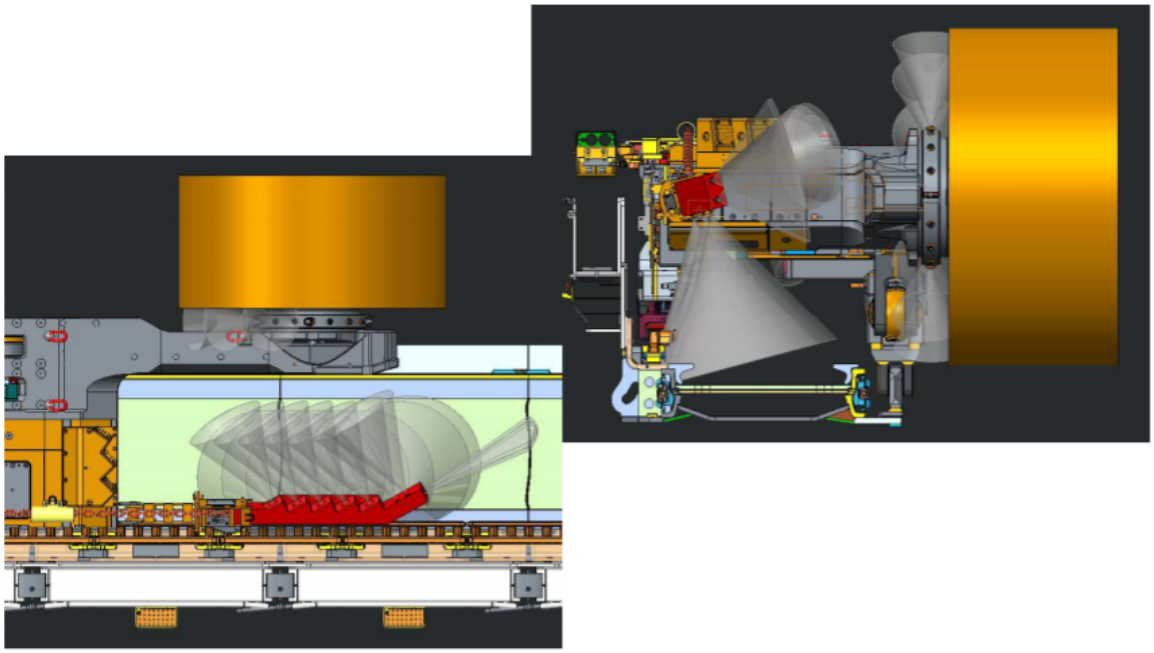

Figure: Shearer Clearer and Pick Flushing Spray Configuration

6.18 BSL/Crusher/Boot-end Insert Correct details

There are thirty-five (42) sprays totally on BSL, Crusher and Boot-end.

Design:

1. Interlaced Discharge Sprays (3) Venturi type sprays – located on the Hungry boards .
2. Maingate Sprocket Flushing Sprays (4).
3. Scrubber Sprays (4)
4. Scrubber Backflush Sprays (4)

Using Shearer Boosted water system.

5. Ramp Pan Sprays (3)
6. Mini Pan Sprays (6)
7. Crusher Sprays (4)
8. Convex Pan Sprays (3)
9. BSL Drive Dust Hood Sprays (4)
10. BSL Drive Transfer Sprays (2)
11. BSL Tension Section Slide Sprays (3)
12. Boot End Boogie Sprays (2).

Using Cooling Water system. All the functions are controlled by solenoid drive and defined on the automation specification.

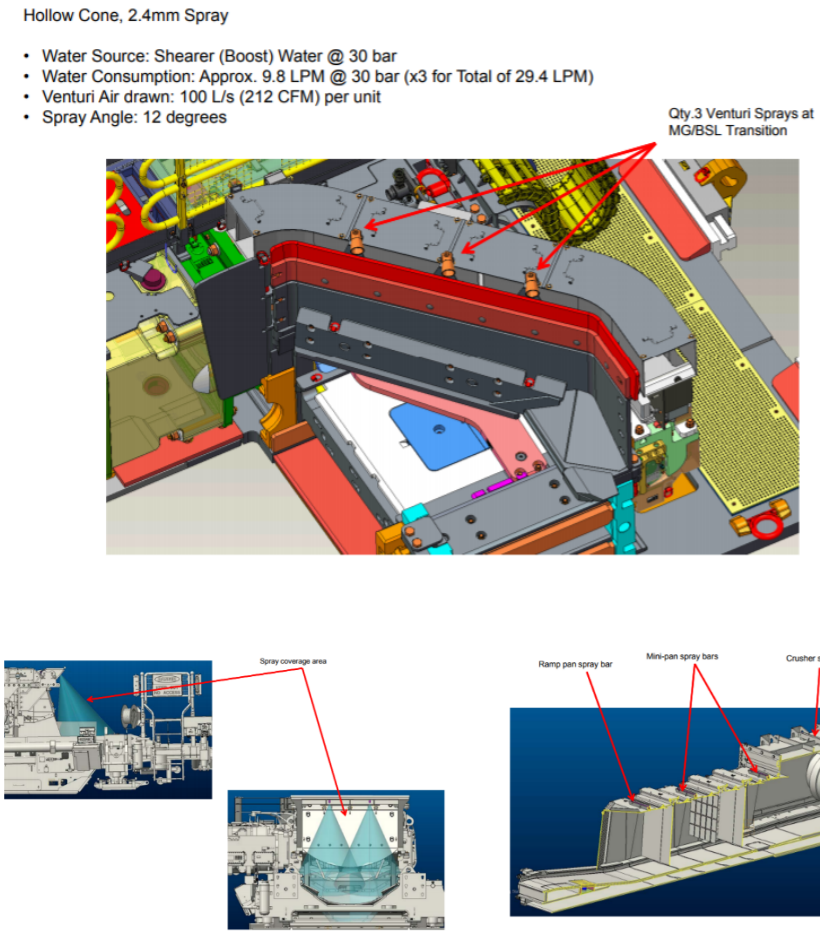

Figure BSL Sprays

6.19 Electrical Scrubber

1 x Dust Scrubber Unit mounted on top of the Stage Loader is installed outbye the crusher.

The scrubber unit exhaust air is vented to the Atmosphere.

Cooling Water for the scrubber unit is re-used in the BSL dust suppression sprays.

6.20 Ventilation Standards

The longwall face ventilation is optimised to reduce dust being re-generated by high velocity or turbulence across the face. Reference Plan – Ventilation PCP

Ventilation quantity may be reduced to provide a reduction in airborne dust. The consequential affects to the tailgate goaf methane fringe and tailgate gas make must be considered. Any changes to the ventilation must be under the instruction of the Ventilation Officer or Underground Mine Manager.

A brattice wing will be maintained between #1 shield and the Maingate rib line to direct intake air across the longwall face and minimise penetration of fresh air into the goaf.

6.21 Moolarben Coal Operations Ventilation Standards

Moolarben Coal Operations Environmental Monitoring Plan

Environmental / Gas Management Plan TARP

Spontaneous Combustion TARP

Moolarben Coal Operations Windblast Management Plan

Windblast TARP

10. ENGINEERING AND MAINTENANCE STANDARDS

10.1 Engineering Standards

- Understanding and utilising Isolation principles
- Familiarisation and understanding of equipment/operating parameters
- Competent and approved personnel
- Understanding and adherent to 12 step energy isolation and restoration plan
- Apply hierarchy of control principle toward issues/hazard reduction process
- Utilise industry standard issue resolution tools to identify issue, review options for rectification, plan and review change. (RCA/ICAM/SWOT/Bowtie, Act, plan, do, review)
- Utilise Safe Work Instruction (SWI) or Job Safety Analysis (JSA) to complete greater than basic tasks.
- Completion of shift notes with detail information of work load completed, parts or tooling requirement, machine condition
- Adherence to site tagging process
- Equipment to be maintained in a clean and non-cluttered condition as per design i.e. if there is no bracket to contain, mount, restrain it, it does not belong there.
- Preventative maintenance work orders are to be completed and returned in the nominated timeframe, with clear and detailed findings
- Corrective maintenance work orders are to be completed and returned in the nominated timeframe, with clear and detailed findings
- Equipment lifecycle inspections are to be completed in a time frame that allows for enough information to be gathered that will generate an accurate and valued equipment lifecycle prediction report
- All equipment monitoring devices will be maintained to an operable state at all times
- All equipment safety devices will be monitored and sent for test/inspection as per OEM and or RCM logic
- All maintenance inspections are to be reviewed against RCM principal logic

10.2 Maintenance

The purpose of this section is to provide information on Moolarben Coal Operations minimum requirements for establishing the maintenance strategy for the LW system to be operated at the Moolarben Coal Operations – Underground.

It will discuss the following areas of that process:

- Maintenance objective
- Preventative maintenance schedule
- Maintenance organisation structure
- Maintenance planning system
- Maintenance control system
- Maintenance data base

Information on relevant parts of the maintenance strategy for the LW system will be provided to assist in the development of the maintenance strategy for the LW system to be operated at the Moolarben Coal Operations – Underground.

A general maintenance objective that aligns with Moolarben Coal Operations business objectives for the project must be developed.

The maintenance objective for this project is:

To achieve the nominated cutting hours, LW system engineering availability and seam recovery as agreed between Production Manager and Longwall Engineer while complying with the acceptable levels of operational standards, plant condition, safety and costs

The maintenance objective must be broken down into sub-objectives that can be measured. The sub-objectives and Key Performance Indicators (KPI's) used to measure the level of achievement of each are shown below.

10.3 Nominated Cutting Hours

Greater than or equal to eighty (80) cut hours per week. This data will be taken directly from the Longwall Production Panel Supervisors shift reports

Cut Hours = PT in Yancoal time usage model

10.4 LW System Engineering Availability

The TUM Standard Time Structure is hierarchal t clearly define the amount of time plant or equipment is used for its primary function, whilst providing a series of distributed levels into which the remaining calendar time can be allocated. The figure below provides a graphical representation of the Standard Time Structure to be used.

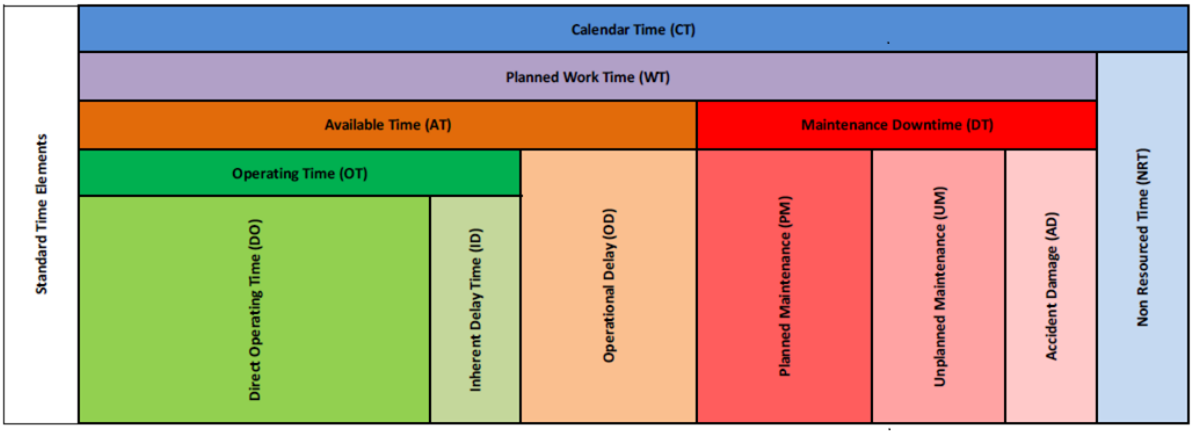

Standard Time Elements	General Definitions
Calendar Time (CT)	= Total time within a defined time period (in a non-leap year calendar time is 8760 hours)
Planned Work Time (WT)	= Total time the plant or equipment is scheduled for work (production or maintenance)
Non-Resourced Time (NRT)	= Time the plant or equipment is not scheduled to undertake work
Available Time (AT)	= Total time the plant or equipment is available to perform its intended function
Maintenance Downtime (DT)	= Total time the plant or equipment is not available to perform its intended function
Planned Maintenance (PM)	= Time the plant or equipment is scheduled for planned maintenance
Unplanned Maintenance (UM)	= Time the plant or equipment is scheduled to operate and is unavailable due to unplanned maintenance
Accident Damage (AD)	= Time the plant or equipment is not available due to repairs required as a result of an accidental incident
Operational Delay (OD)	= Time the plant or equipment is available but not performing its primary function
Operating Time (OT)	= Time the plant or eqipment is performing its primary function
Inherent Delay Time (ID)	= Time the plant or equipment is operating but not producing
Direct Operating Time (DO)	= Time the plant or equipment is operating and producing

10.5 Productivity

Productivity is a measure of the production rate of a piece of plant or equipment. When multiplied by operating time, total production (bcm, tonnes, metres etc.)

$$\text{Productivity} = \frac{\text{Quantity (volume, tonnes, metres)}}{\text{Operating Time}}$$

10.6 Availability

Availability is the measure of the time that a plant and equipment is available to perform its intended function over a defined period. It measures the impact Maintenance downtime has on performance. It is defined as the percentage of planned work time that plant or equipment is available to operate

$$\text{Availability \%} = \frac{\text{Operating Time (OT)}}{\text{Planned Work Time (WT)}}$$

10.7 Utilisation

Utilisation is a measure of how much available time plant or equipment is utilised performing its intended function. It is defined as the percentage of Available time that plant or equipment is operating

$$\text{Utilisation \%} = \frac{\text{Operating Time (OT)}}{\text{Available Time (AT)}}$$

10.8 Operational Standards

Greater than or equal to 95% compliance with the Operational Standards set out in these O&M Guidelines as measured by the fortnightly Operational Standards compliance audit. The Operational Standards compliance audit can be found in the audits section of these O&M Guidelines.

10.9 Plant Condition

Will be tracked via the onsite MMS and equipment Lifecycle data base. Day to Day fit for purpose plant condition will be maintained by the LW maintenance crew and adherence to the Engineering standards

10.10 Costs

No greater than 5% variation from the approved repairs and maintenance budget for the LW system reviewed monthly.

10.11 Preventative Maintenance Schedule

When developing the LW system's preventative maintenance schedule MCO will conduct a RCM review of the equipment's functional requirements and identify any reasonable maintenance task required to be conducted that will assist in reducing unplanned breakdown maintenance and increasing personal safety while operating the equipment.

A gap analysis will be carried out between the Caterpillar maintenance life plans and the Moolarben preventative maintenance schedule. Any maintenance activity that is in the Moolarben maintenance schedule but not in the Caterpillar maintenance life plans will be identified. Each of these tasks will be analysed to determine if they align with the principles of RCM and will contribute to the reliability of the LW machine operating at MCO.

Tasks proven to be worthy of inclusion will be added to the preventative maintenance schedule, this review will be documented.

At this stage a gap analysis will be carried out between the Caterpillar maintenance life plans with the additional MCO maintenance tasks, if any, and the existing MCO preventative maintenance schedule. Any maintenance activity in the MCO maintenance schedule but not in the Caterpillar maintenance life plans with the additional MCO maintenance tasks will be identified. Each of these tasks will be analysed to determine if they align with the principles of RCM and will contribute to the reliability of the LW machine operating at MCO.

Tasks proven to be worthy of inclusion will be added to the preventative maintenance schedule, this review will be documented.

10.12 Maintenance Work Load

The total maintenance work load is a combination of the preventative maintenance work load and the corrective maintenance work load. The total work load must be accurately estimated so it can be integrated with the LW systems production targets to form a combined production and maintenance schedule that achieves the business objectives of Moolarben Coal Operations.

10.13 Preventative Maintenance Schedule

The man hours required to carry out the tasks that make up the preventative maintenance schedule for the LW system at the Moolarben Coal Operations need to be estimated. Each task should have a time frame allocated to it for this purpose. These estimates can come from external sources such as the OEM or MCO's preventative maintenance schedule; however, a more accurate result will come from estimates made by the Moolarben Coal Operations maintenance employees as they will be carrying out the work.

10.14 Corrective Maintenance

The corrective maintenance work load is more difficult to estimate. It consists of emergency or breakdown maintenance tasks and deferred maintenance tasks. The breakdown component of the corrective maintenance work load can be estimated by reviewing historic data regarding engineering availability at the Moolarben Coal Operations and Austar. The Caterpillar maintenance life plans will also contain information on the corrective maintenance work load that was extracted during the RCM process.

10.15 Maintenance Organisation Structure

The Longwall maintenance team is build-up of the Longwall Engineer, Longwall Mechanical and Electrical Coordinators and a Maintenance Planner. These men are responsible for planning and providing the technical knowledge required for the on-shift tradesman to execute the required maintenance activities.

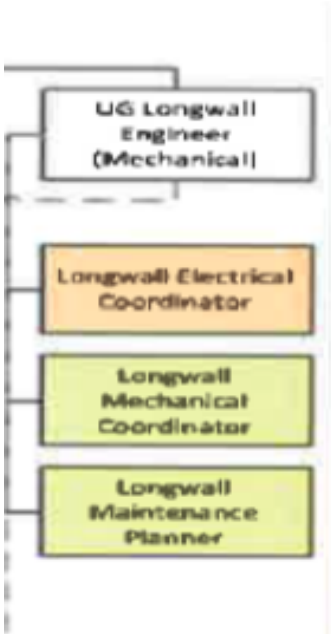

10.16 Resource Structure

The maintenance resource structure is designed to match the maintenance requirements developed from the Reliability Centred maintenance principles.

a) Workforce

The MCO LW system maintenance workforce will undergo comprehensive regular training that is required to satisfy the business requirements.

Note: Condition monitoring (wear surveys and oil sampling) will be carried out by contract labour in maintenance windows.

VA will be carried out by contract labour during production shifts where practical.

b) Technical Information

Technical information will be made available to the work force to enable them to safely, efficiently and effectively carry out the tasks that make up the maintenance work load. This information will be available in both soft and hard form at the longwall.

This information will be transferred to the work force via

Training Tool Box Talks (TBT)

Work Instructions

Paper manuals in the crib room

Electronic copies of the manuals via the computers in the LW equipment

10.17 Maintenance Planning System

The work planning system assists in managing the way in which the maintenance workload is planned, scheduled, allocated and controlled. MCO will review their maintenance planning system regularly to ensure it allows for the efficient execution of the short term and long term maintenance work load of the LW system.

The planning system must also facilitate data collection after each maintenance task is complete, this data includes:

- Results of any inspections or test
- Time taken to carry out the task
- Any safety issues that occurred during the task
- Required deviations from the SWP provided to carry out the task
- Recommended improvements to the maintenance task

This data can then be reviewed to identify ways in which the effectiveness and efficiency of any future maintenance activities can be improved. This is an important part of the maintenance control process.

10.18 Audit Maintenance System

The maintenance management control activity is the most important component of the maintenance strategy for the Moolarben Coal Operations LW system. It is the tool used to refine the maintenance strategy to ensure it is delivering on the maintenance objectives and hence the business objectives.

This maintenance control process is a continuous improvement loop.

Each of the below steps must be carried out by the Moolarben Coal Operations LW maintenance management team to ensure the objectives set out in section **Error! Reference source not found.** of this document are achieved.

10.19 Establish Measured Maintenance Performance Levels

The KPI's have been chosen as the required performance level for the Moolarben Coal Operations LW system:

- 80 cut hours per week
- 92% LW system engineering availability
- 95% compliance with O&M Operational Standards
- 98% compliance with preventative work orders
- Less than 5% over the approved repairs and maintenance budget

10.20 Continuous Measurement of Performance Achieved using Actual Figures

This requirement must be facilitated by maintaining databases with information from the below sources:

- Cut hours – LW Deputies report.
- LW system equipment availability – LW Deputies shift report.

- Total longwall tons reading from the longwall belt weightometer
- Operational Standards compliance – Monthly audit sheet
- Costs – the Moolarben Coal Operations SAP system

10.21 Comparison of Actual Performance Figures with Target KPI's

Utilising information recorded above in section 2.15, the following documents need to be produced to enable this comparison to occur. This comparison will highlight where corrective action is required to align actual performance with the targets:

- Cut hours – Weekly process availability report
- LW system equipment availability - Weekly process availability report
- Operational Standards compliance – Monthly audit sheet
- Equipment condition audits compliance – Monthly audit sheets
- Costs – Monthly costs report

10.22 Identification and Implementation of Corrective Actions to bring the actual performance into line with agreed targets

Once the need for corrective action has been identified the task of establishing what action will be needed and how to implement it is awarded to the appropriate member of the maintenance management team. This is documented in the weekly maintenance activity review meeting minutes. The progress of each identified corrective action is reviewed every week until it has been implemented.

Prior to formulating any corrective action the maintenance activity carried out by the maintenance department, and operating activity carried out by the operations department must be reviewed to ensure that they are both aligned with their existing respective strategies.

10.23 Table of Reports

Report	Detail Description and Source	Frequency
Preventative Maintenance (PM) workload completion report.	% of completed PM work orders to scheduled PM work orders for the period	Weekly
Preventative Maintenance (PM) workload completion report.	List of all outstanding PM work orders for the period. The list is to include a description of the task, when the task was required to be completed by and what equipment the task was to be completed on.	Weekly
Corrective Maintenance (CM) workload completion report.	% of completed CM work orders to scheduled CM work orders for the period.	Weekly
Corrective Maintenance (CM) workload completion report.	List of all outstanding CM work orders since the LW equipment went into service. The list is to include a description of the task, when the task was required to be	Weekly

Report	Detail Description and Source	Frequency
	completed by and what equipment the task was to be completed on.	
Equipment breakdown report	% of engineering availability for the LW machine for the period, measured in accordance with the respective Operational and Maintenance guidelines KPI	Weekly
Equipment breakdown report	Cut hours for the LW machine for the period, Measured in accordance with the respective Operational and Maintenance guidelines KPI.	Weekly
Equipment breakdown report	List of each breakdown for the period, to include; (This has been agreed to and will come from the MCO DMO data base. It will be in the form of a report. It will be provided to YTD electronically) 1 Equipment delay occurred on. 2 Description of delay 3 Date of delay 4 Time to rectify delay 5 Root cause of delay (This will be provided for delays that are of greater duration then 60 minutes or a re-occurring delay that has an accumulative total of greater than 60 minutes in a 12 hour shift.)	Weekly
Warranty workload report.	List of all new Warranty work orders raised for the period.	Monthly
	List of any outstanding warranty work orders since the LW equipment went into service.	Monthly
	MCO do not currently utilise this facility in SAP. It is coming but it is dependent on head office to come to fruition. Peabody will continue to work towards implementing this facility. Once it is up and running the above-mentioned reports will be provided to YTD from the MCO SAP data base in and electronic format. YTD will keep a record of all warranty claims for the LW system for the project in their own data base as a duplicate process.	Monthly

10.24 Plant Register

The first step that must be taken in the development of the above data bases is for MCO to allocate every item of plant in the LW system a unique identification code or plant number. This plant number must be physically attached to the relevant plant and recorded in the mines inventory data base.

The function of the plant inventory data base is to record basic identifying information on every piece of equipment in the LW system under its own unique identification code. Once a piece of equipment has been allocated its unique inventory code and it has been added to the inventory data base all the maintenance information regarding that equipment can be stored under the items unique identifying code. This inventory data base must provide unique identification codes for all items down to the component level so that data can be collected and stored for items such as motors, gear boxes, etc.

As mentioned above the information collected and stored must include all maintenance activities carried out on each item of plant and production delay details but should also include information regarding:

- Costs
- Short term maintenance planning
- Long term maintenance planning
- Engineering availability
- Technical information
- Preventative maintenance schedule

11. COMMUNICATION

11.1 Reporting Standards

Numerous reports must be completed by the personnel working on the LW face and by the management team to assist with the efficient management of the LW Unit. These reports will be and have been used to gather and convey information between all departments that have input into the management of the LW face. These reports will be the main tool used at the Moolarben Coal Operations to monitor, record, improve and archive information related to the LW Kit.

Report	Frequency
Daily Shift Plan (Developed from the Weekly Plan)	Daily
LW Maintenance and Production Schedule	Weekly
LW Deputies Shift Report	Shift
Shift Undermanager's Report	Shift
Statutory Reports (Mine Inspection System)	Shift
LW Creep Control Report	Shift
LW Electrical Report	Shift
LW Mechanical Report	Shift
LW Production ROM tonnage	Weekly

Report	Frequency
Costs – the Moolarben Coal Operations procurement and stores database	Monthly
Operational Standards compliance Audits	Weekly
Maintenance Activity Audits	Monthly
LW system equipment availability / Utilisation	Weekly/Monthly
InSeam Quality –Surveyors and Citec Weightometers CHPP actuals	Weekly
Pulse Delay Report	Daily/Weekly/ Monthly
LW Authority to mine	Chainage driven
LW Compliance report – Planned to actual work orders completed	Monthly
LW equipment Life Cycle inspection reports	Monthly

11.2 Reporting Face Information

The reporting of key issues is considered vitally important for the safe and efficient operation of the LW System.

Items that should be reported include:

- Any incidents or accidents (documented report)
- Face conditions and TARPs
- Maingate and tailgate chainage positions
- Creep measurements
- Pan angles where appropriate (eg. in relation to canopies being hit, flight plan grades, etc.)
- Extraction heights
- Any leaning supports requiring action
- Floor horizon, locations where not correctly graded along or into face
- Any anomaly requiring the attention of the following shift
- All delays
- Corrective actions implemented during shift
- All maintenance completed and further requirements
- Production reporting including Shearing Rate.
- Anything you may think that could improve the safety or efficiency of the LW system at Moolarben Coal Operations

11.3 Reporting Protocols

To ensure any event is dealt with efficiently and appropriately it is essential all persons communicate through their immediate supervisor. This is paramount when dealing with unplanned delays. The required reporting protocols are detailed in the following Moolarben Coal Operations Delay Escalation flowchart.

11.4 Moolarben Coal Operations Unplanned Delay Procedure

PRODUCTION INTERRUPTION COMMUNICATION PROTOCOL

This protocol is applicable 24 hours per day – 7 days per week

	Production interruption Duration	Action Required
Level 1	Immediately	Face crew to notify Deputy Investigate and problem solve as appropriate
Level 2	After 30 minutes	Deputy to contact Control Room Operator, Shift Undermanager and the relevant Engineering Supervisor for the shift Review actions, initiate additional actions as required
Level 3	After 2 hours or anticipated to be greater than 2 hours	Shift Undermanager or Control Room Operator is to ensure the relevant Process Area Mechanical and/or Electrical Coordinators are contacted Review actions taken, Plan and initiate additional action to be taken
Level 4	After 4 hours or anticipated to be greater than 4 hours	Shift Undermanager or Control Room Operator to contact the Production Manager and relevant Process Engineering Manager Relevant Statutory Engineer to be contacted for Safety or Statutory matters only Review actions taken and proposed actions, initiate additional actions as appropriate
Level 5	After 8 hours	Operations Manager and/or Senior Site Engineer to be kept informed by shift Supervisor at least every 8 hours until the issue is resolved

Note:

For Production Interruptions, greater than 4 hours a written incident report must be completed.

The incident report is to identify -Events leading up to the delay

-Type and duration of delay

-Immediate actions taken

-Proposed medium and long-term actions

The aim of this report is to identify the root cause of the incident and identify appropriate actions to ensure the incident is not repeated. The incident report should be added to as actions are taken, so a total picture of what happened can be understood.

Definitions

Deputy	Panel Deputy
Shift Undermanager	Shift supervisor
Engineering Supervisor	Mechanical and /or Electrical Shift Engineers on shift
Process Area Coordinator	Development Mechanical Coordinator, Development Electrical Coordinator, LW Mechanical Coordinator, LW Electrical Coordinator, Conveyor Coordinator, Pumping Coordinator
Process Engineering Manager	Development Engineer, Outbye Services Engineer, Longwall Engineer
Production Manager	Undermanager in Charge
Senior Site Engineer	Senior Site Engineer
Statutory Engineer	Mechanical Engineer in Charge, Electrical Engineer in Charge,
Operations Manager	Statutory Mine Manager and U/G Project Operations Manager
Control Room Operator	Person responsible for communications between the surface & underground operations

This protocol does not change or override the Communications procedure to contact and keep the **CONTROL ROOM** informed

11.5 Expected level of performance for each KPI

The expected levels of performance for each of the KPI's are shown below in Table 1.

KPI	Required Performance Level
LW system cutting hours per week (Utilisation)	80 hours
LW system Engineering availability	92%
LW system level of compliance with Operational Standards	95%
LW system level of compliance with Plant condition audits	95%
LW system Loss Time Injury (LTI) frequency rate	0

Table 1. Required KPI performance level

11.6 KPI Performance Review

A weekly LW KPI performance review meeting will be held at the Moolarben Coal Operations. Table 2 below details the review frequency for each KPI:

KPI	Review Frequency
LW system cutting hours per week (Utilisation)	Weekly
LW system engineering availability	Weekly
LW system level of compliance with Operational Standards	2 Weekly
LW system level of compliance with plant condition audits	2 Weekly
Variation from the LW system operational and maintenance budget	2 Weekly

Table 2 - KPI Performance Level Review Frequency

The review meeting, as a minimum, must be attended by the Underground Project Manager, Longwall Engineer, Production Manager, Site Senior Engineer.

12. AUDITING PROCESS

12.1 Internal Audit

The LW system will undergo an internal audit during the extraction of every longwall panel.

12.2 Operational Audits

The Operational System sections will undergo periodic audits once each month, these audits will utilise the data generated by the SAP work order system to indicate compliance to business KPI's

12.3 Maintenance Activity Audits

The Maintenance System sections and the weekly reviews will undergo periodic audits once each quarter; these audits are generated by the SAP work order system.

12.4 External Audit

The LW system will undergo an external audit once every two (2) years.

12.5 LW System Standards Operational Audit Forms

Longwall audit forms are located on the Moolarben Coal Operations electronic data base

- Maingate Roadway Audit Form
- Face Audit Form
- Tailgate Roadway Audit Form
- Crib Room Audit Form
- Transformer and Audit Form
- RTVTR and Cut-Throughs Audit Form
- Longwall Belt Audit Form
- Monorail System Audit Form
- LW System Electrical Audit

12.6 Appendix A – Definitions of LW Mining Glossary Terms

Longwall Panel	Wide panel of coal extracted between two roadways
LW Production District	Area indicated on LW Production District plan, (transformer and pump station cut-through to 200m inbye of the LW face in connecting gate road and 100m outbye of the LW face in the tailgate) area inbye of LW Production District Sign and District Board.
TARP	Trigger Action Response Plan. A set of guidelines that define various conditions and the response to be taken when conditions change.
Hydraulic Powered Roof Support (Shield)	A hydraulic and electrically powered roof support shield that forms an almost complete metal shell around the working area of the LW face providing control (support density) of the roof and protection from the goaf.
Canopy	Metal roof beam of the shield.
Side Shield	Metal covers on the side of the shield that are spring loaded with hydraulic cylinders to apply pressure at various stages of shield operation to cover the gap between adjacent shields, providing metal to metal contact and total protection from falling roof material.
Flipper Bar	A metal extension to the main shield canopy that can be deployed to support the coal face or roof operated by hydraulic cylinders.
Web	The horizontal distance the shearer extracts each pass of the coal face (1060mm).
D/A Ram	Double action ram on the shield used to advance the shield and the AFC Pans.
Snake	Bend in the face conveyor pan line where it is advanced one web in readiness for the shearer to cut the next web of coal from the coal face.
Leg Set	Hydraulic system on the shields which ensures once a pre-set pressure is attained during the lower advance set cycle of setting, the support legs the system will automatically pressurise the legs to the pre-selected set pressure.
Shearer	An electrically powered mechanical machine with rotating cutter drums that traverses the length of the coal face cutting a web of coal each time.
DERDS	Double ended ranging drum shearer.
Underframe	Base frame for the shearer sections that sits astride the face conveyor.
Dint	The depth the shearer drum can cut below the normal floor horizon.
PFF	Pick face flushing.
BFF	Back face flushing.

Longwall Panel	Wide panel of coal extracted between two roadways
Radial	Mounted in vane of the cutting drum.
Trapping Shoe	Metal block attached to the goaf side of the underframe on which the shearer slides along the conveyor. The shape of the shoe is such it engages with the trapping rail fixed to the face side of the rack bar. This holds the shearer in a positive vertical position while allowing it to travel freely along the face.
AFC	Armoured face conveyor continuous chains with flight bars attached that transport the coal across the face to the maingate and into the BSL (Beam Stage Loader).
Face Pan line	The sections that makes up the AFC that has the pan toe, furnishings & cable tray.
Maingate Drive Units	Drive unit, consisting of drive frame, gearbox, coupling and electric motor, situated at the maingate of face supplying power to pull top AFC chain.
Tailgate Drive Units	Drive unit consisting of return frame, gearbox, coupling and electric motor, chain tensioner unit supplying power to pull bottom AFC chain situated at tailgate end of face.
BSL (Beam Stage Loader)	Carries coal from the AFC thru the crusher, lifting the coal to above the Boot-end to load onto the conveyor belt.
Crusher	Machine installed in stage loader to control size of coal and stone passing on to belt conveyor system.
DCB (District Control Box)	A flameproof electrical enclosure that controls the power supply to each of the longwall machines.
CME (Control Monitoring Enclosure)	A flameproof electrical enclosure that contains the control devices on the longwall face.
Boot-end	Tail end of belt that houses the tail roller and accepts and centres the coal loaded onto the belt from the BSL.
Conveyor Belt / Drive Head	Drive unit for conveyor belt, including motor and gearbox.
Loop Take Up	Automatic device at drive head used to take up the slack belt from pushing the longwall forward.
Belt Realer (Reclaimer)	Device for removing belt from loop take-up at the drive head area to allow continued operation of the longwall.
Mono-rail	A segmented beam that is hung from the roof in the maingate that carries the electrical, hydraulic compressed air water and communication services from the transformer and pump installation to the longwall face.

Longwall Panel	Wide panel of coal extracted between two roadways
Creep	The action of the longwall AFC and shields to move towards or away from the designed location reference position at the maingate due to the reaction of the seam cross gradient.
Face alignment	The straightness of the longwall face AFC and shields between to chainage measurement at each end of the longwall face.
Lead and lag of the face	The distance at which the maingate or the tailgate is in front or behind the other end of the face used to control the creep.
Maingate Roadway	Roadway adjacent to longwall panel, intake airway, and contains panel belt.
Tailgate Roadway	Roadway on opposite side of longwall panel – return airway.
PMCR (Programmable Managed Control Roof support)	This is the shield control unit that sends electrical signals to control the hydraulic functions that operate the shields.
Lock –out	The action of pushing in a switch that stops the AFC or the hydraulic fluid supply or shield operation.
Bretby	Cable handler installed from mid-point of travel on face to the shearer. Used to protect the cable and water hose, which supply electrics and water to the shearer and is pulled by the shearer.
Horizon Control	Extraction of the coal seam in line with the designed roof and floor of the seam.
Cutting Cycles • Uni-Directional (Uni-Di) • Bi-Directional (Bi-Di) • Variable Web	 Cutting cycle for the shearer where the shearer has to make two (2) passes of the face to achieve advance equal to the width of the drum (1 web). Cutting cycle of the shearer where the full seam section is extracted, in a single pass of the face one (1) full width of the cutting drum (1 web). A variation of Uni-Di where a % of the web is cut travelling to the tailgate and the rest of the web is cut travelling to the maingate then the supports are advanced.
Pump Station	The location of the hydraulic pumps used to supply the longwall face with hydraulic fluid at pressure; this can be mounted on a mobile machine.
Emulsion	A % mix of Solsenic oil and water used as a hydraulic fluid to operate the hydraulic functions associated with the LW face.
Transformer	The electrical device used to change the incoming power supply to a useable voltage for the LW equipment; this can be a mounted on a mobile machine.
Goaf	Area behind shields where roof is allowed to collapse.

Longwall Panel	Wide panel of coal extracted between two roadways
Convergence	The movement of the roof and floor towards one another.
OEM	Original Equipment Manufacturer.