ESP32 S3 WiFi Bluetooth Development Board

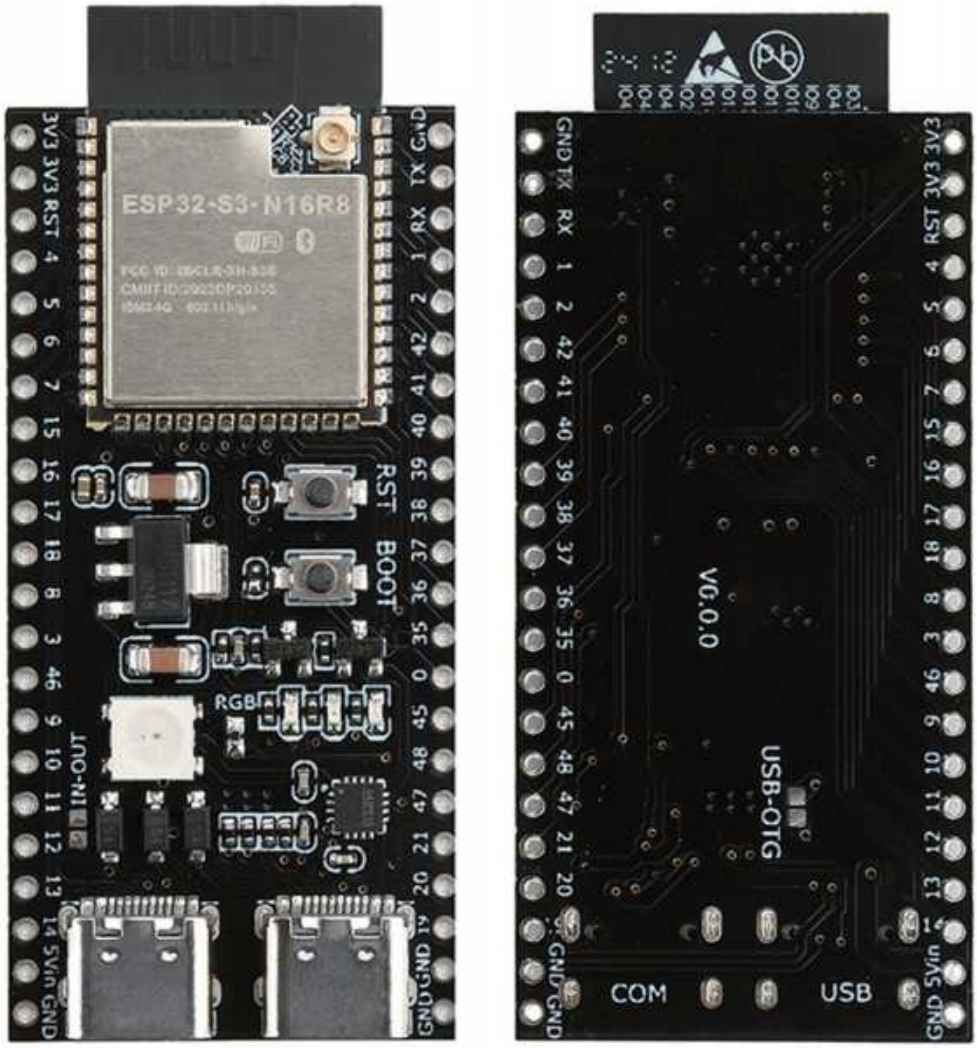

Catalogue

Product Introduction 1

Pinouts 2

Dimension 3

Instructions for use 4

Product Introduction

ESP32-S3 is a low-power MCU system on chip (SoC) that supports 2.4GHz Wi Fi and low-power Bluetooth ® LE) Wireless communication. The chip integrates high-performance Xtensa ® 32-bit LX7 dual core processor, ultra-low power co processor, Wi Fi baseband, Bluetooth baseband, RF module, and peripherals.

Product features:

1. High performance dual core processor: Integrated with a 32-bit LX7 dual core processor, providing powerful computing power and low-power performance.
2. Wi Fi and Bluetooth dual-mode support: Supports 2.4GHz Wi Fi and BT 5 (BLE), compatible with multiple wireless communication protocols.
3. Efficient data transmission: With a data rate of up to 150 Mbps, it ensures a fast and stable connection.
4. Multi interface: Comes with two Type-C interfaces, one can be used directly with a COM tag, and the other USB can be powered on using OTG or by holding down BOOT to display the port and download the program normally.
5. Low power and high power modes: Equipped with a low-power coprocessor and a high power mode of up to 20 dBm, suitable for various application scenarios.

Product Introduction:

This product is a development board based on the ESP32-S3-WROOM-1 module, with multiple IO ports and onboard WS2818RGB, corresponding to IO48. Comes with two Type-C interfaces, one can be used directly with a COM tag, and the other USB can be powered on using OTG or by holding down BOOT to display the port and download the program. The factory program automatically lights up RGB when connected to WiFi and turns off when disconnected.

Product parameters:

Working voltage: 3.3~5V

IO ports: 36 IO ports

Flash：N16R8 (16M)、N8R2 (8M)

PSRAM：N16R8 (8M)、N8R2 (2M)

2 I2C, 4 SPI interfaces

Size: 57mm * 28mm

Product List:

1X development board

2X needle arrangement (unwelded needle arrangement/welded needle arrangement can be selected)

be careful:

Be careful not to short-circuit the pins, as it may burn out the module.

Detailed module parameters can be obtained from customer service by requesting the module specification sheet.

This document only represents the product knowledge and parameters at the time of editing, and any changes in the future will not be notified separately.

Product Pin Description

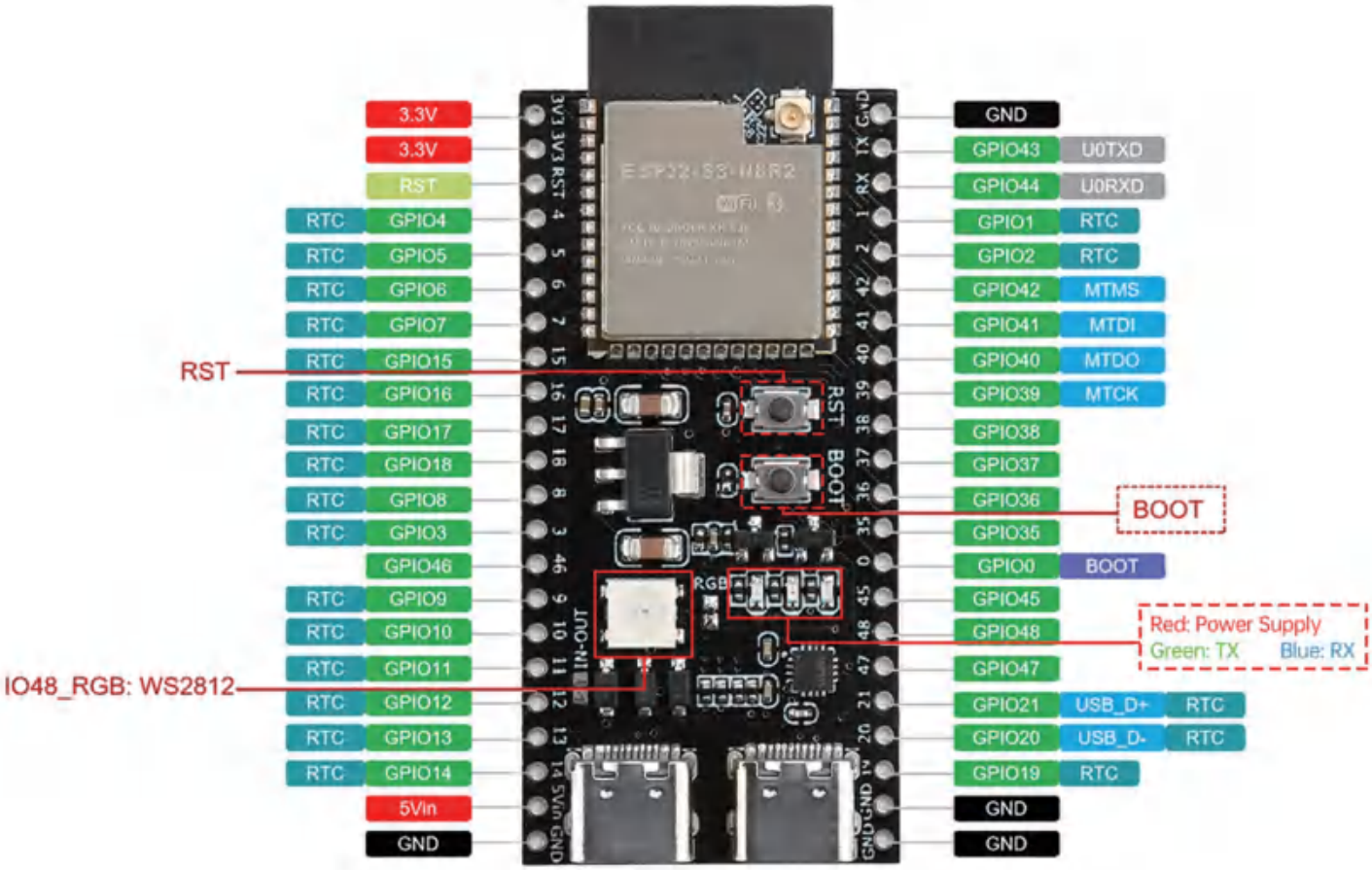

Product size

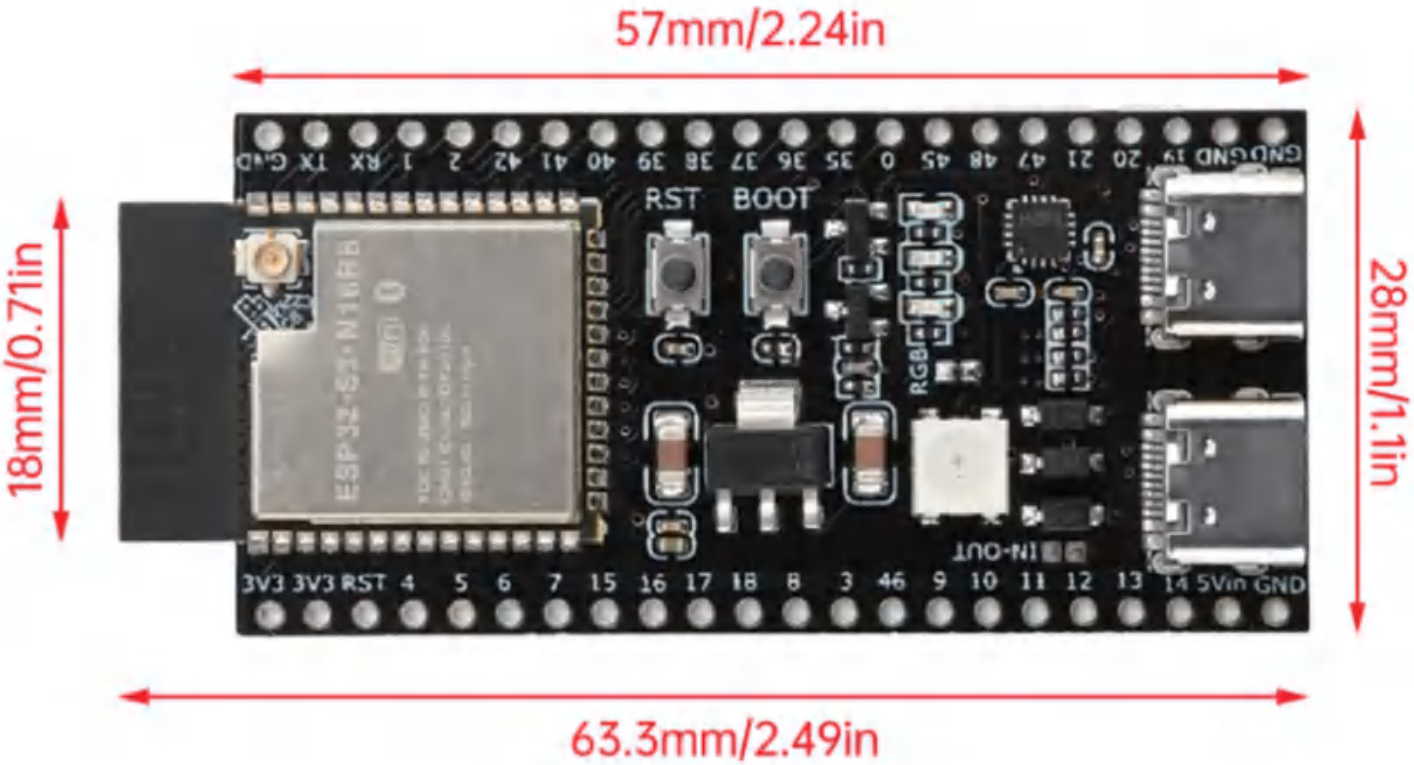

Instructions for use

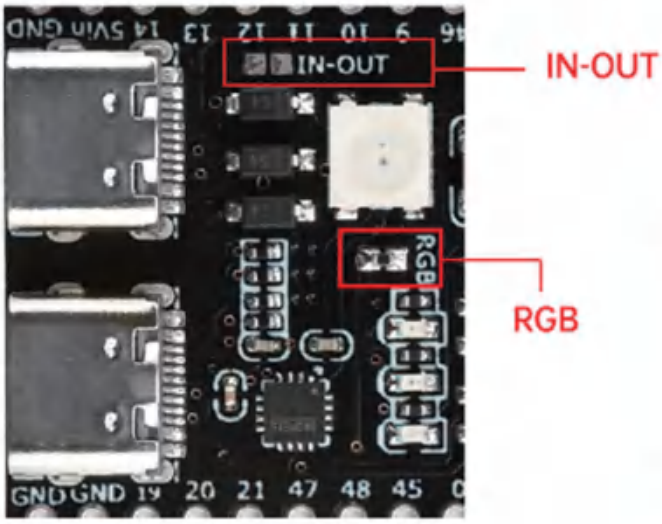

IN-OUT: Short or use 0 ohm resistor to connect the 5Vin pin to output 5V.

RGB: Short or use 0 ohm resistor to connect the RGB lamp can be used normally (default connection).

USB-OTG: Short or use 0 ohm resistor to connect, the Type-C port of the silk-screened USB can be used for OTG function.

Product usage:

Taking Arduino IDE 2.2.1 version lighting up RGB as an example

1. Install the WS2812 library corresponding to ESP32 first

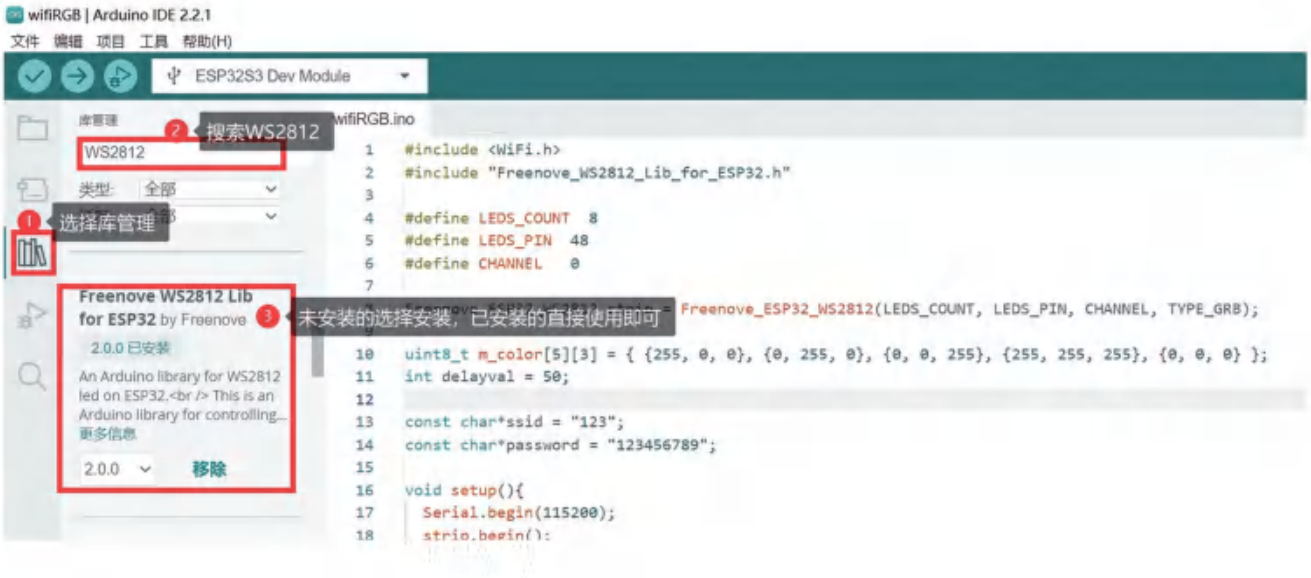

2. Select an example, find the corresponding library, and open the RGBW example

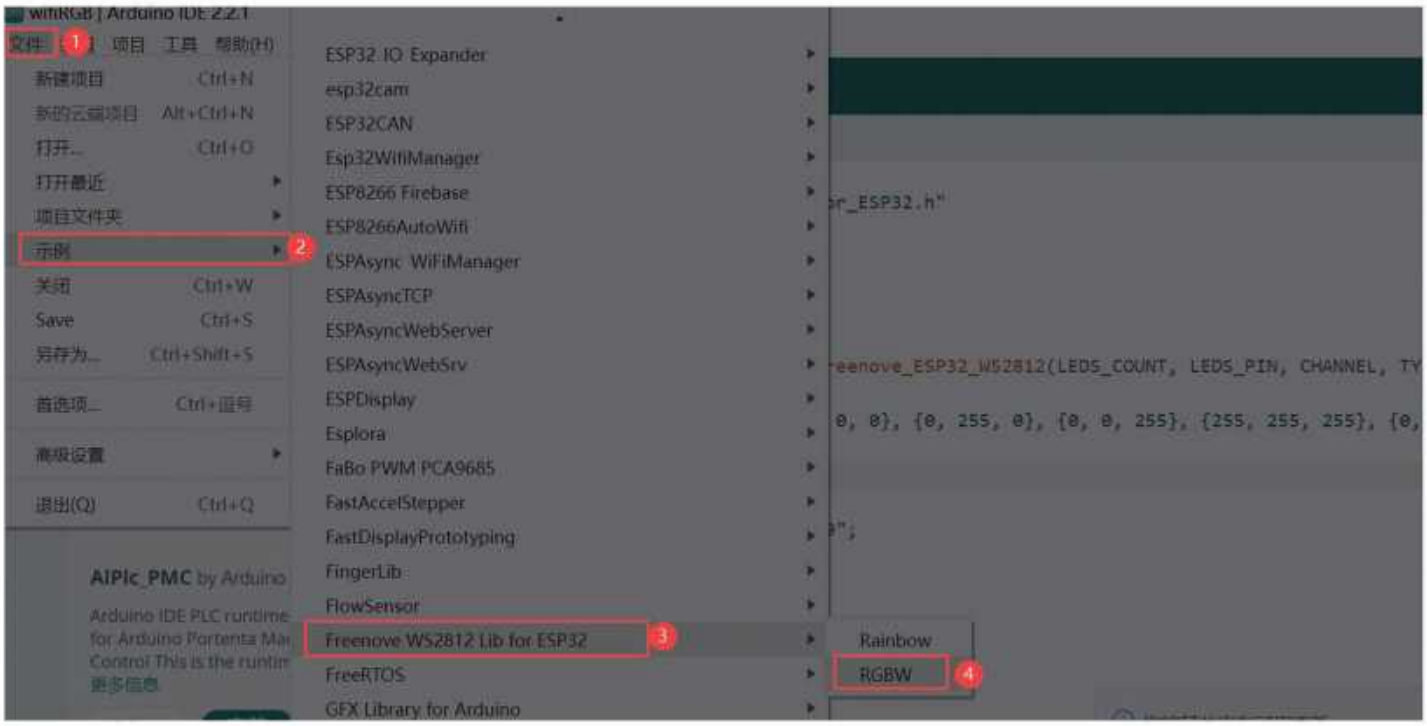

3. Modify the LEDD_PIN defined in line 4 of the program to 48
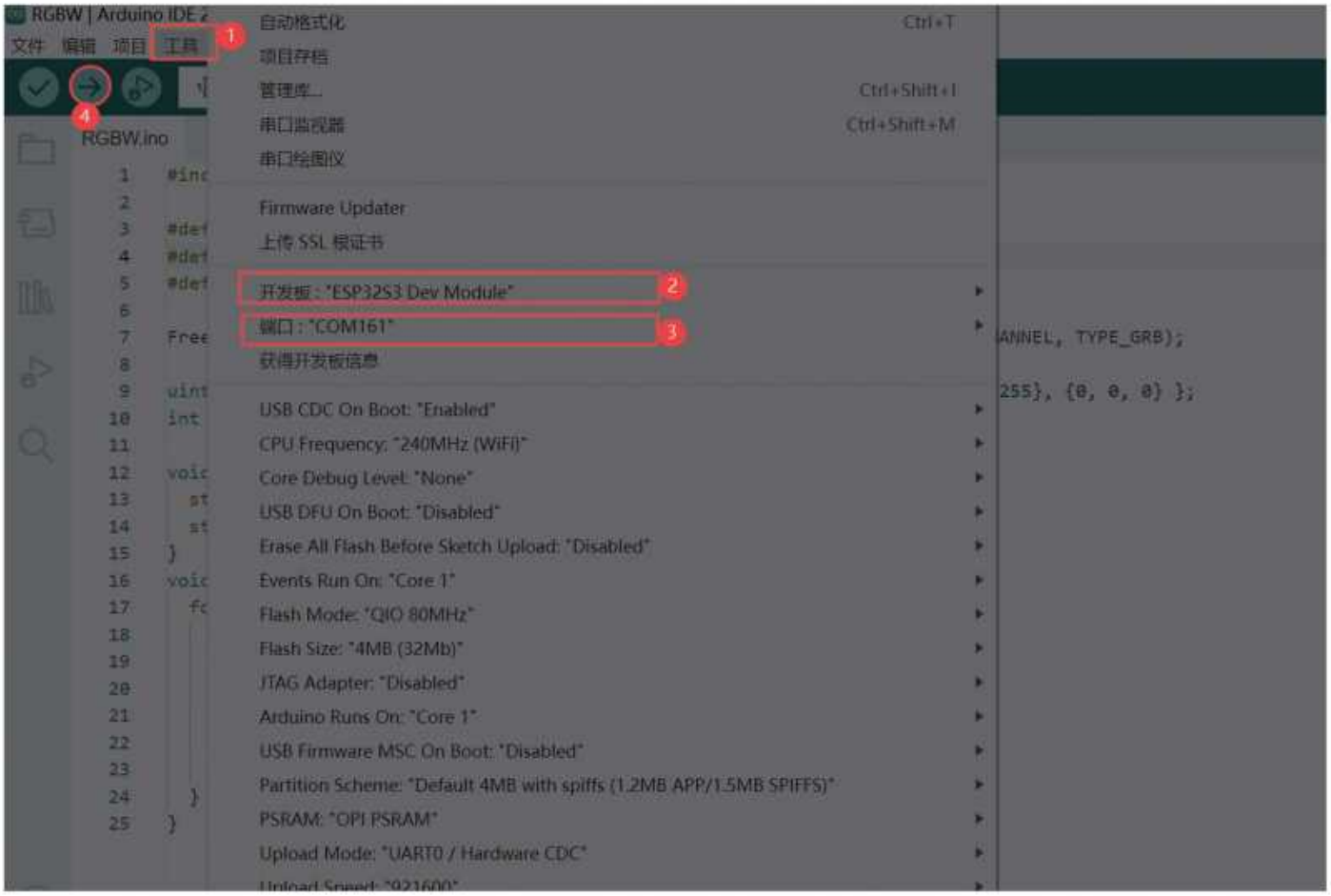
4. Select the port and development version and click upload to proceed