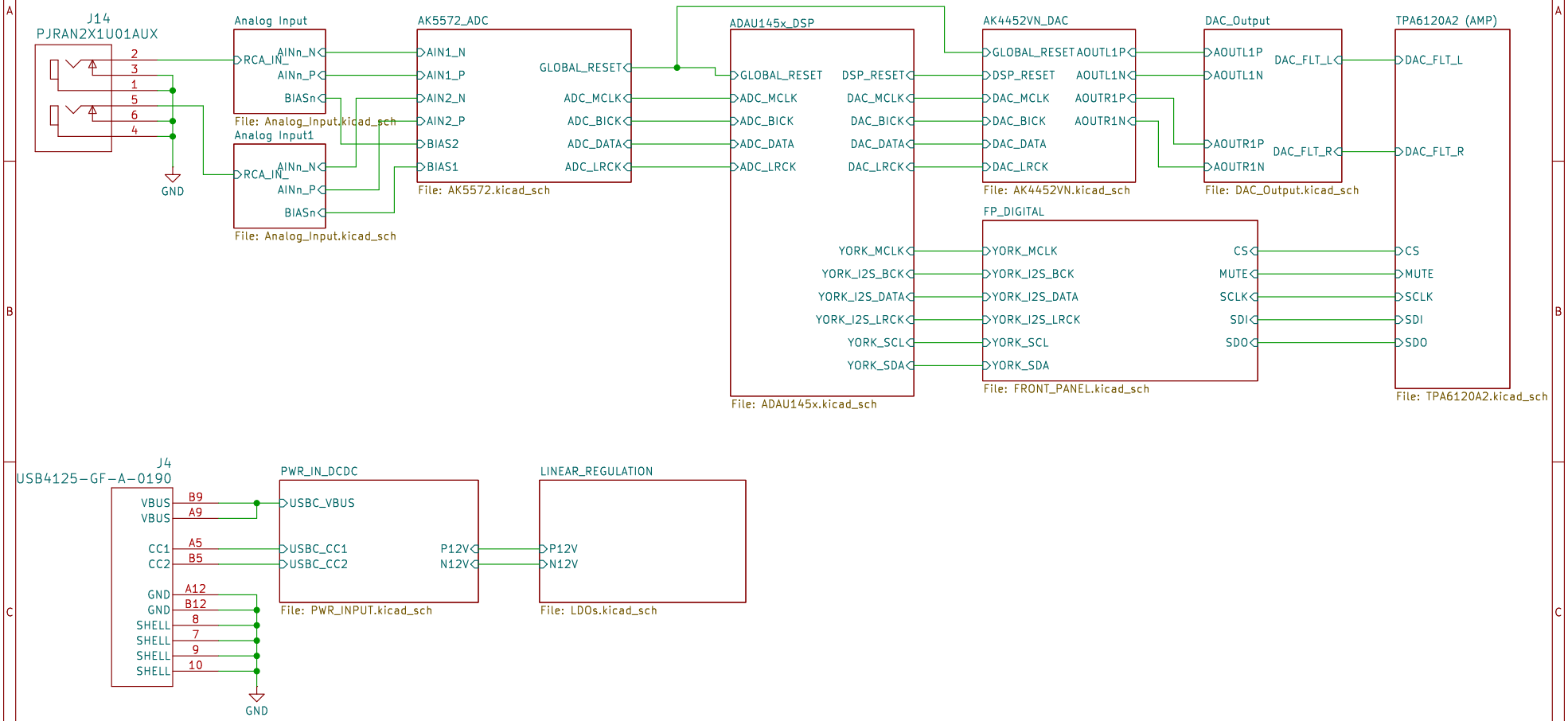


Sheet: /
File: ADAU1450.kicad_sch

**Title:**

| Size: A | Date: | Rev: |
|---|---|---|
| KiCad E.D.A. 9.0.6 | | Id: 1/11 |

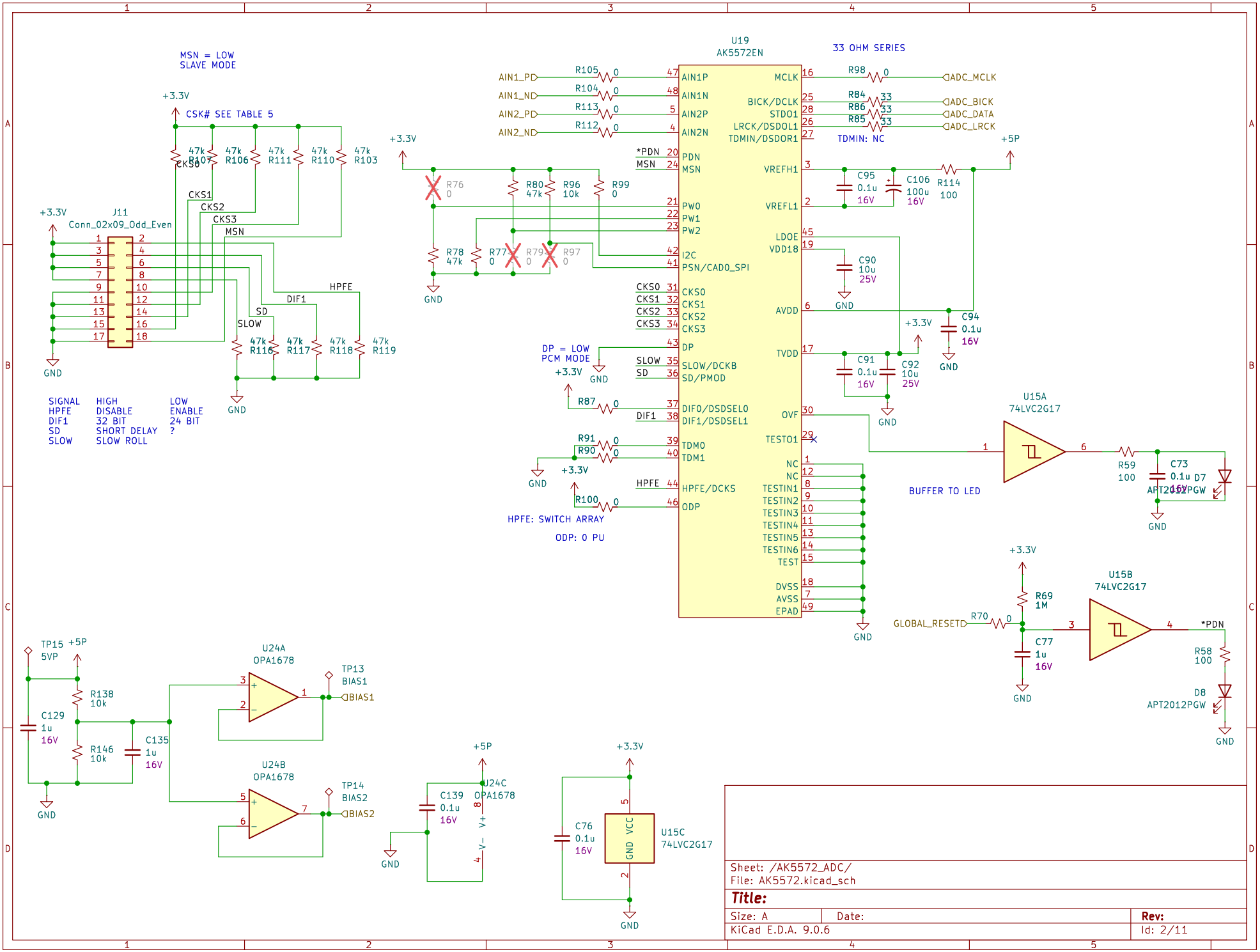


Sheet: /AK5572_ADC/
File: AK5572.kicad_sch

**Title:**

| Size: A | Date: | Rev: |
|---|---|---|
| KiCad E.D.A. 9.0.6 | | Id: 2/11 |

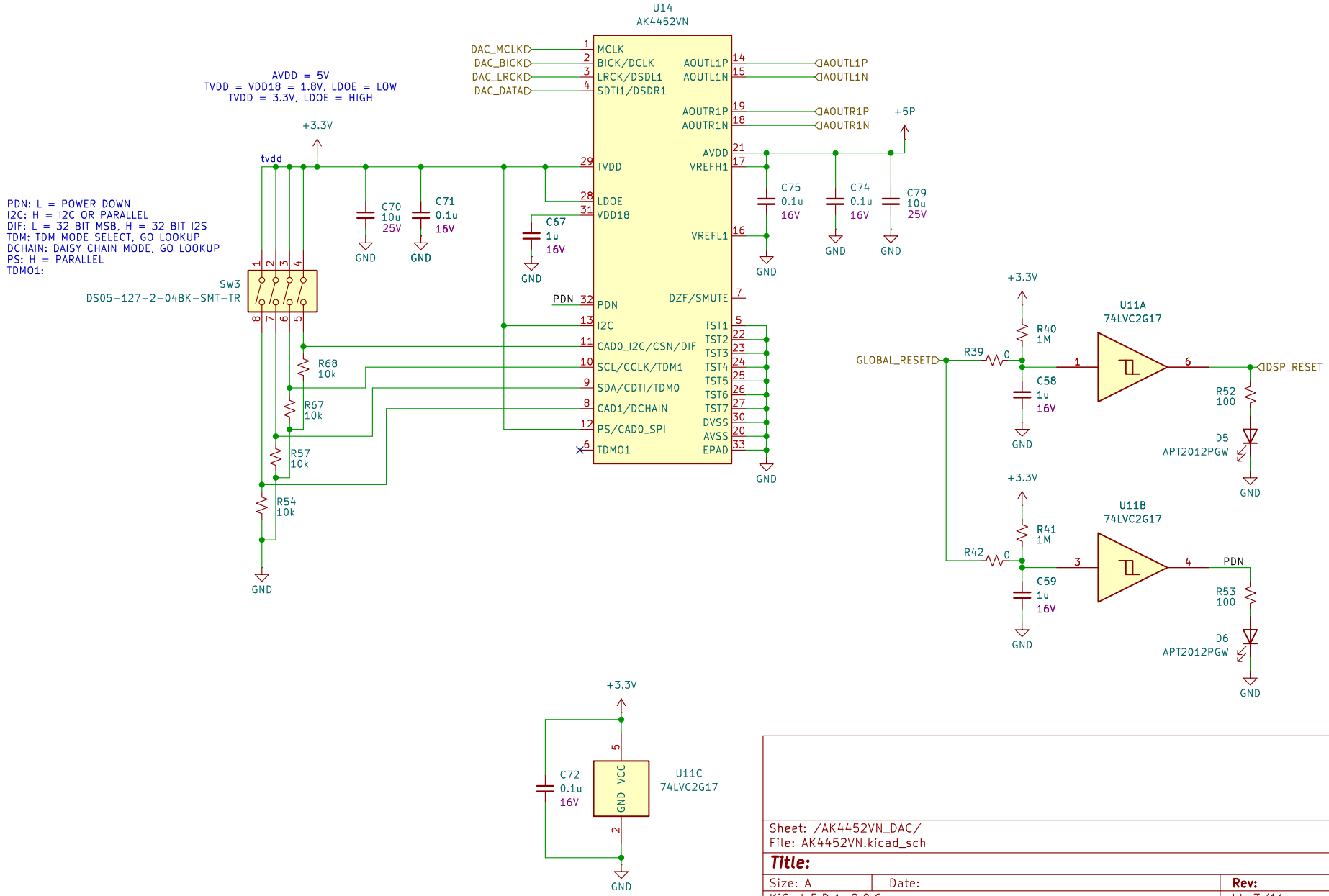


Sheet: /AK4452VN_DAC/
File: AK4452VN.kicad_sch

**Title:**

| Size: A | Date: | Rev: |
|---|---|---|
| KiCad E.D.A. 9.0.6 | | Id: 3/11 |

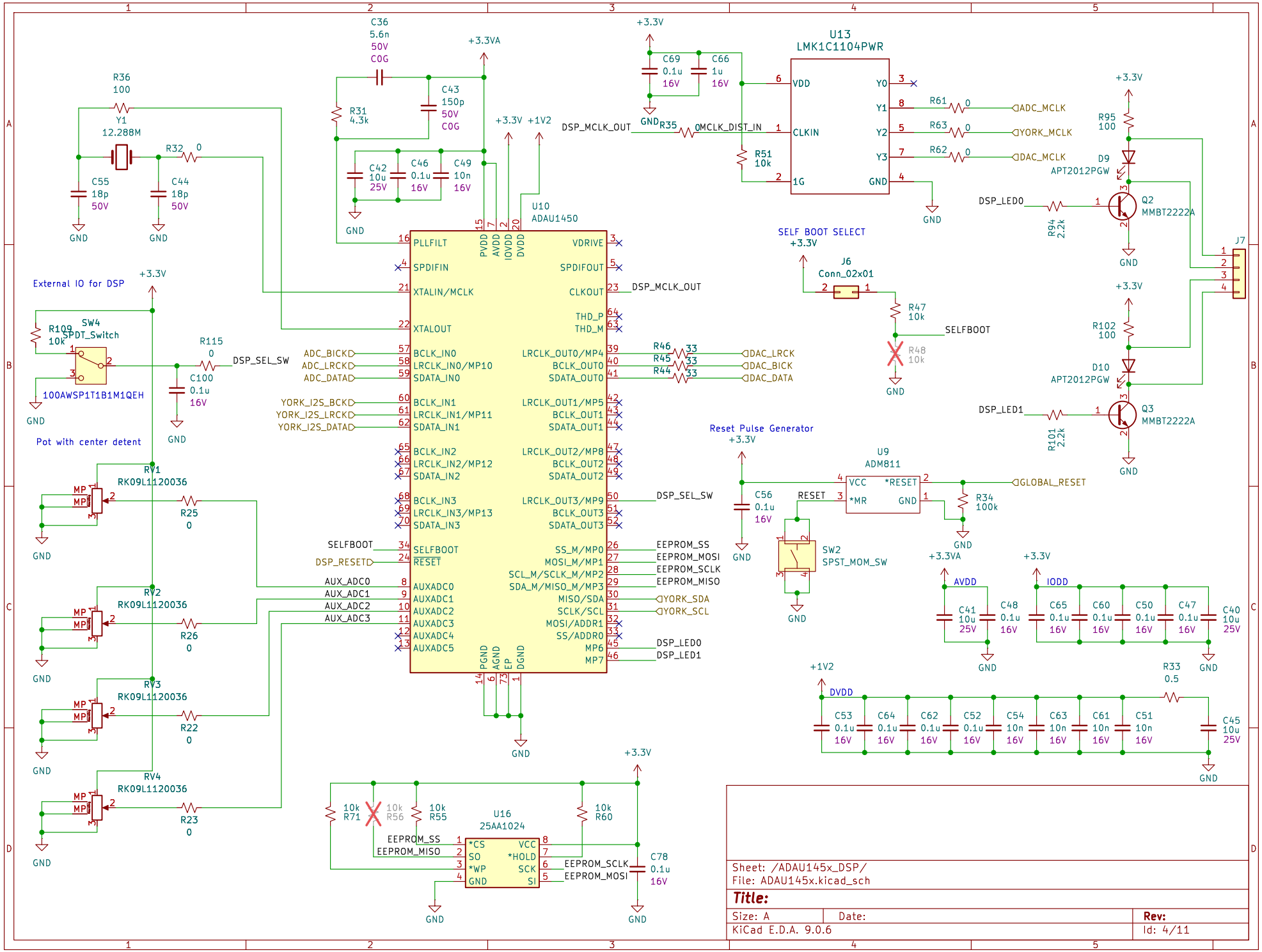


Sheet: /ADAU145x_DSP/
File: ADAU145x.kicad_sch

**Title:**

| Size: A | Date: | Rev: |
|---|---|---|
| KiCad E.D.A. 9.0.6 | | Id: 4/11 |

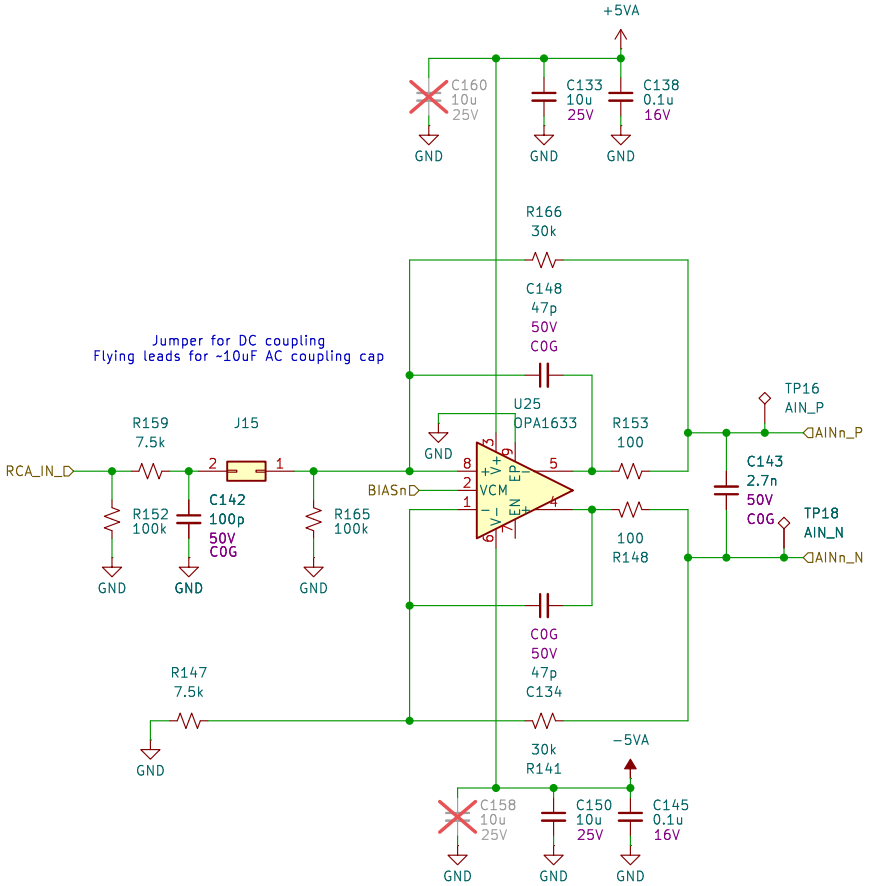


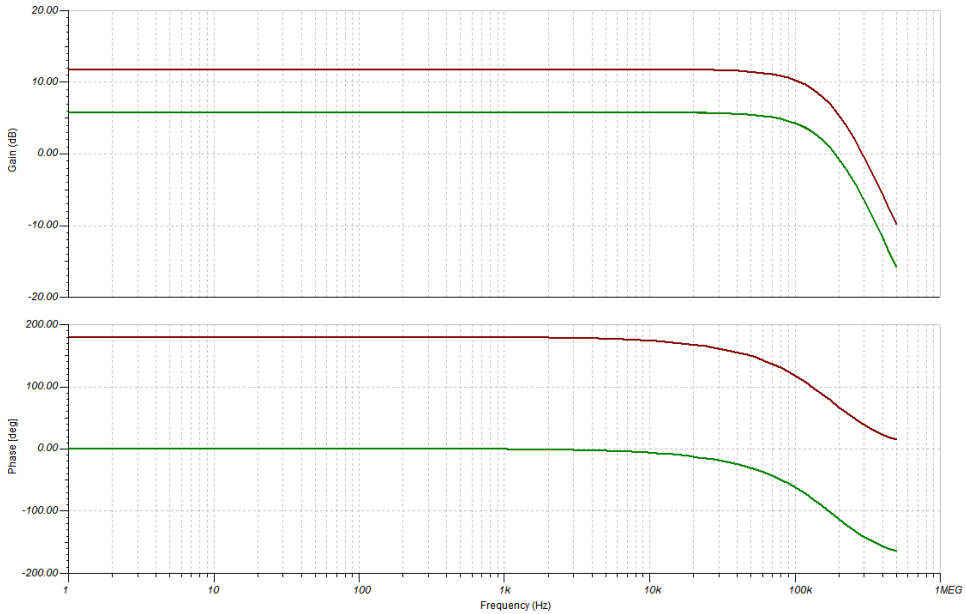


Sheet: /Analog Input/
File: Analog_Input.kicad_sch

**Title:**

| Size: A | Date: | Rev: |
|---|---|---|
| KiCad E.D.A. 9.0.6 | | Id: 5/11 |

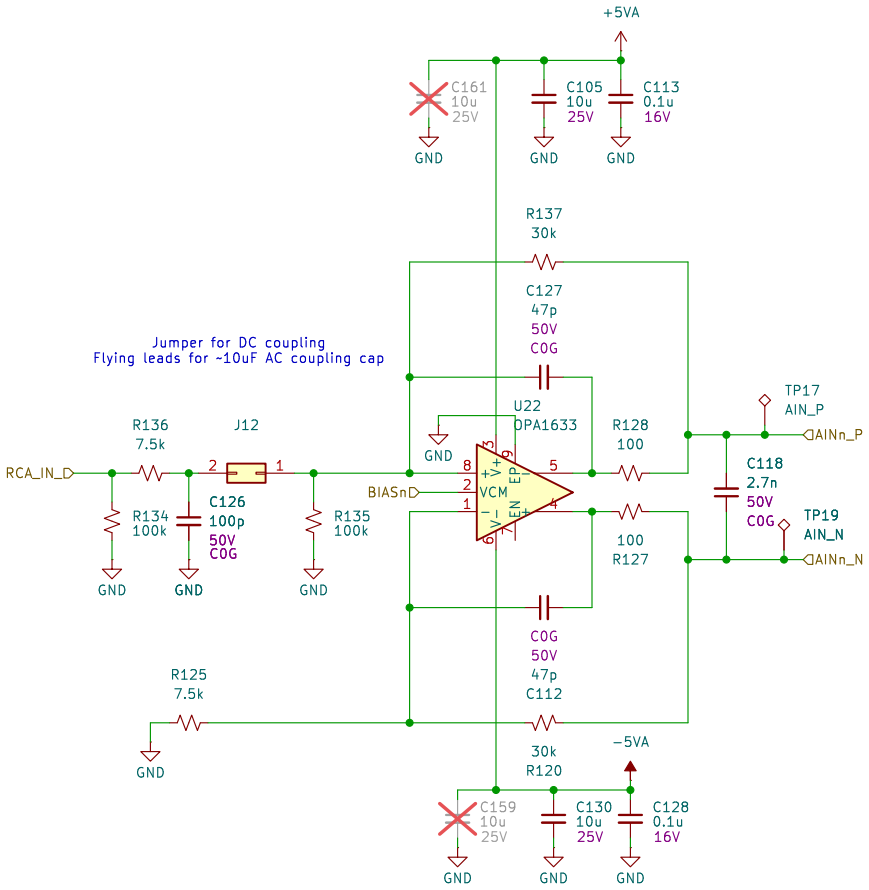


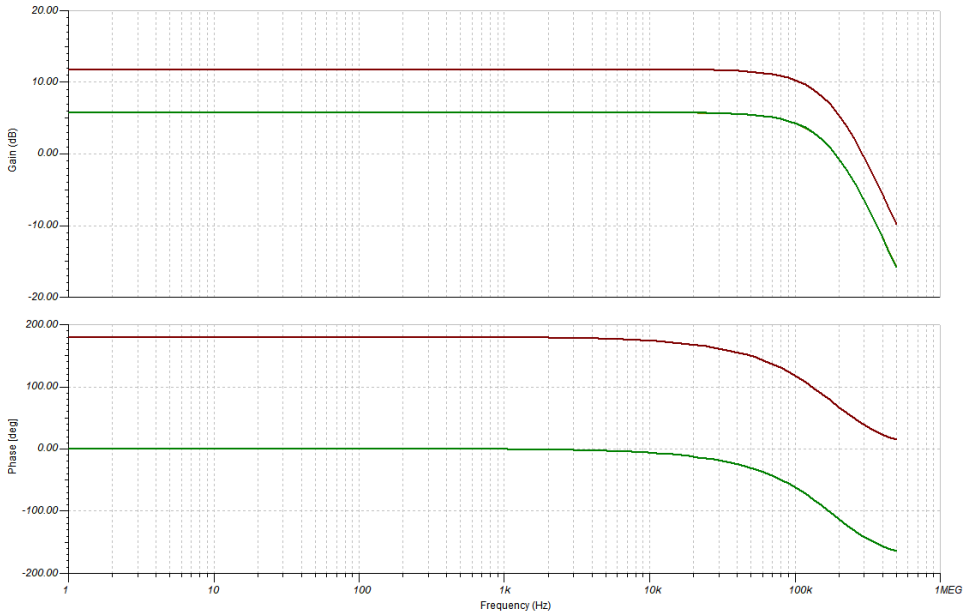


Sheet: /Analog Input1/
File: Analog_Input.kicad_sch

**Title:**

| Size: A | Date: | Rev: |
|---|---|---|
| KiCad E.D.A. 9.0.6 | | Id: 6/11 |

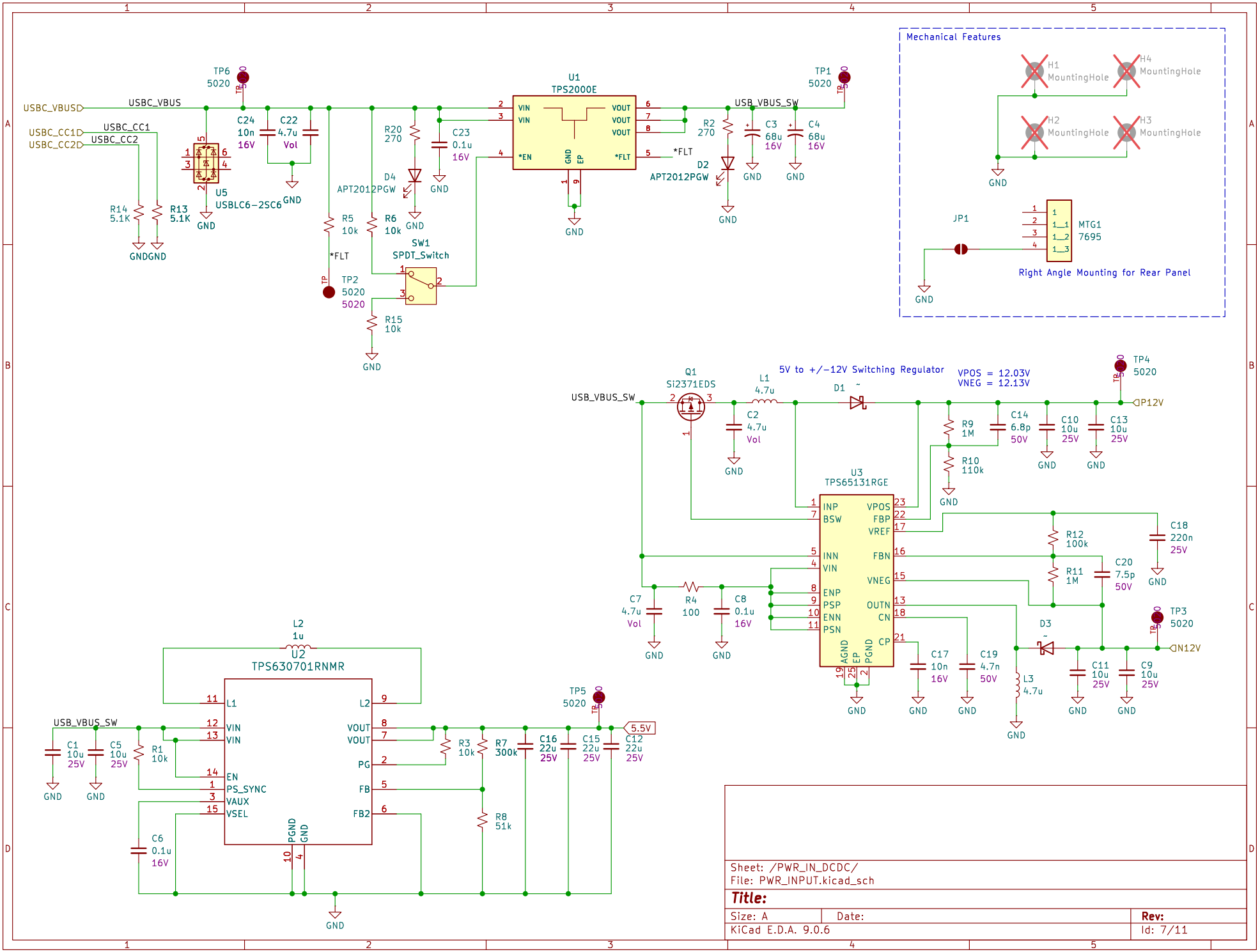
Mechanical Features
H1 MountingHole
H4 MountingHole
H2 MountingHole
H3 MountingHole
GND
JP1
MTG1 7695
Right Angle Mounting for Rear Panel
TP6 5020
USBC_VBUS
USBC_CC1
USBC_CC2
C24 10n 16V
C22 4.7u Vol
R14 5.1K
R13 5.1K
U5 USBLC6-2SC6
R20 270
D4 APT2012PGW
C23 0.1u 16V
U1 TPS2000E
VIN
*EN
GND
EP
VOUT
*FLT
R2 270
D2 APT2012PGW
USB_VBUS_SW
C3 68u 16V
C4 68u 16V
TP1 5020
R5 10k
R6 10k
SW1 SPDT_Switch
TP2 5020
R15 10k
Q1 Si2371EDS
L1 4.7u
C2 4.7u Vol
5V to +/-12V Switching Regulator
D1
VPOS = 12.03V
VNEG = 12.13V
TP4 5020
P12V
R9 1M
R10 110k
C14 6.8p 50V
C10 10u 25V
C13 10u 25V
U3 TPS65131RGE
INP
BSW
INN
VIN
ENP
PSP
ENN
PSN
AGND
PGND
VPOS
FBP
VREF
FBN
VNEG
OUTN
CN
CP
R12 100k
R11 1M
C20 7.5p 50V
C18 220n 25V
C7 4.7u Vol
R4 100
C8 0.1u 16V
C17 10n 16V
C19 4.7n 50V
D3
L3 4.7u
C11 10u 25V
C9 10u 25V
TP3 5020
N12V
L2 1u
U2 TPS630701RNMR
L1
L2
VOUT
PG
FB
FB2
EN
PS_SYNC
VAUX
VSEL
C1 10u 25V
C5 10u 25V
R1 10k
C6 0.1u 16V
R3 10k
R7 300k
R8 51k
C16 22u 25V
C15 22u 25V
C12 22u 25V
TP5 5020
5.5V
Sheet: /PWR_IN_DCDC/
File: PWR_INPUT.kicad_sch
Title:
Size: A
Date:
Rev:
KiCad E.D.A. 9.0.6
Id: 7/11

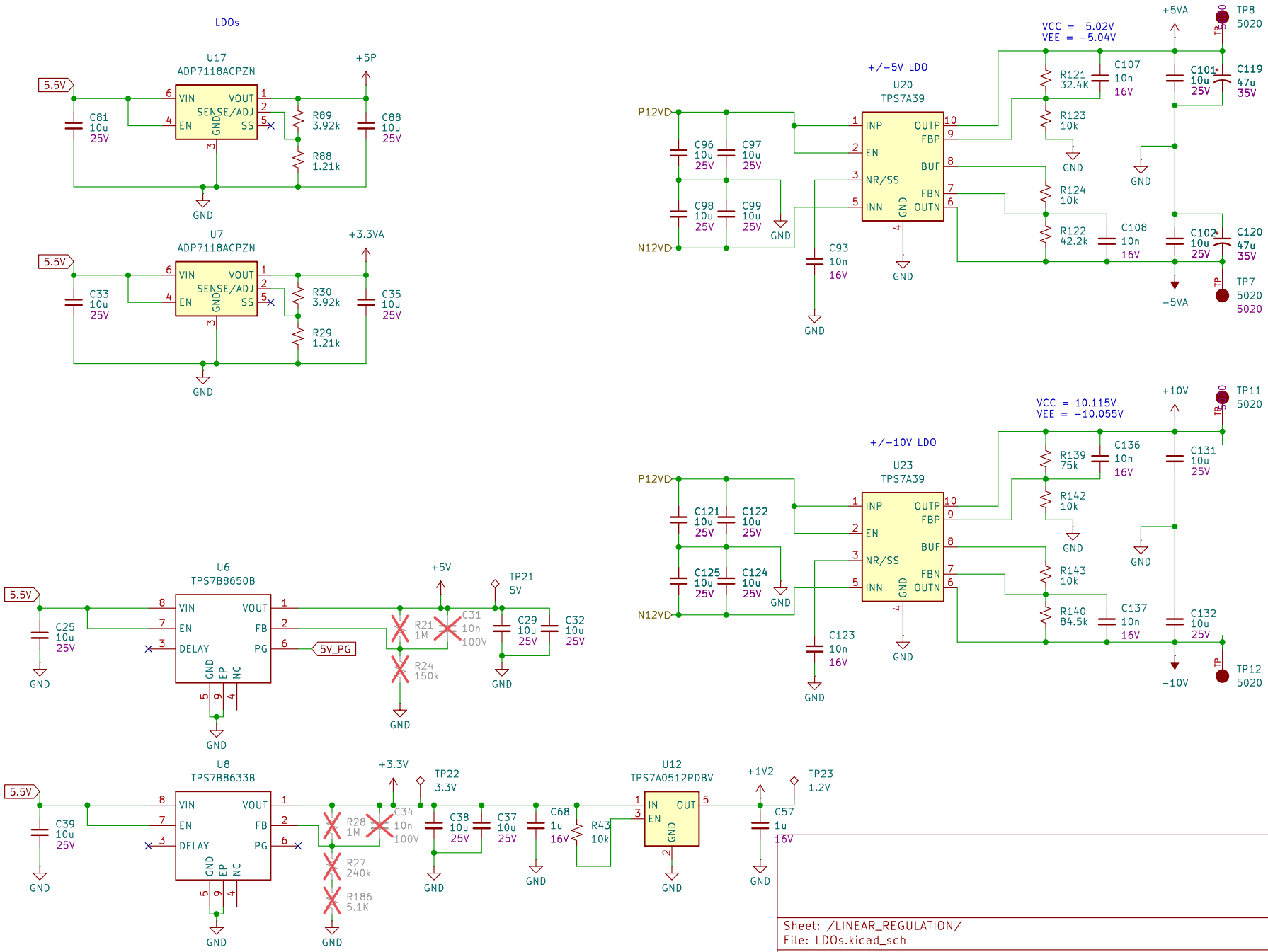


Sheet: /LINEAR_REGULATION/
File: LDOs.kicad_sch

**Title:**

| Size: A | Date: | Rev: |
|---|---|---|
| KiCad E.D.A. 9.0.6 | | Id: 8/11 |

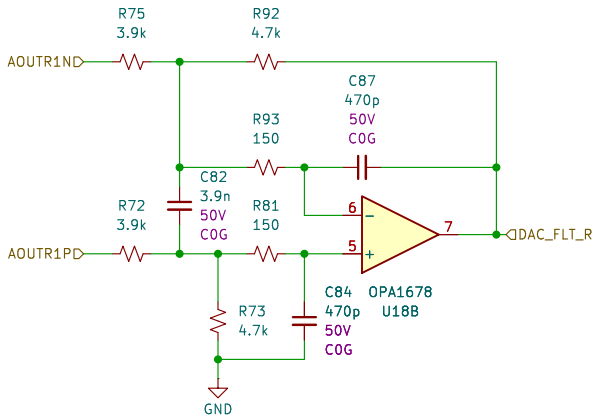


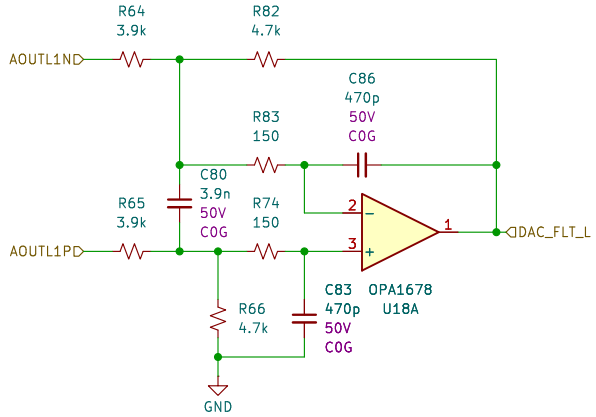


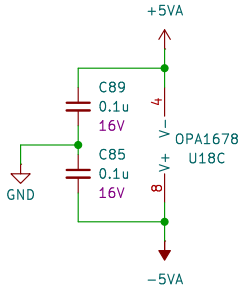


Filter from page 83 of AK4452VN datasheet

0dB cross-over frequency (Hz): 34.58k
Phase margin: 67.81 at frequency (Hz): 34.58k

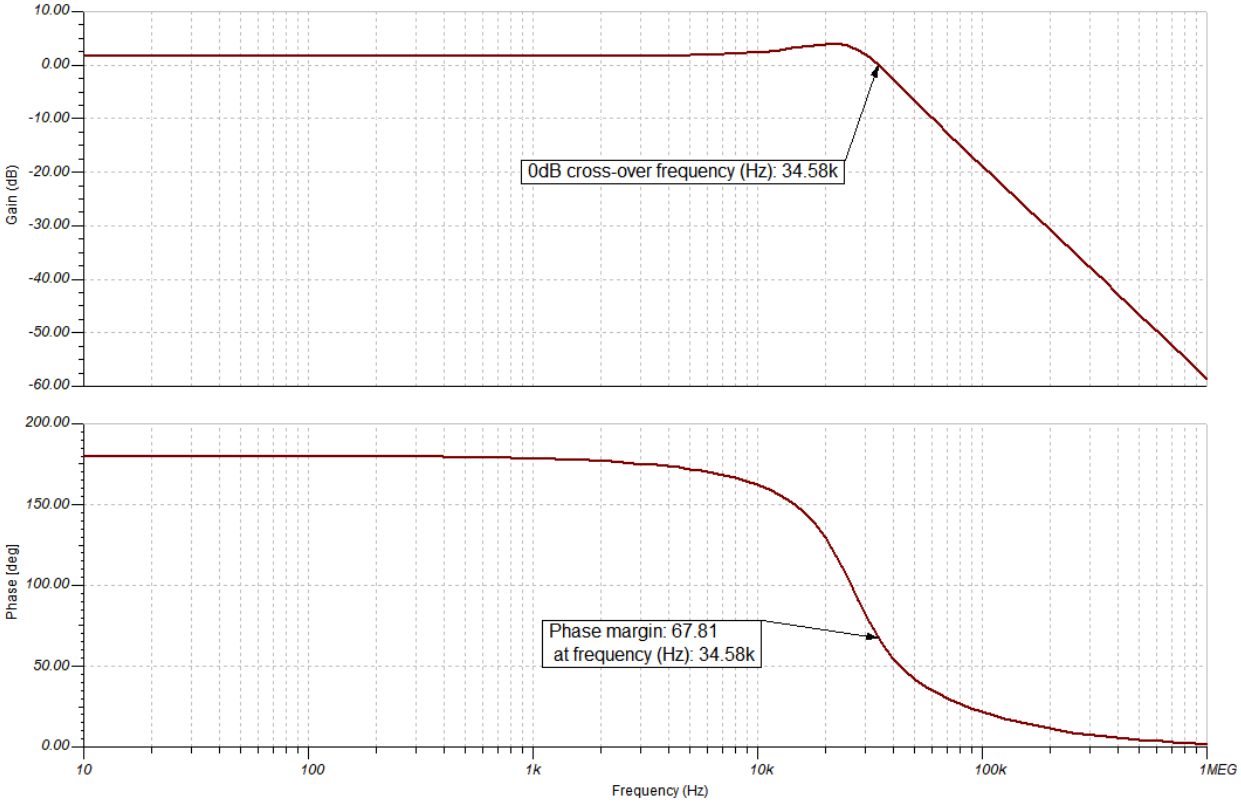


Sheet: /DAC_Output/
File: DAC_Output.kicad_sch

**Title:**

| Size: A | Date: | Rev: |
|---|---|---|
| KiCad E.D.A. 9.0.6 | | Id: 9/11 |

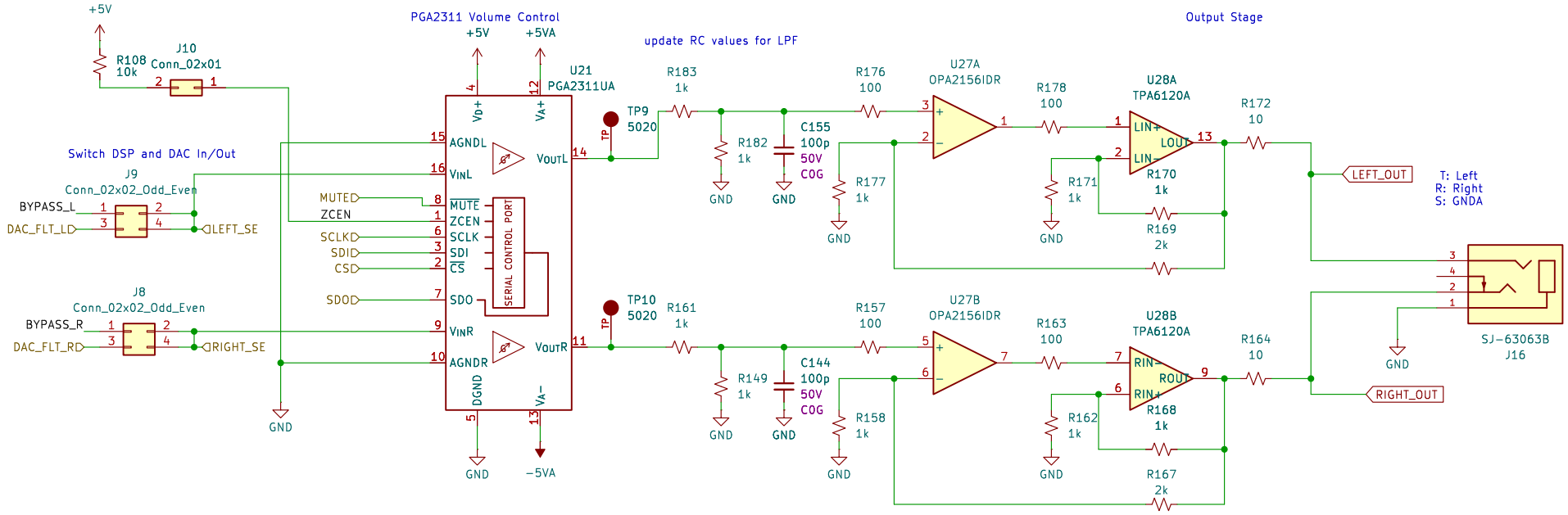


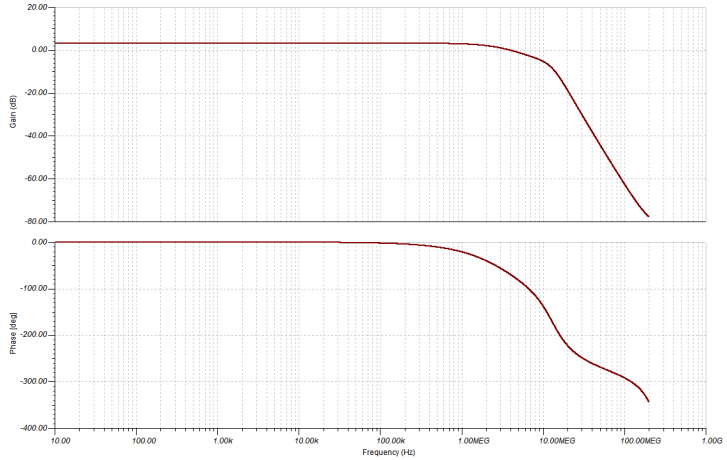


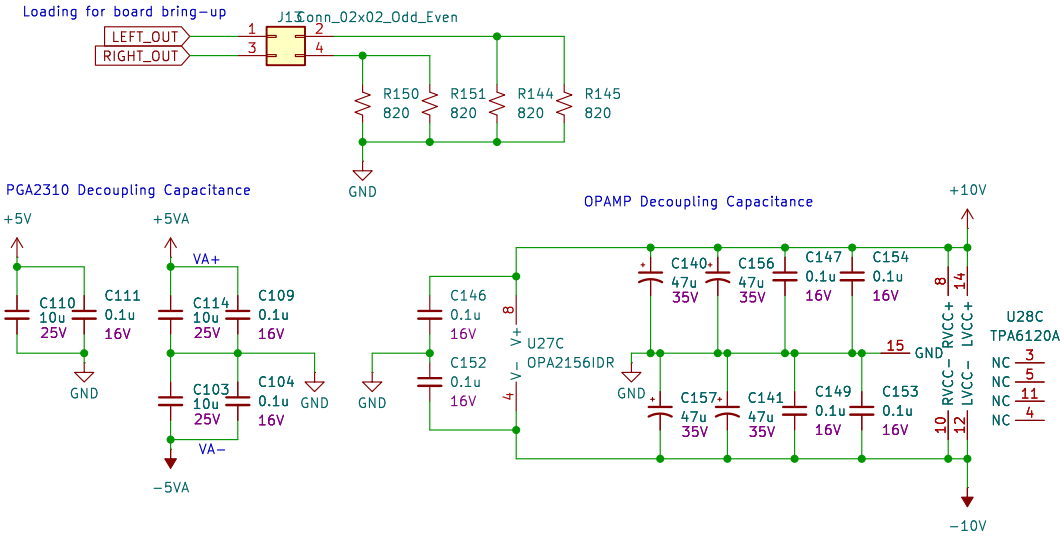


Sheet: /TPA6120A2 (AMP)/
File: TPA6120A2.kicad_sch

**Title:**

| Size: A | Date: | Rev: |
|---|---|---|
| KiCad E.D.A. 9.0.6 | | Id: 11/11 |

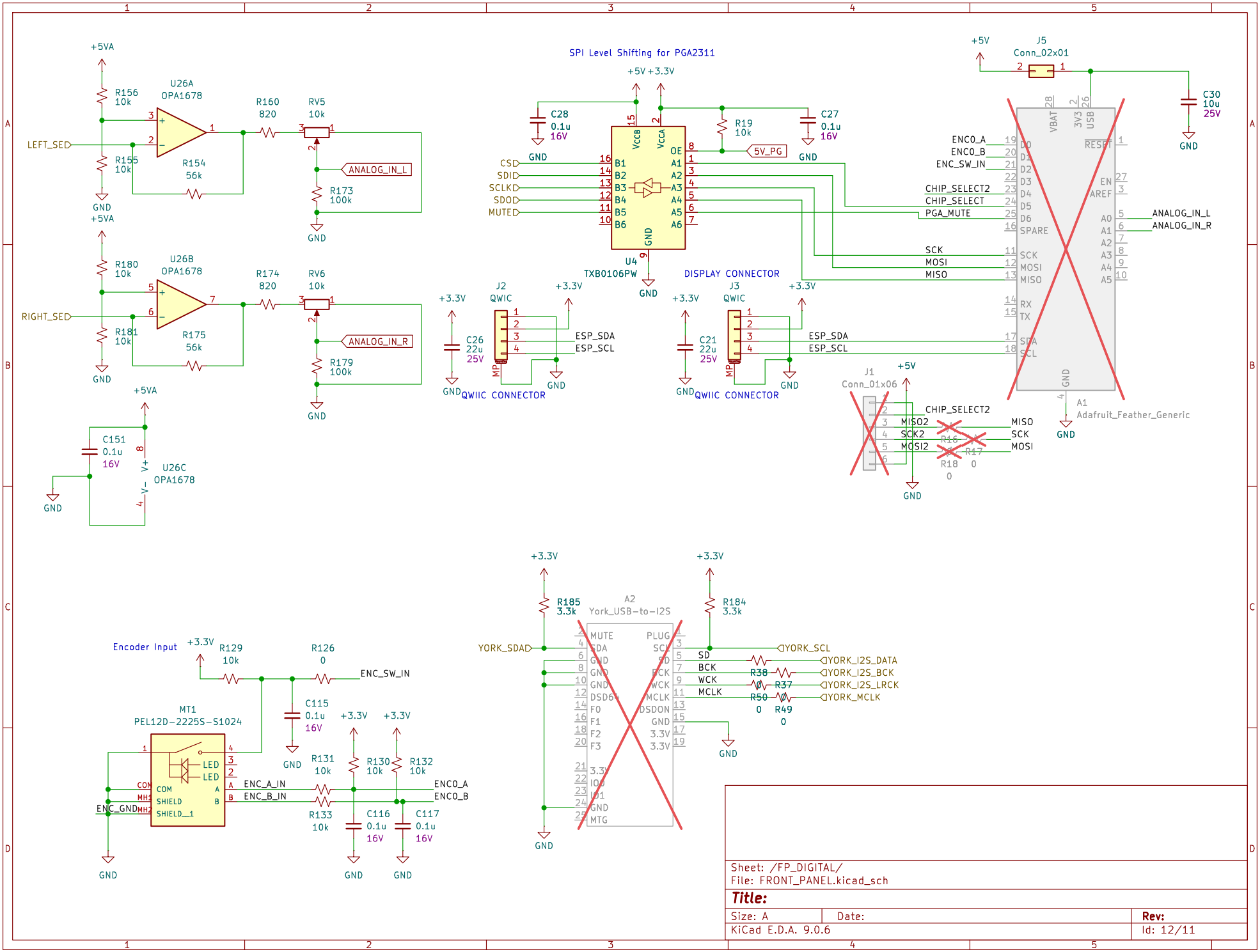
SPI Level Shifting for PGA2311
U26A OPA1678
U26B OPA1678
U26C OPA1678
LEFT_SED
RIGHT_SED
ANALOG_IN_L
ANALOG_IN_R
U4 TXB0106PW
CS
SDI
SCLK
SDO
MUTE
5V_PG
J2 QWIC
J3 QWIC
QWIIC CONNECTOR
DISPLAY CONNECTOR
ESP_SDA
ESP_SCL
J5 Conn_02x01
A1 Adafruit_Feather_Generic
ENC0_A
ENC0_B
ENC_SW_IN
CHIP_SELECT2
CHIP_SELECT
PGA_MUTE
SCK
MOSI
MISO
J1 Conn_01x06
MISO2
SCK2
MOSI2
Encoder Input
MT1 PEL12D-2225S-S1024
ENC_A_IN
ENC_B_IN
ENC_GND
A2 York_USB-to-I2S
YORK_SDA
YORK_SCL
YORK_I2S_DATA
YORK_I2S_BCK
YORK_I2S_LRCK
YORK_MCLK
Sheet: /FP_DIGITAL/
File: FRONT_PANEL.kicad_sch
Title:
Size: A
Date:
Rev:
KiCad E.D.A. 9.0.6
Id: 12/11