LEGO
STAR WARS
TM
75095
LEGO.com
Booklet available in English on:
Heft in deutscher Sprache erhältlich auf:
Livret disponible en français sur :
Folleto disponible en español en:
Folheto disponível em português em:
A füzet magyarul ezen a honlapon olvasható:
如需中文版手册，请访问 LEGO.com/starwars

About the LEGO® *Star Wars*™ Design Team

LEGO® *Star Wars* started in 1999, and we have made new models for the product line every year since then. The LEGO *Star Wars* design team consists of eight model designers and four graphic designers. The team is a mix of brand-new designers with fresh ideas, and experienced LEGO *Star Wars* designers with many models under their belts.

This is an ideal team for creating new, innovative LEGO *Star Wars* models, as well as revising and improving previous LEGO versions of classic and iconic *Star Wars* ships. The focus of our main LEGO *Star Wars* product line is to make cool, fun, and inspiring LEGO *Star Wars* models for kids.

For LEGO Direct we have the opportunity to make even bigger, more challenging models with special attention to accuracy and details. These models are fun and exciting to develop, but also a huge challenge! We always do our very best, and hope you will enjoy the building experience.

Happy building!

Jens Kronvold Frederiksen
Design Director
LEGO *Star Wars*

About the TIE Fighter™

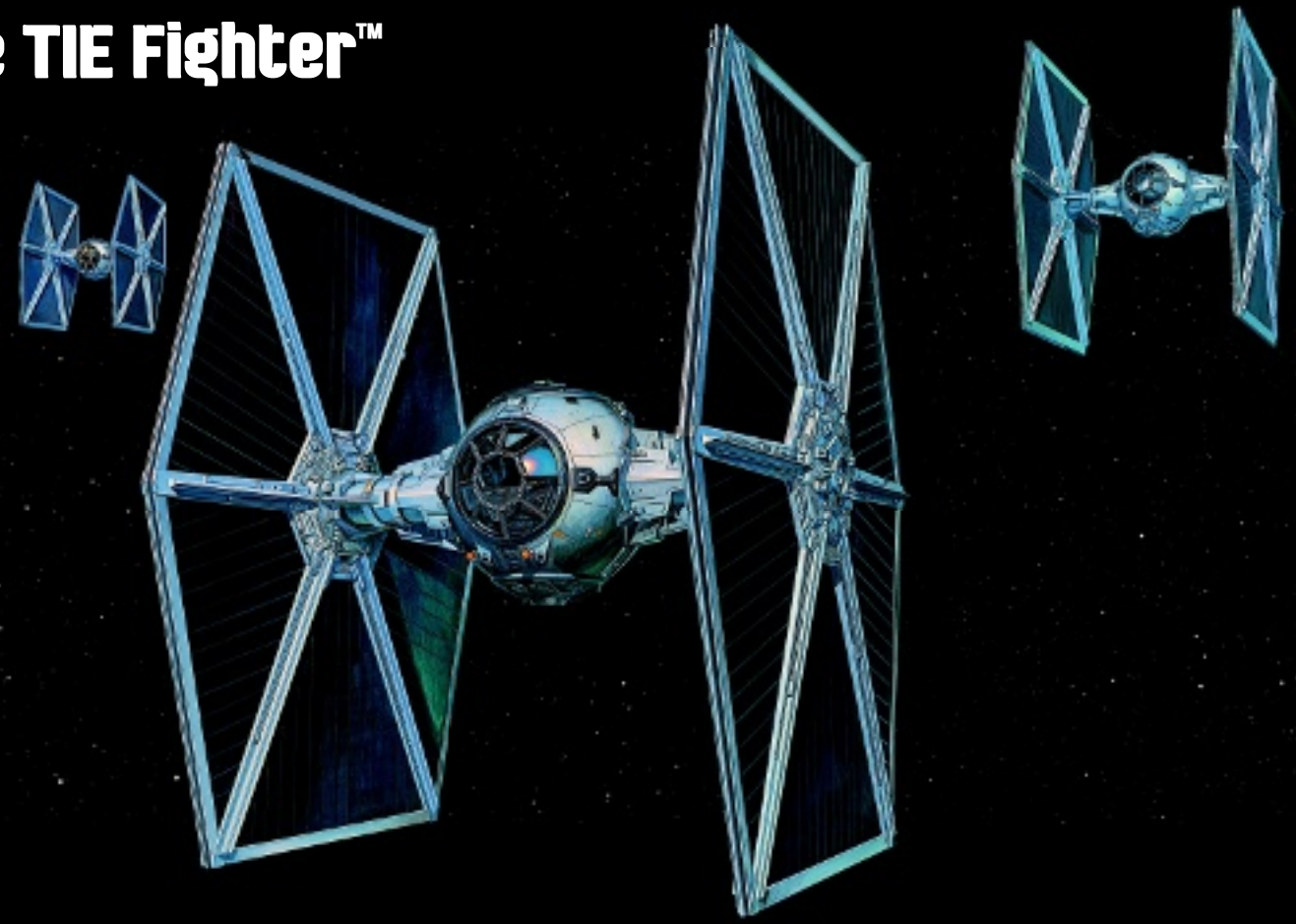

© & ™ Lucasfilm Ltd.

TIE Fighters, or Twin Ion Engine Fighters, are the Galactic Empire's first line of defence, and were often deployed by the thousands. These easily manufactured and compact starfighters were often used to overwhelm Rebel forces through sheer numbers. The Galactic Empire's standard attack squadrons each have twelve TIE Fighters, and full attack regiments are made up of six squadrons. The TIE Fighter is so widely used that many consider it a symbol of the Galactic Empire.

Although the TIE Fighter has one of the most detailed propulsion systems, it lacks combat shields, hyperdrive, and life-support systems to reduce the mass of the TIE Fighter and increase manoeuvrability. Its primary weapon was a pair of L-s1 laser cannons that were powerful despite the TIE Fighter's small size. The vehicle could be modified to hold larger weapons and larger cannons; in addition, missile tubes could be added onto the TIE Fighter. Because these fighters do not have hyperdrive or even a landing gear, they are completely dependent on carrier ships when deployed near enemies.

The Galactic Empire considers the TIE Fighters to be expendable assets, and other Imperial pilots often view TIE Fighter pilots as suicidal, considering how many TIE Fighters are destroyed in combat. In a similar fashion to Stormtroopers, TIE Fighter pilots have their own identification numbers, which further reinforces the idea that they are anonymous operatives of the Imperial military and that they themselves, like the TIE Fighters, are expendable assets.

The front section of the TIE Fighter is compact to make it difficult to hit with blasters. The side panels are wide targets for flanking enemy pilots; they also make it difficult to manoeuvre while in the atmosphere. Because TIE Fighters are easy to pilot and indistinguishable from each other, captured TIE Fighters are sometimes used by Rebel forces to infiltrate Imperial ranks.

With thousands at its disposal, the Imperial military continues to rely on TIE Fighters as a valuable weapon and tool when in combat against the Rebel Alliance.

© & ™ Lucasfilm Ltd.

TIE Fighter™ Facts

Manufacturer.....Sienar Fleet Systems
Model.....Twin Ion Engine/Ln Starfighter
Class.....Starfighter

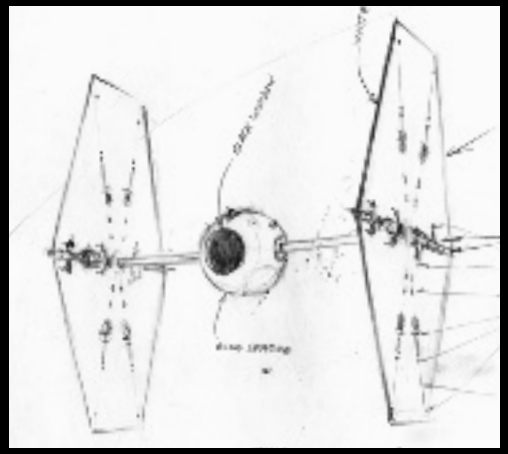

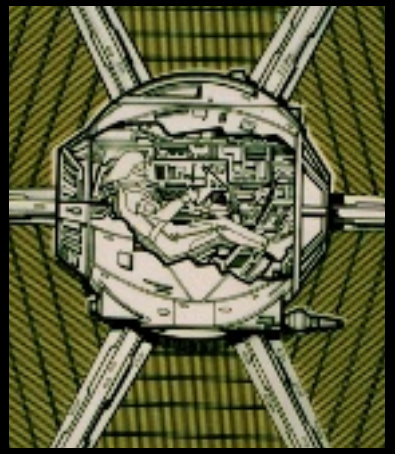

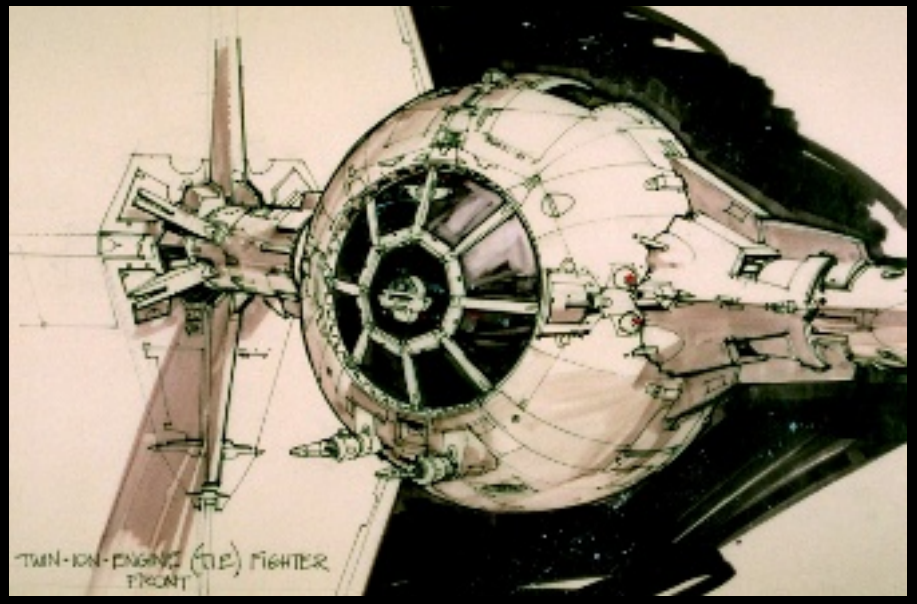

© & ™ Lucasfilm Ltd.

Visual Effects Artist © & ™ Lucasfilm Ltd.

Technical Specifications

Length.....8.99m (29.5 ft)
Maximum speed.....4,100 G
Maximum speed (atmosphere).....745 mph (1,200 km/h)
Engine Unit(s).....SFS P-s4 Twin Ion Engines
SFS P-w401 Ion Manoeuvring Jets
SFS I-a2b Solar Ionization Reactor
Crew.....1 pilot
Targeting Systems.....SFS T-s8 targeting computer
Armament.....SFS L-s1 laser cannons
Cargo capacity.....65kg (143.3 lbs)

Meet the Model Designer

Olav Krøigaard

Q: How long have you been a LEGO® *Star Wars* model designer?

A: I started in September 1987 as a LEGO Technic designer. After 12 years I changed to LEGO System and designed LEGO Sports, CREATOR, Batman, Spider-Man and other LEGO licensed lines. During my time as a designer on the other lines, I was already very interested in becoming a LEGO *Star Wars* designer. I have now been a *Star Wars* designer for 9 years, and during that time I have taken part in different fairs/events including LEGO World, *Star Wars* days in LEGOLAND®, and LEGO Inside Tour. It's a great opportunity to meet all kinds of LEGO *Star Wars* fans.

Q: How was designing the TIE Fighter different from your work on other LEGO *Star Wars* models?

A: One of the significant differences in designing the TIE Fighter from other LEGO *Star Wars* models is the fix point of the wings, as this is a new and special way to lock the heavy wings. I hope fans will enjoy the secret way to build this part because it has never been seen before.

Q: The TIE Fighter is a unique and iconic vehicle from the *Star Wars* universe. How did you begin designing the signature shape, and how did you ensure the set would hold together?

A: I think the most challenging thing was to construct the inside of the model, and it was very difficult to make it stable without using Technic elements. So in order to overcome the stability issue I had to use octagon-shaped plates. Besides

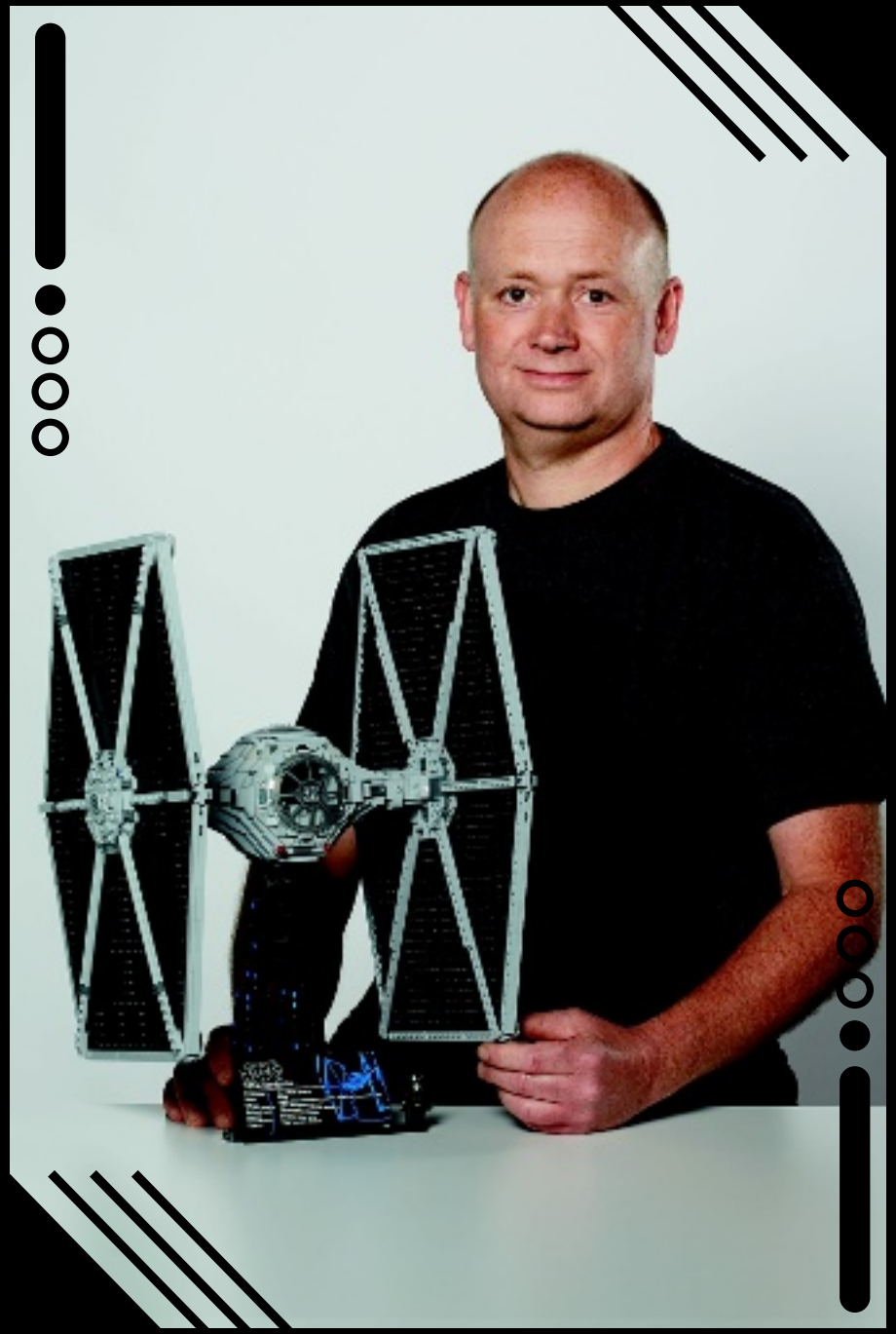

Model Designer Olav Krøigaard

that, making the wings and fixing the angles so it has the iconic six-shaped angle were also tough. The wings have special elements as these are made of solar panels.

Q: How did you integrate the opening cockpit function into the set?

A: As the TIE Fighter is very iconic I have to stay true to the shape of the model, and in order to do that I used the parabolic element as a hatch.

Q: How did you plan the design for the TIE Fighter? Did you use artist sketches or film stills to inspire your creation of the model?

A: Designing the TIE Fighter I used both pictures and sketches as well as the movie in order to catch the right size, proportion, and the details. I built the model several times in different ways, comparing it to my references until I got it right. We also reviewed the model each week with the design team, as well as sparring with each other all the way through the design process.

Q: Is there a specific feature of the TIE Fighter set that you like best?

A: One of the specific features that I like best is the stand, as it allows you to display the model from all sides. I also like the cockpit glass as it fits perfectly to the model. The minifigure included in the set is a great collectable item with unique decorations. But in general there are so many features that I like very much.

Q: There have been several TIE Fighter LEGO® sets in the past. What sets this one apart?

A: The way that it has been built and the size of it is tremendous. Also, the level of detail is unique to this set. Besides that, it has the display stand with all the specifications of the vehicle from the movie, on a plaque.

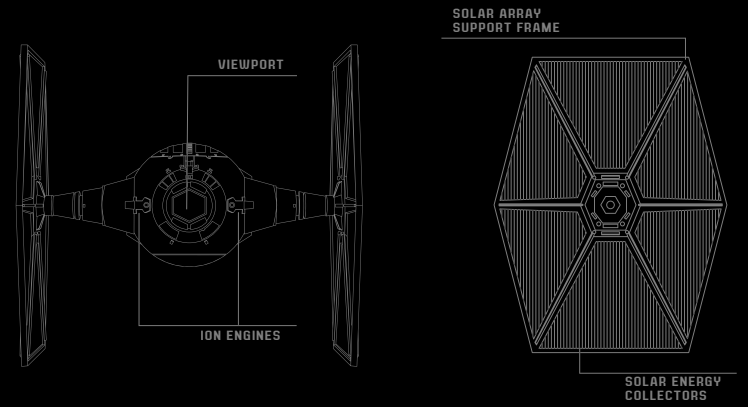

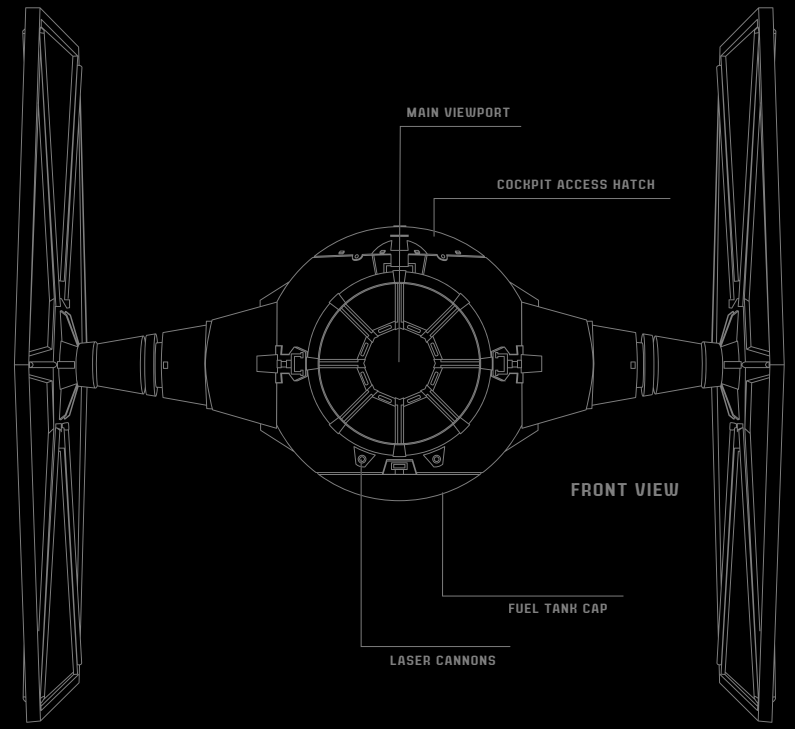

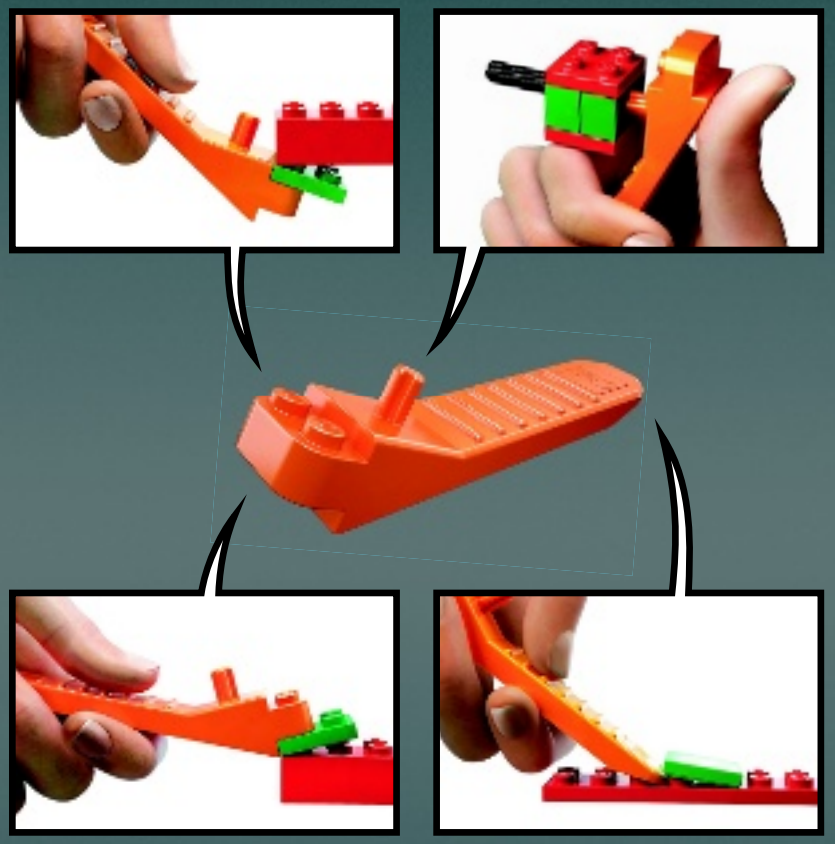

LEGO.com/brickseparator

FSC
www.fsc.org
MIX
Paper from responsible sources
FSC™ C117818

1

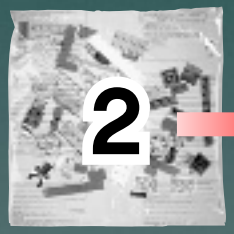
2

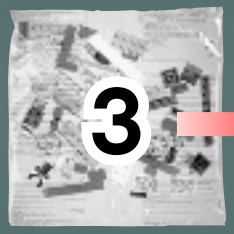
3

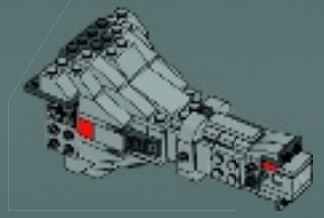

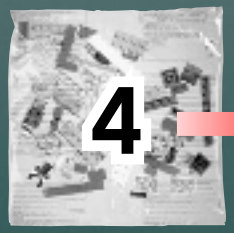
4

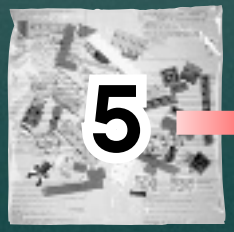
5

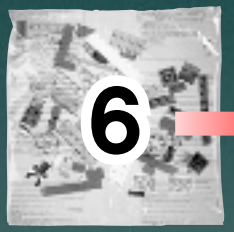
6

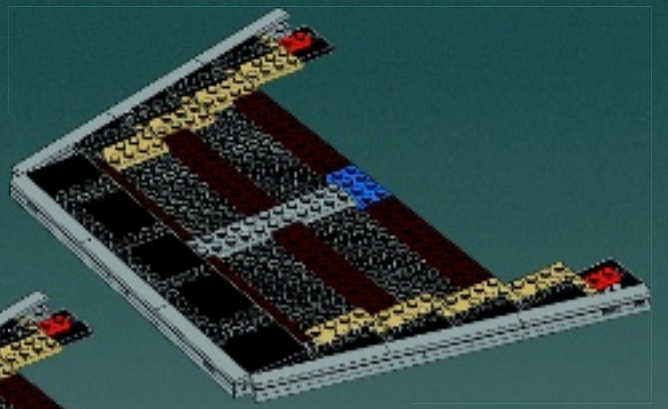

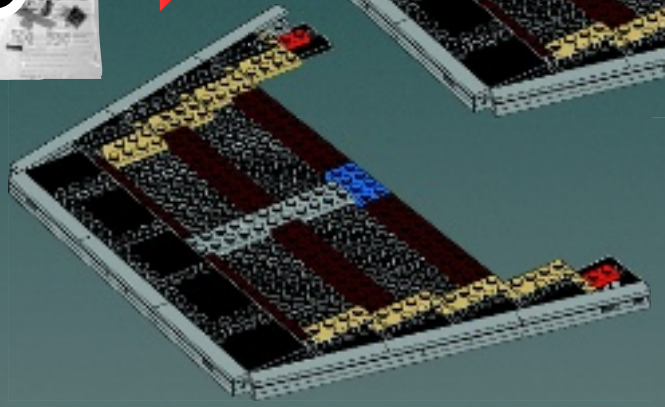

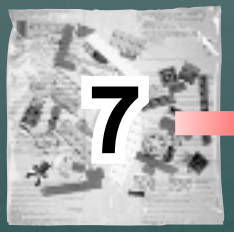
7

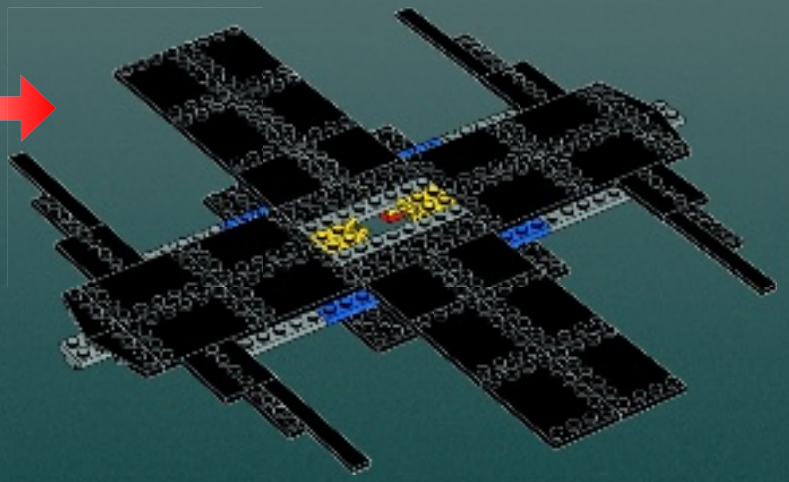

8

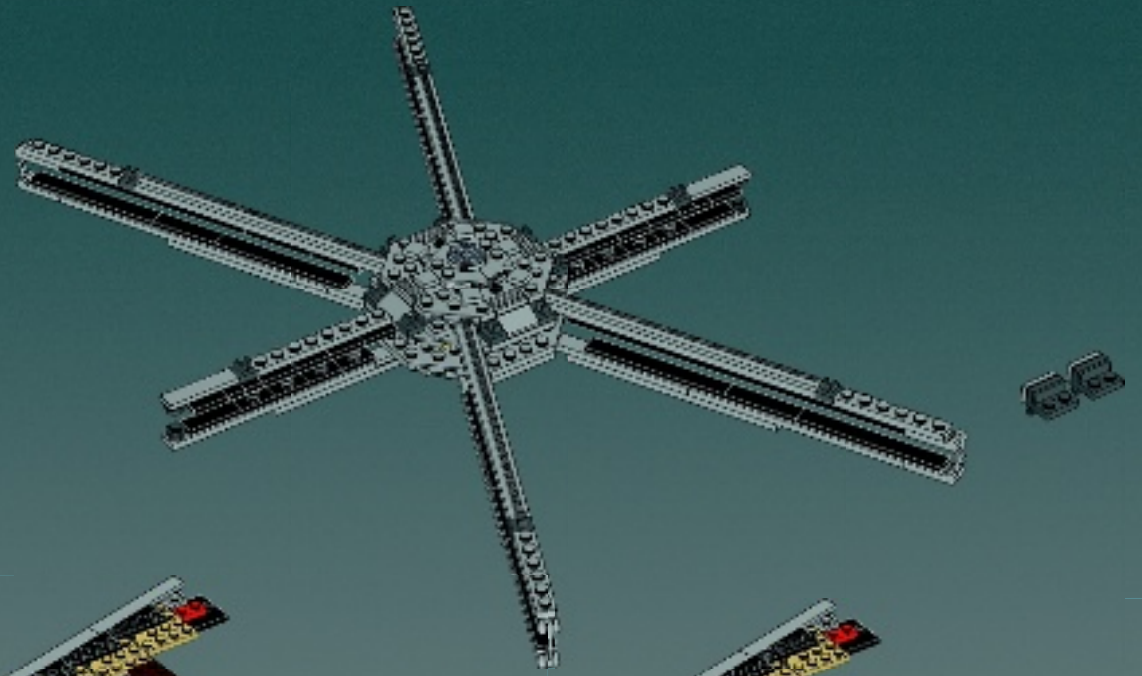

9

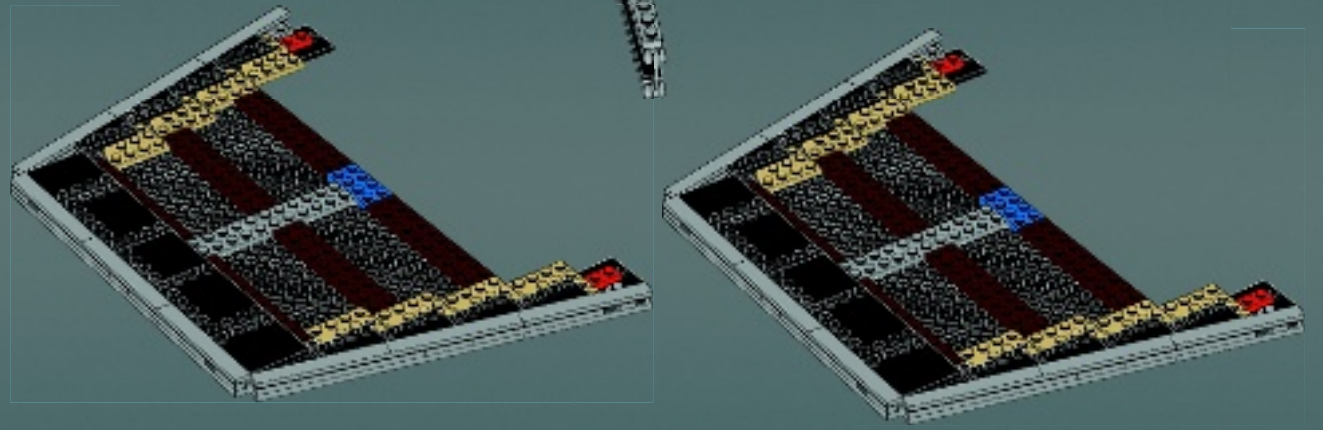

10

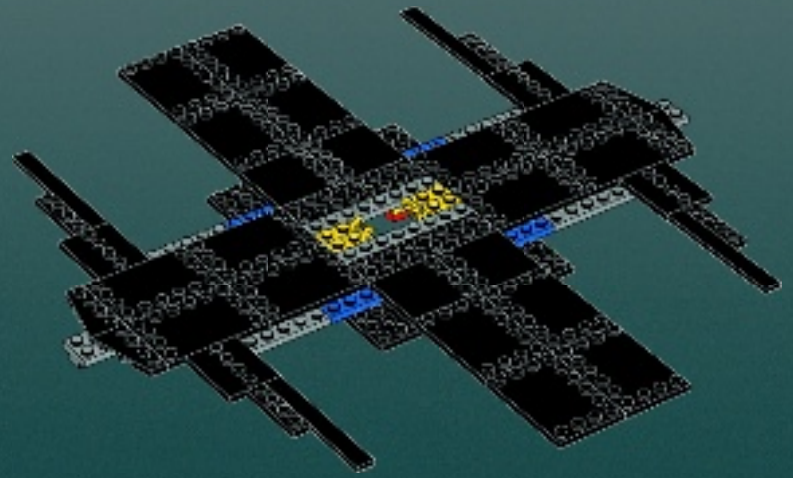

11

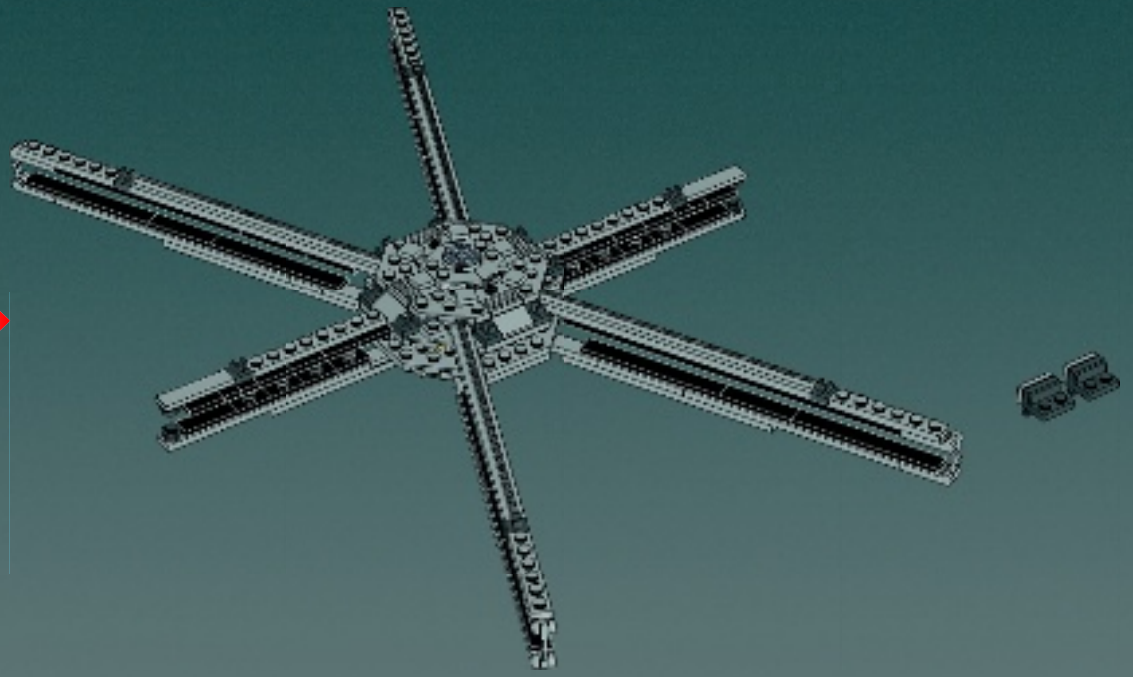

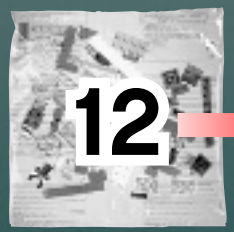
12

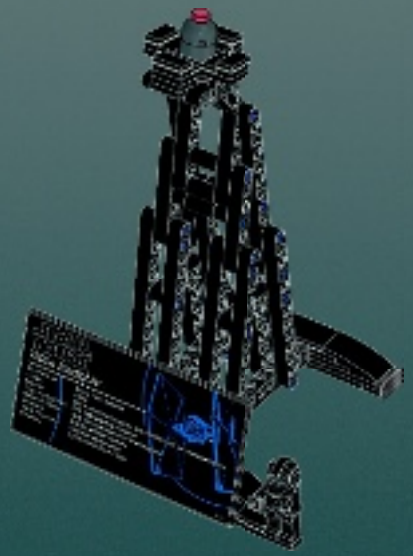

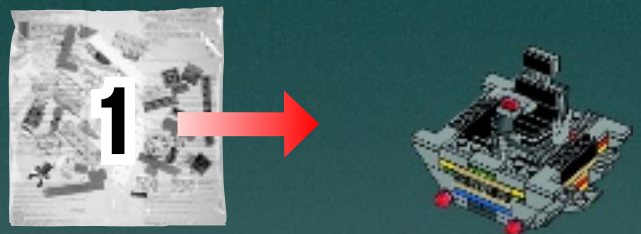

1x

1

2x

2

2x

3

4

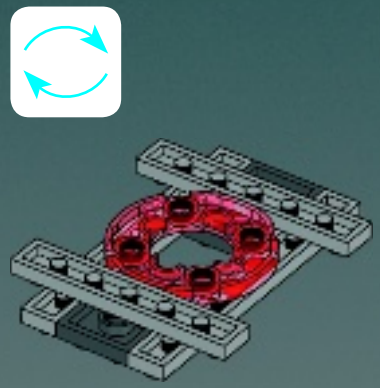

5

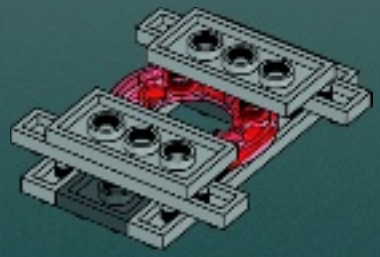

6

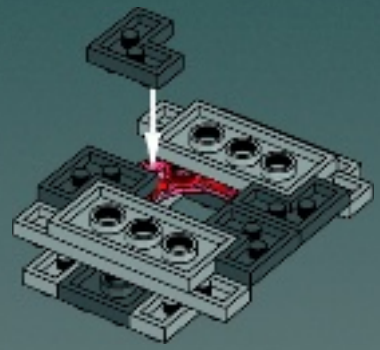

7

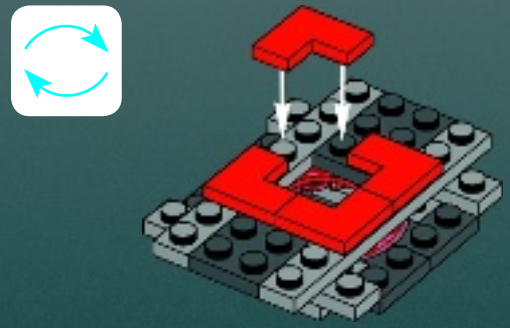

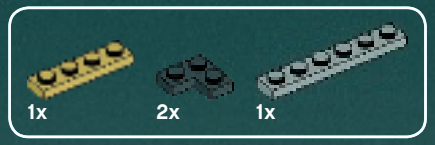

8

9

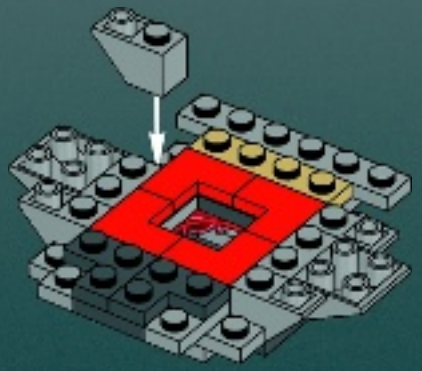

10

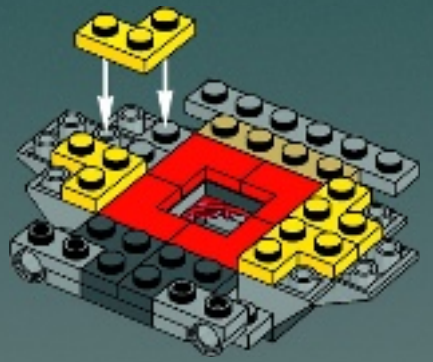

11

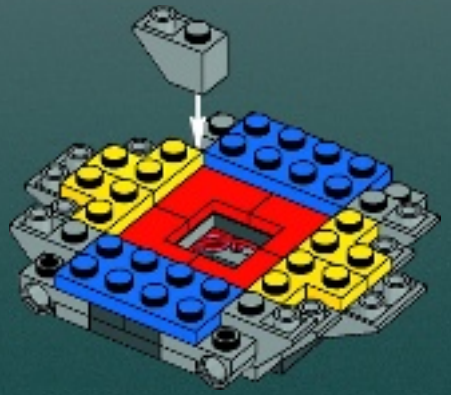

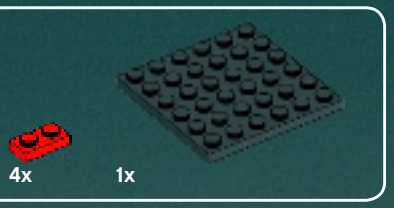

12

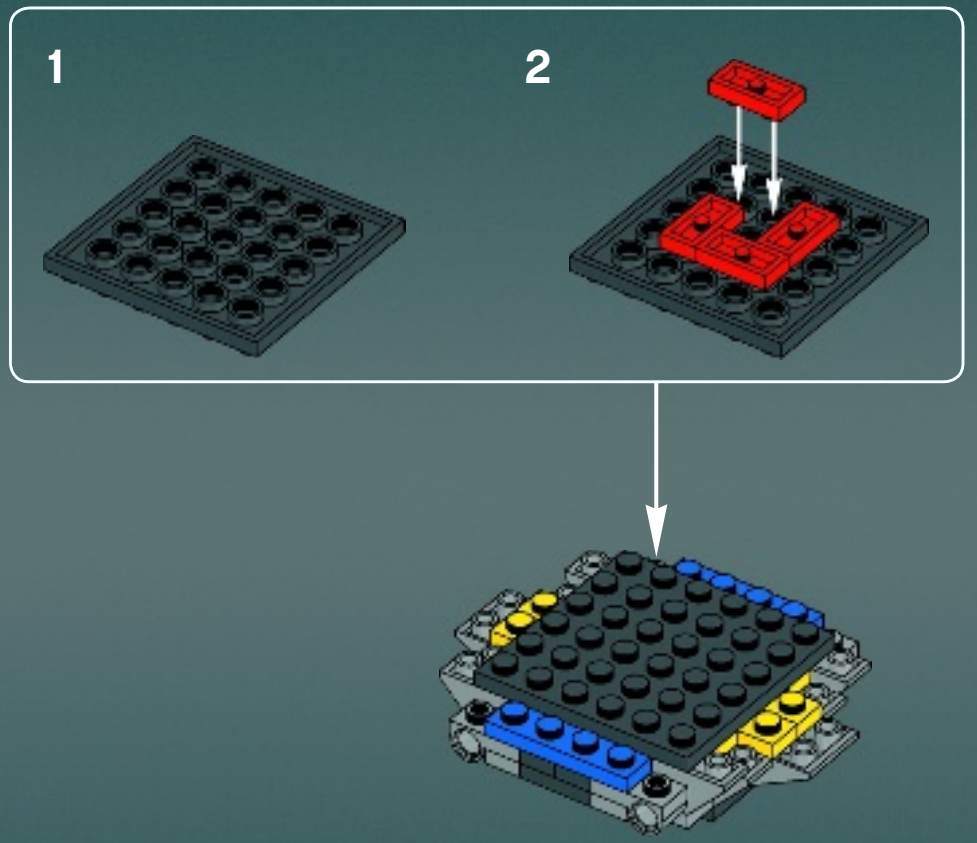

13

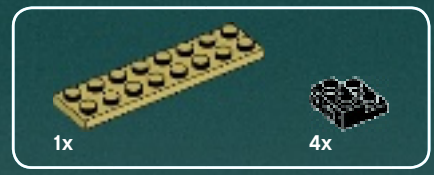

14

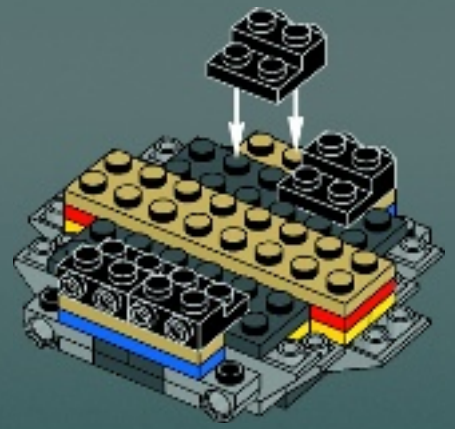

15

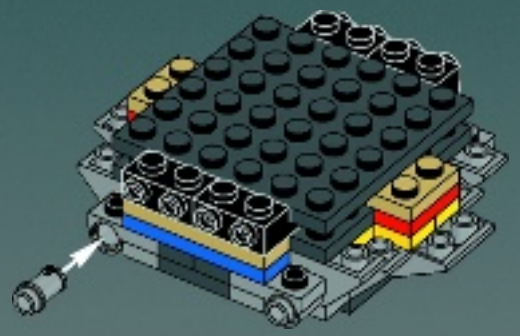

16

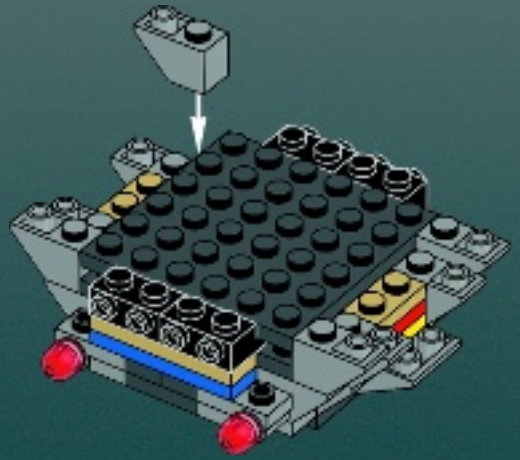

17

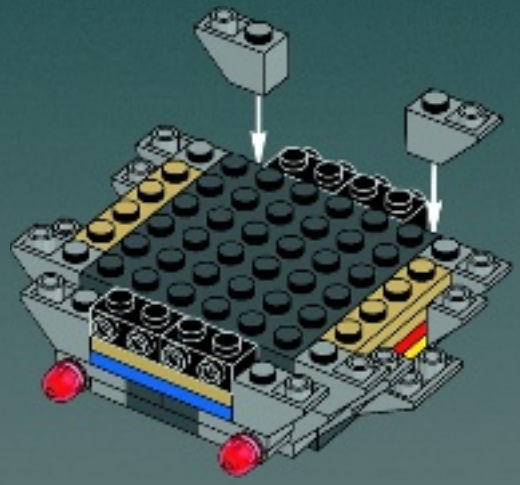

18

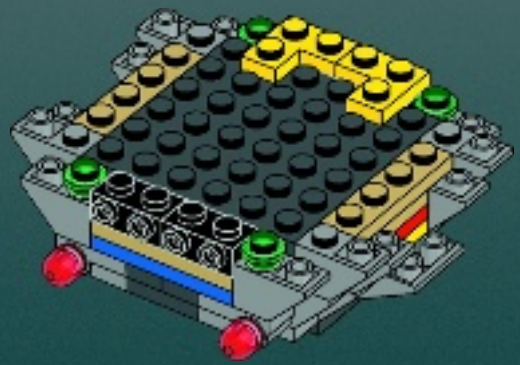

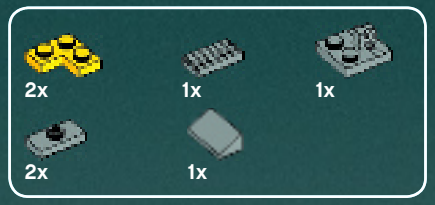

19

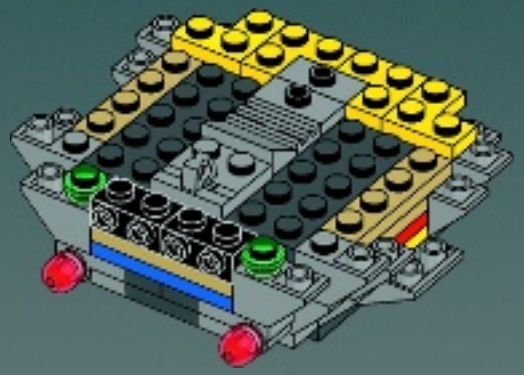

20

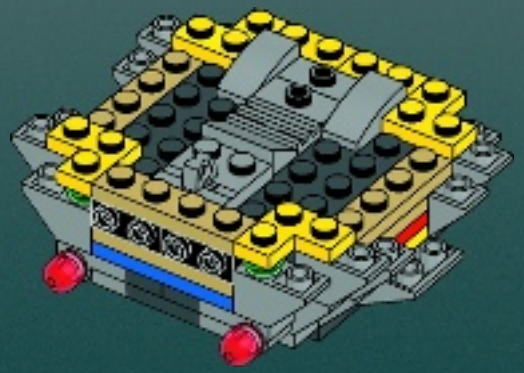

21

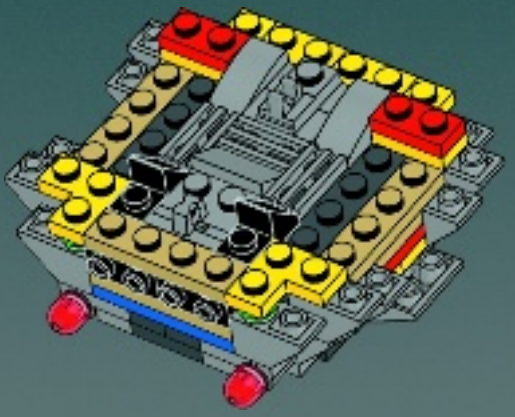

22

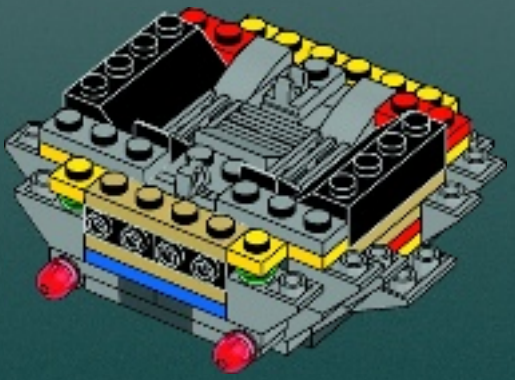

23

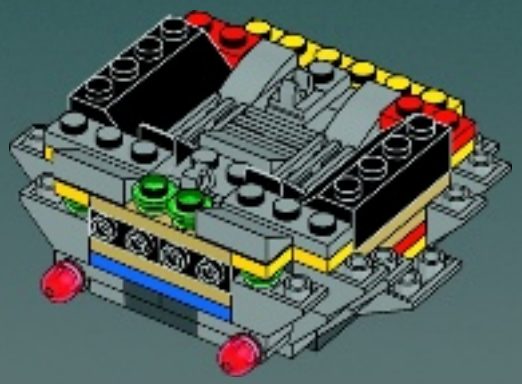

24

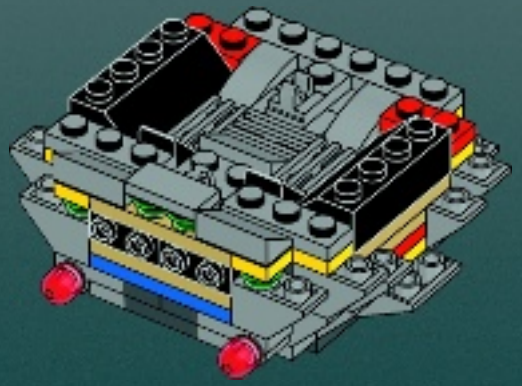

25

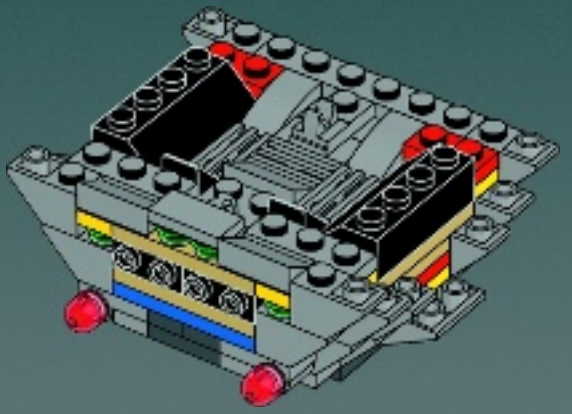

26

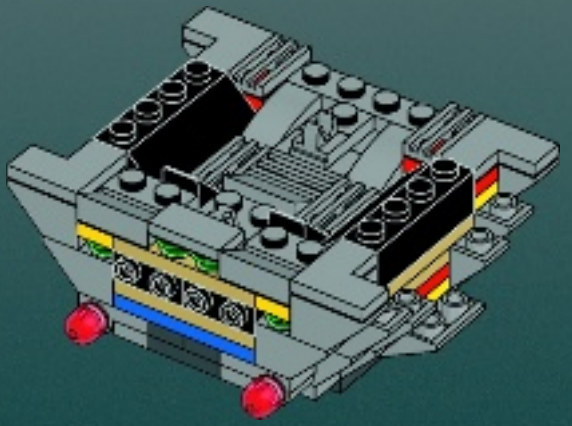

1

2

3

4

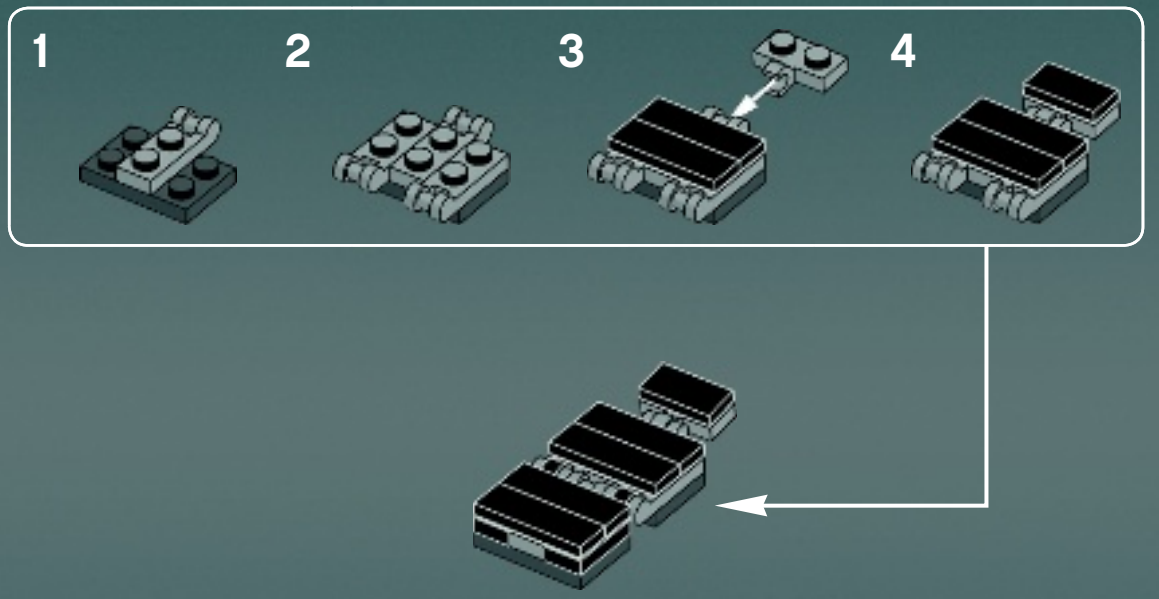

5

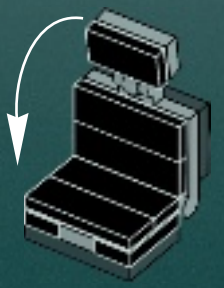

27

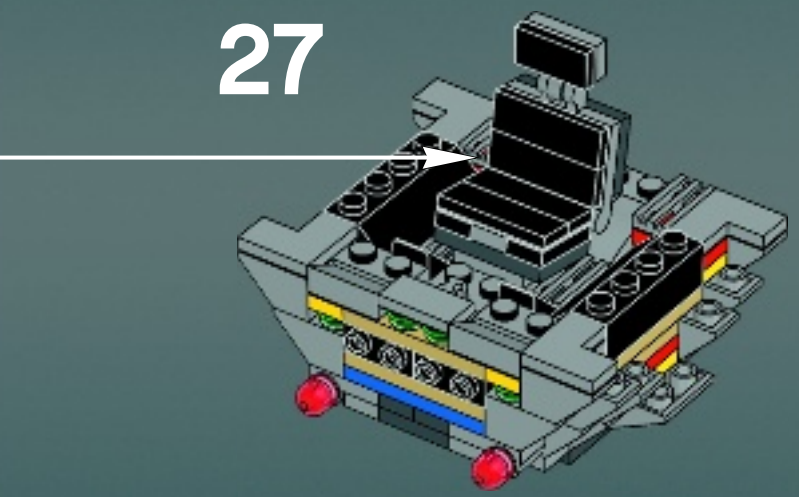

28

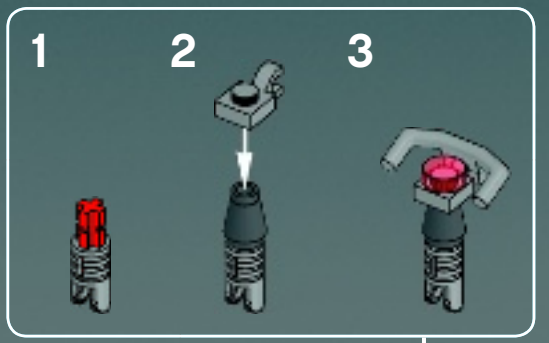

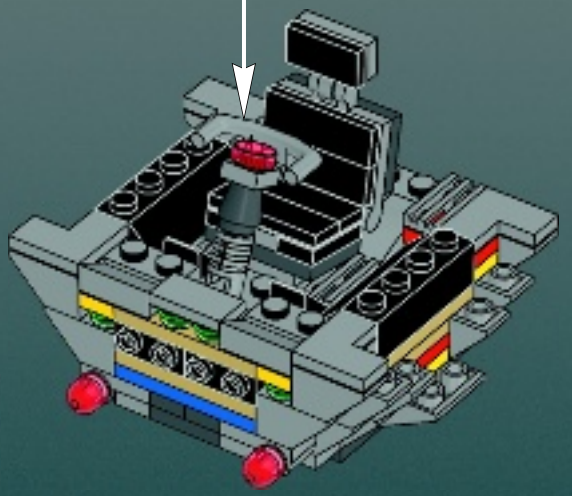

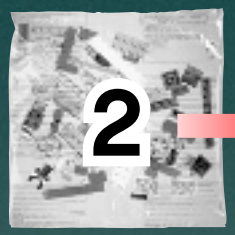

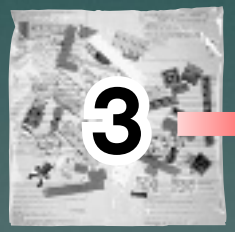

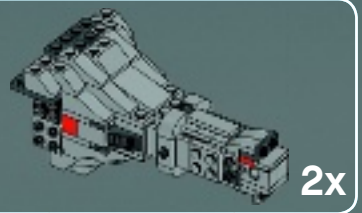

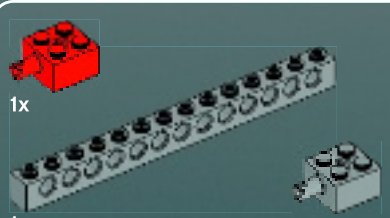

1

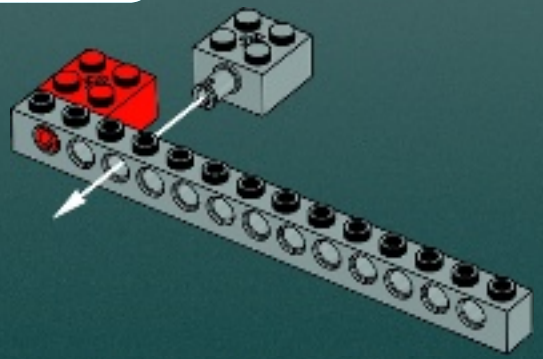

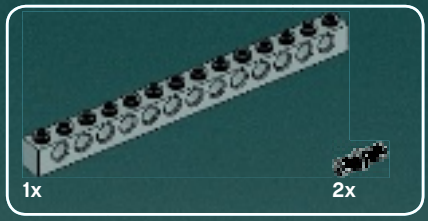

2

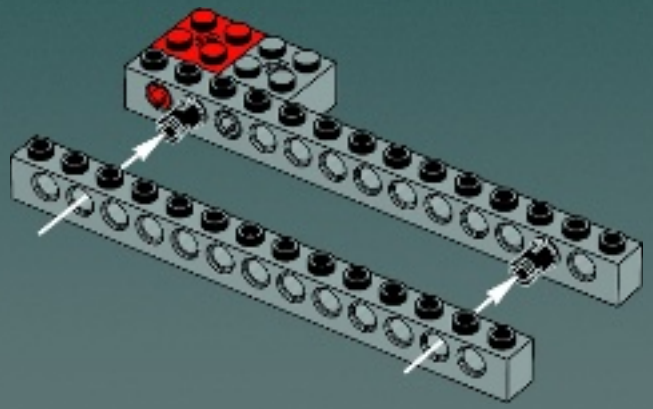

3

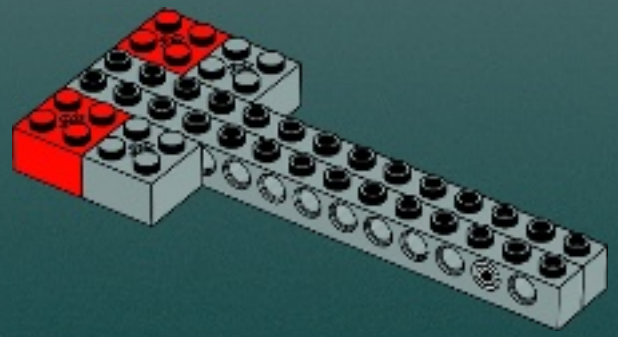

4

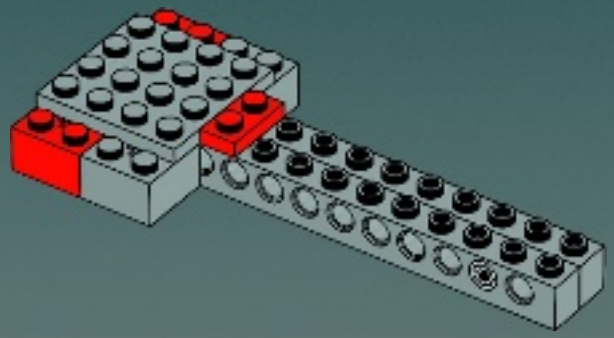

5

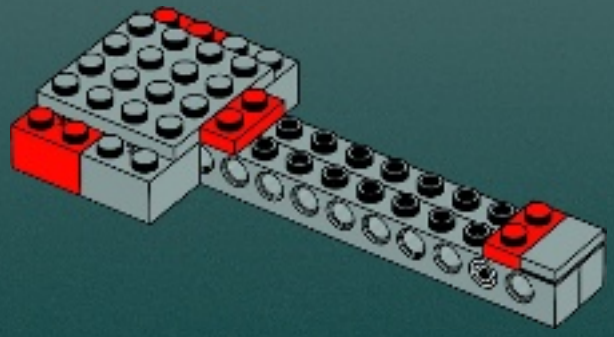

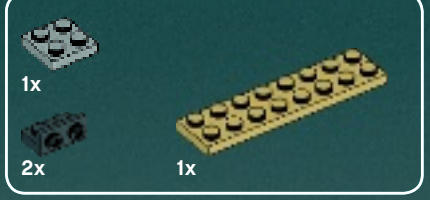

6

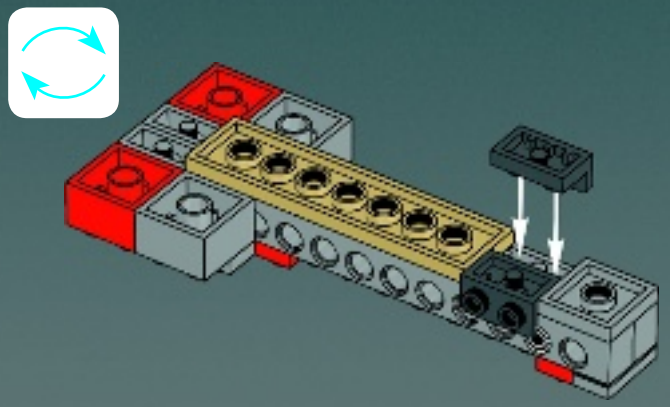

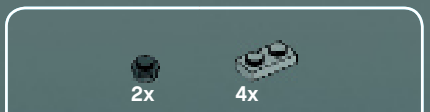

7

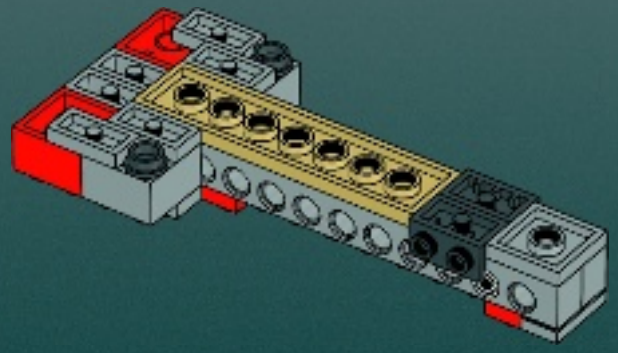

8

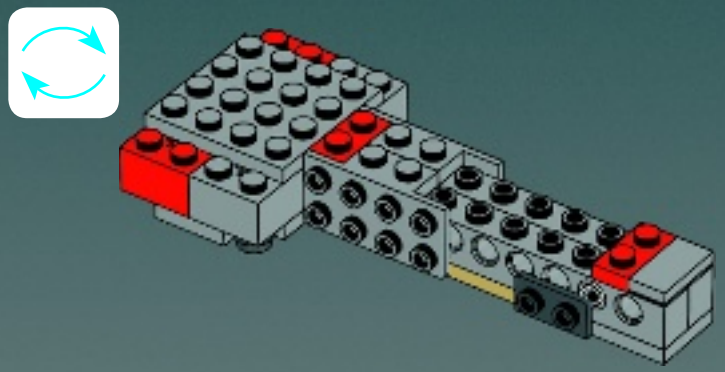

9

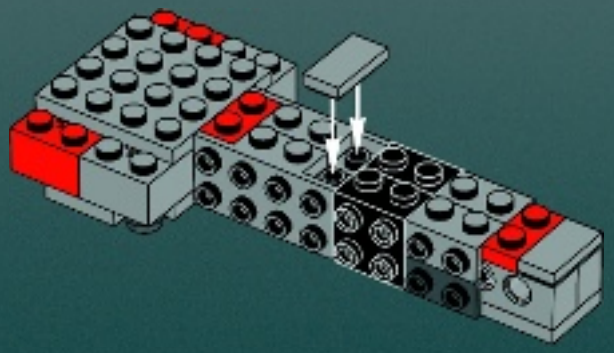

10

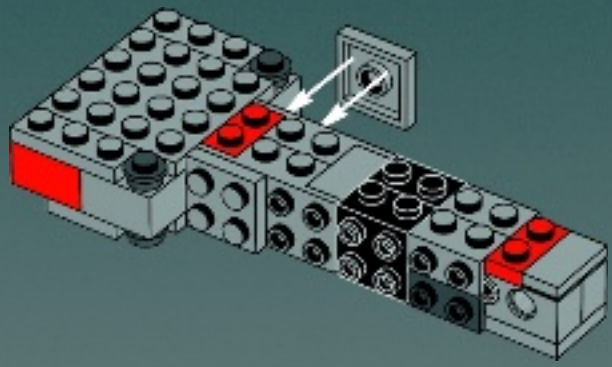

11

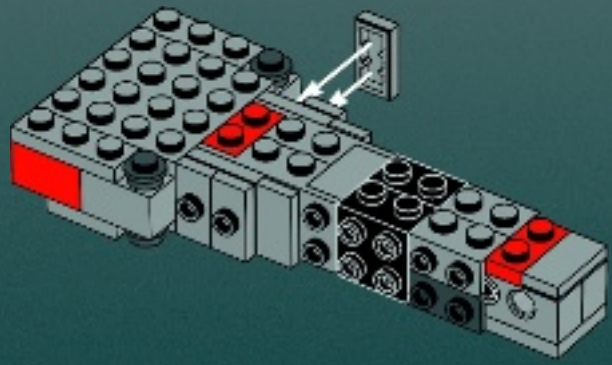

12

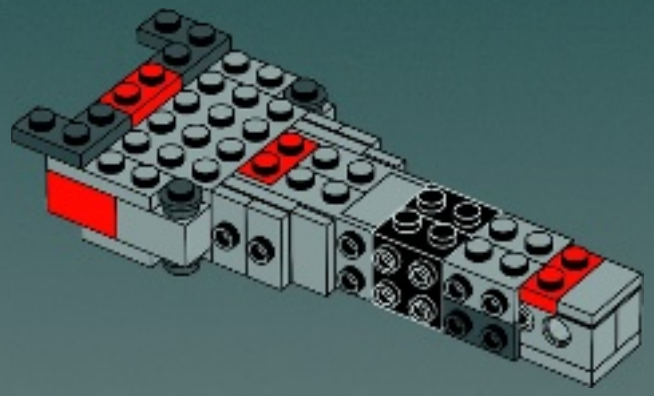

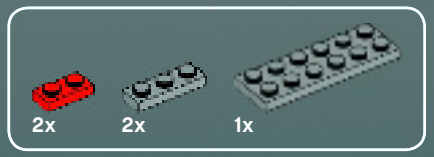

13

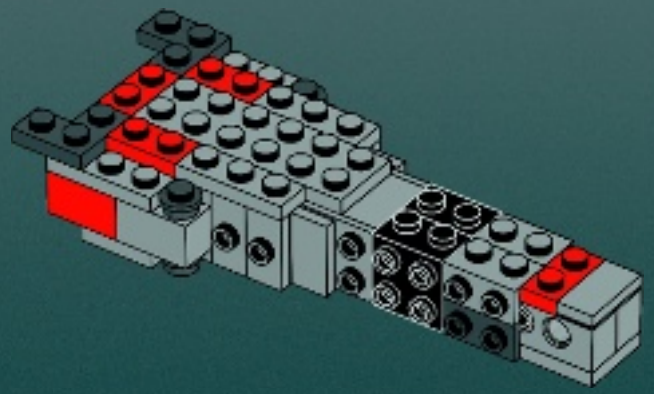

14

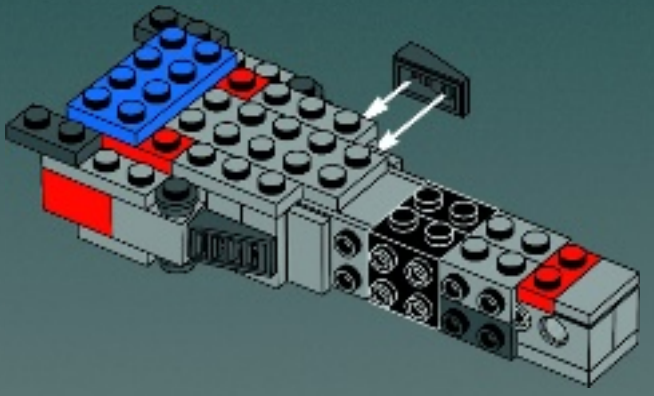

15

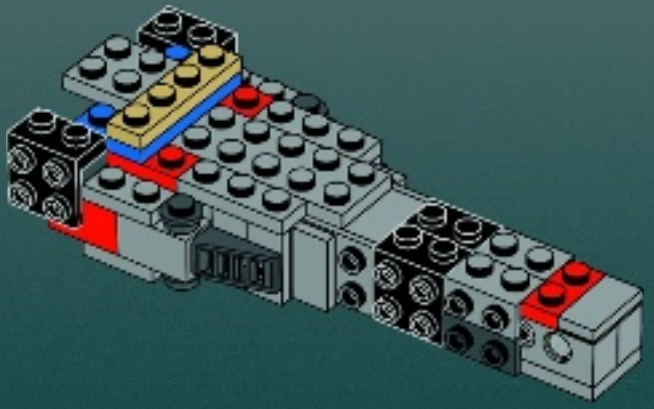

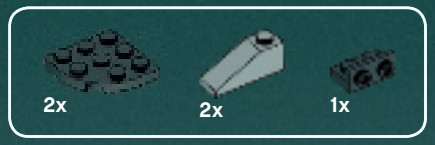

16

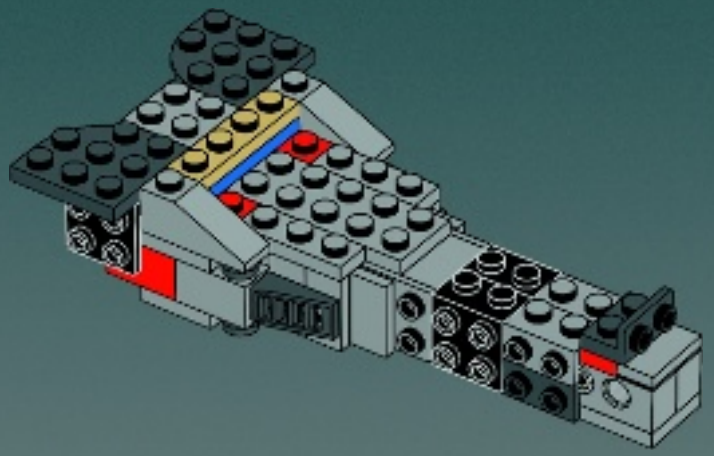

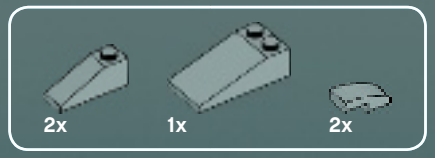

17

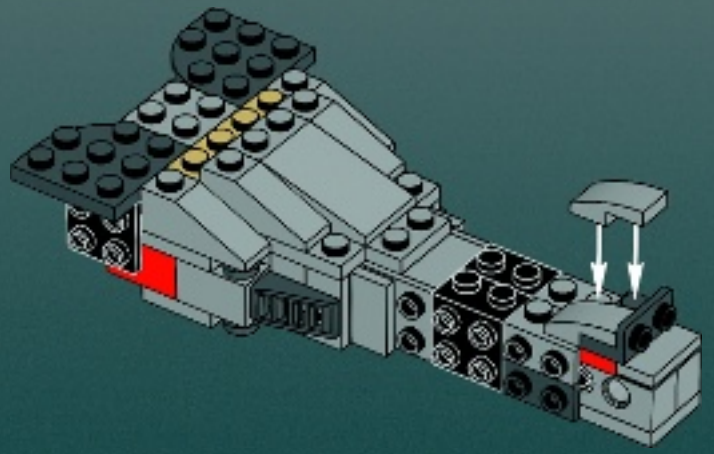

18

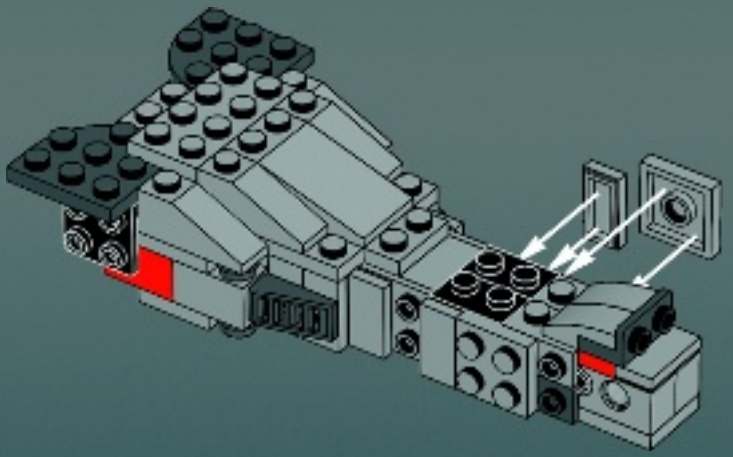

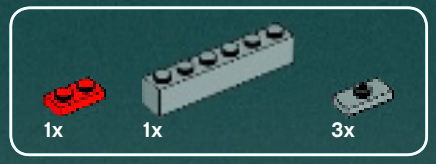

19

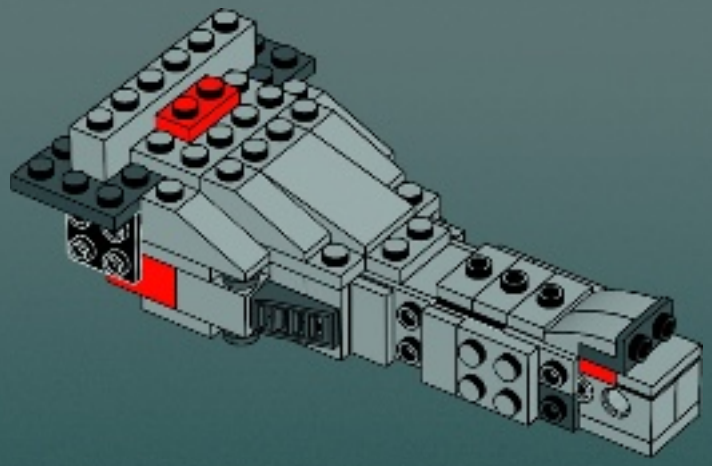

20

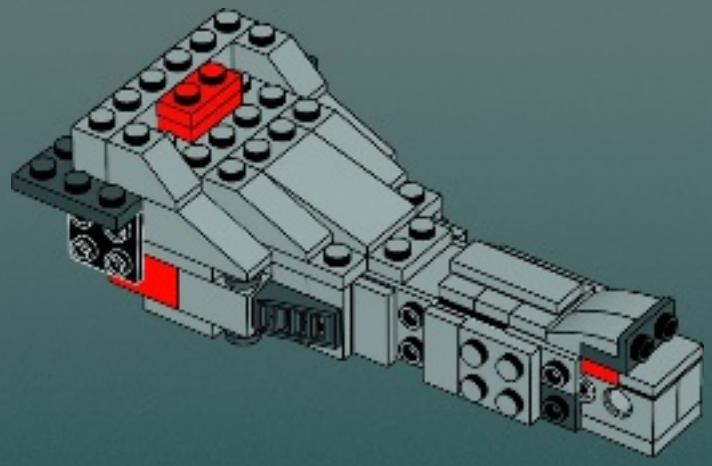

21

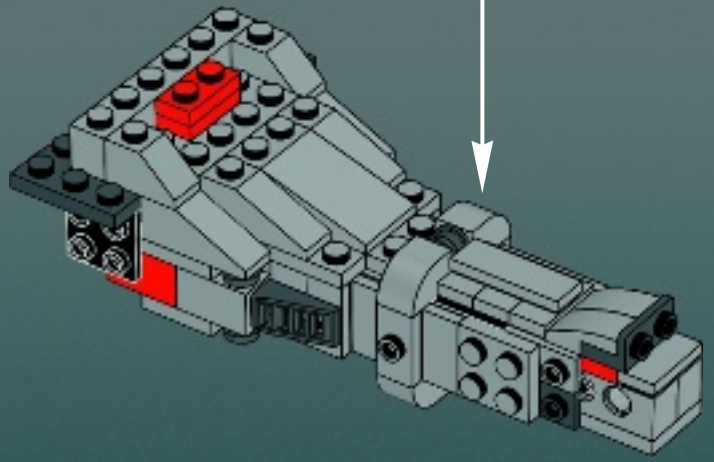

22

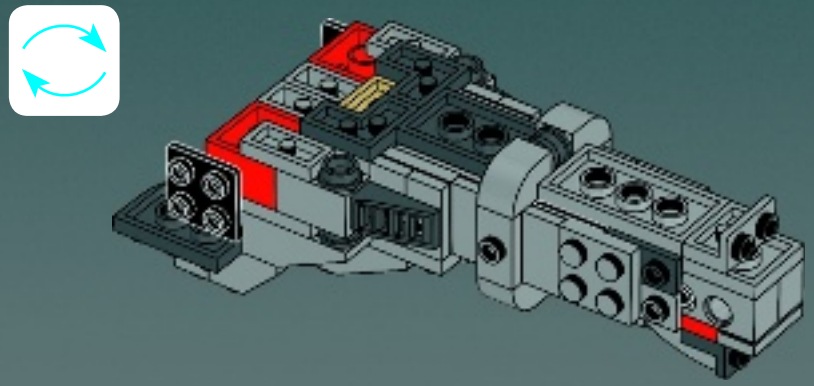

23

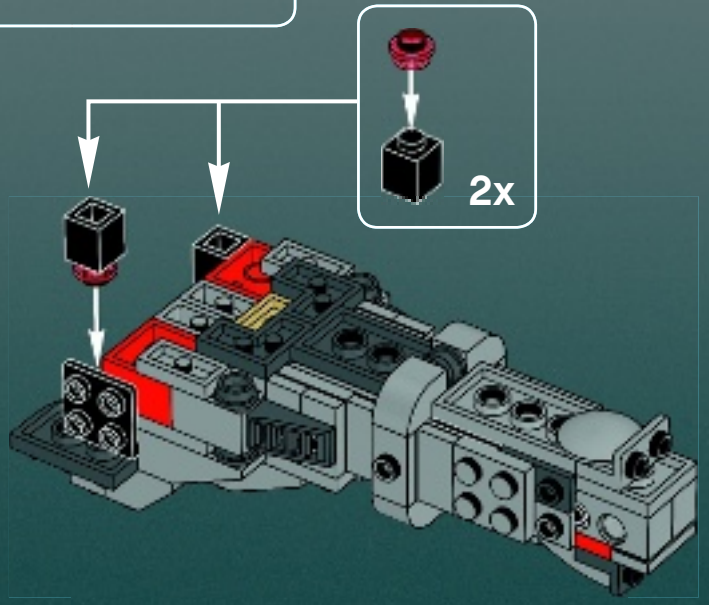

1x

24

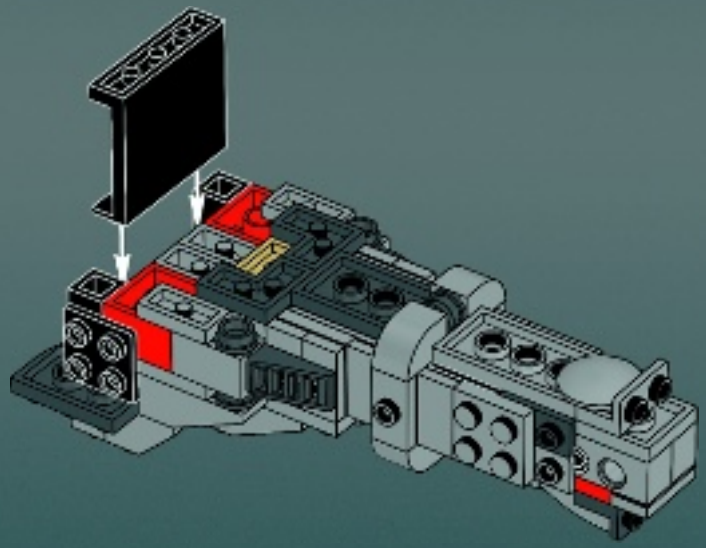

2x

1x

25

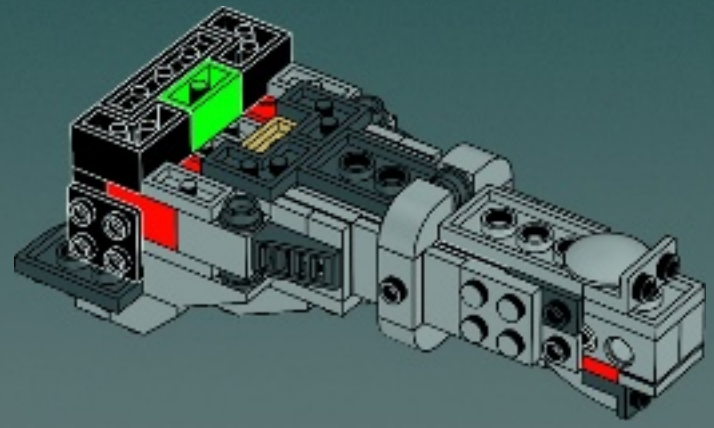

1x

1x

26

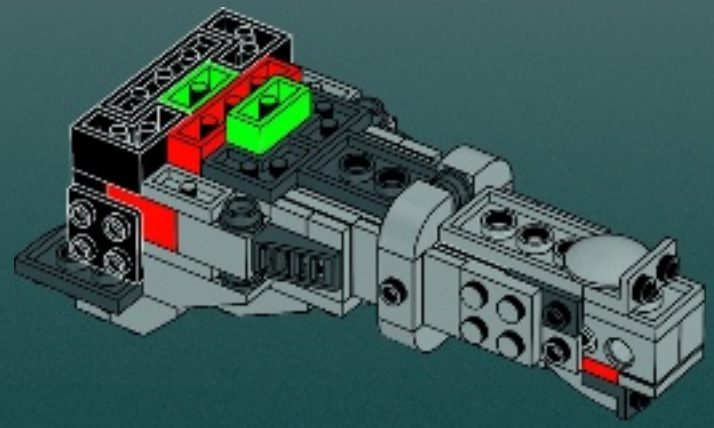

27

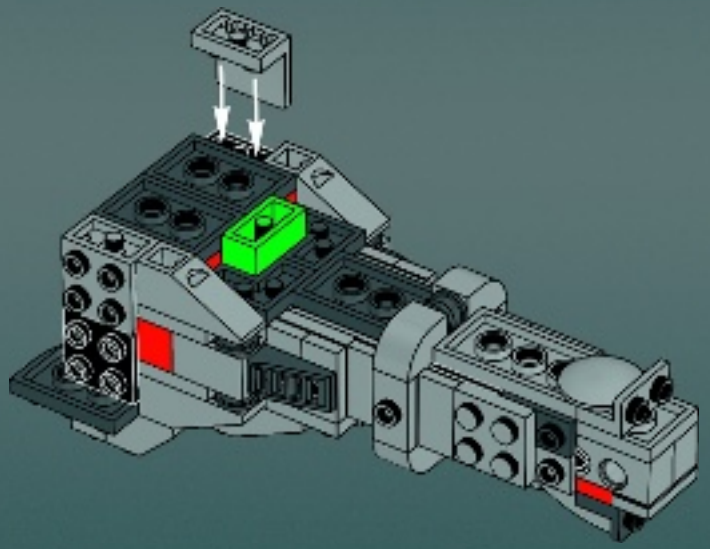

28

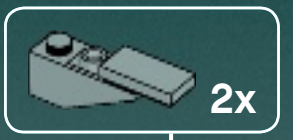

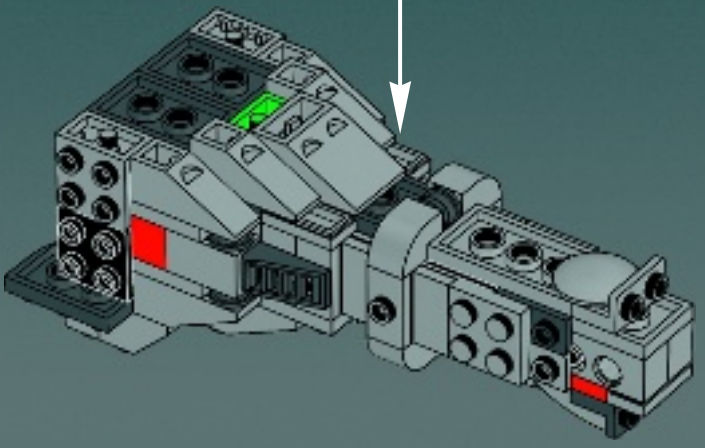

29

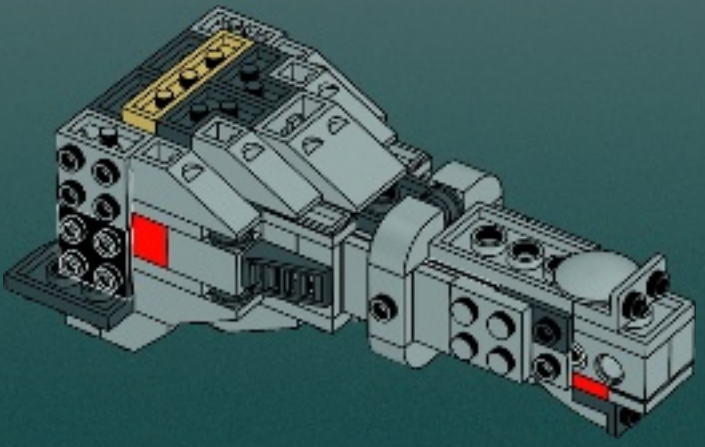

30

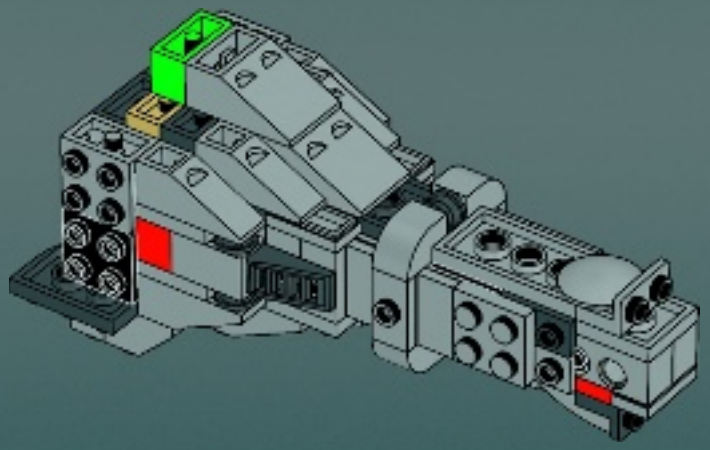

31

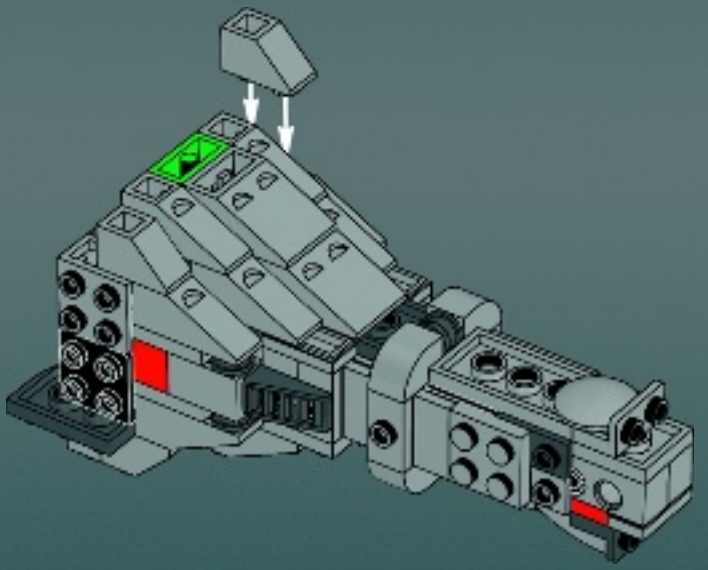

32

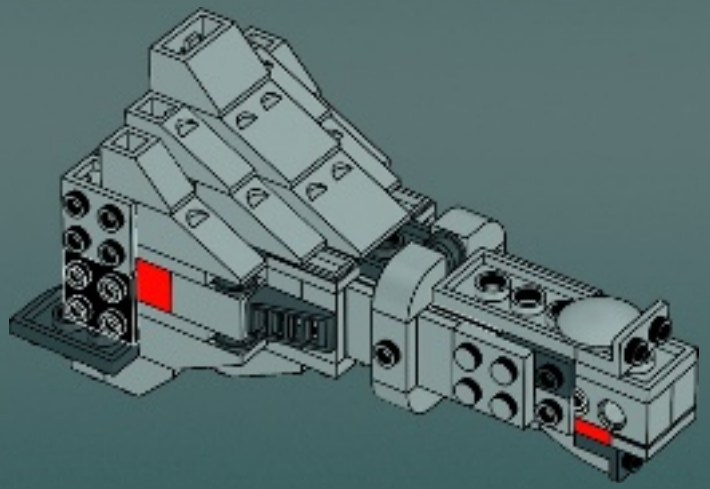

33

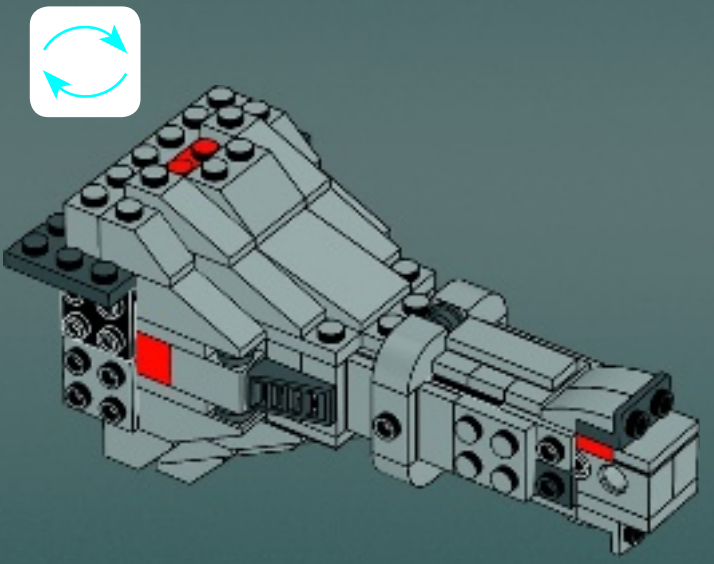

34

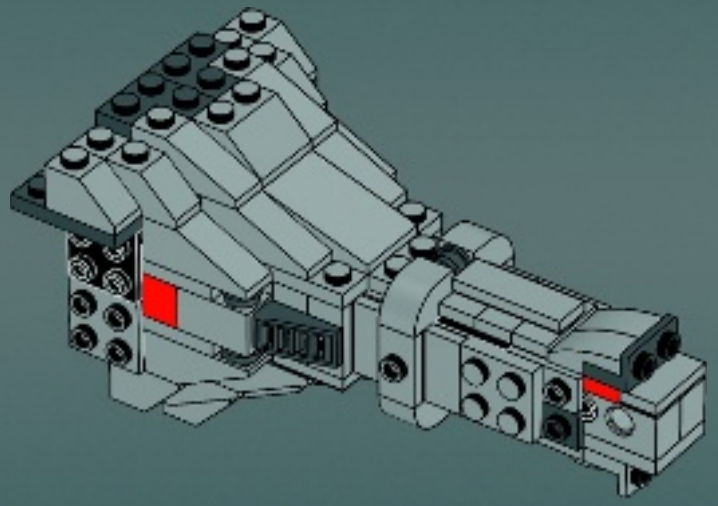

2x

35

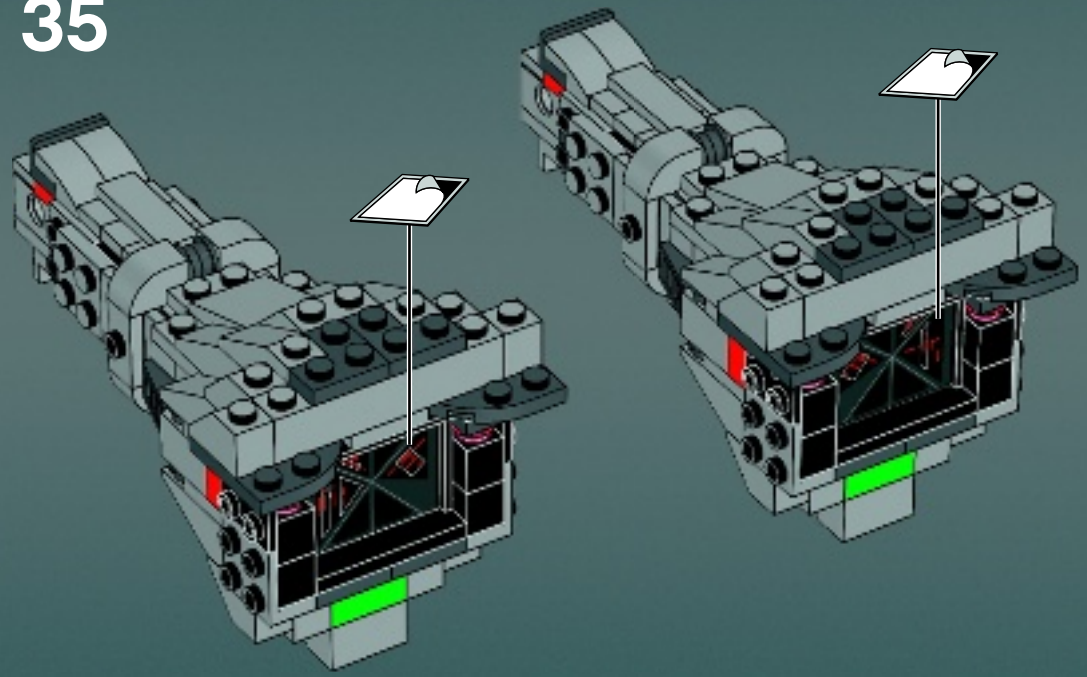

29

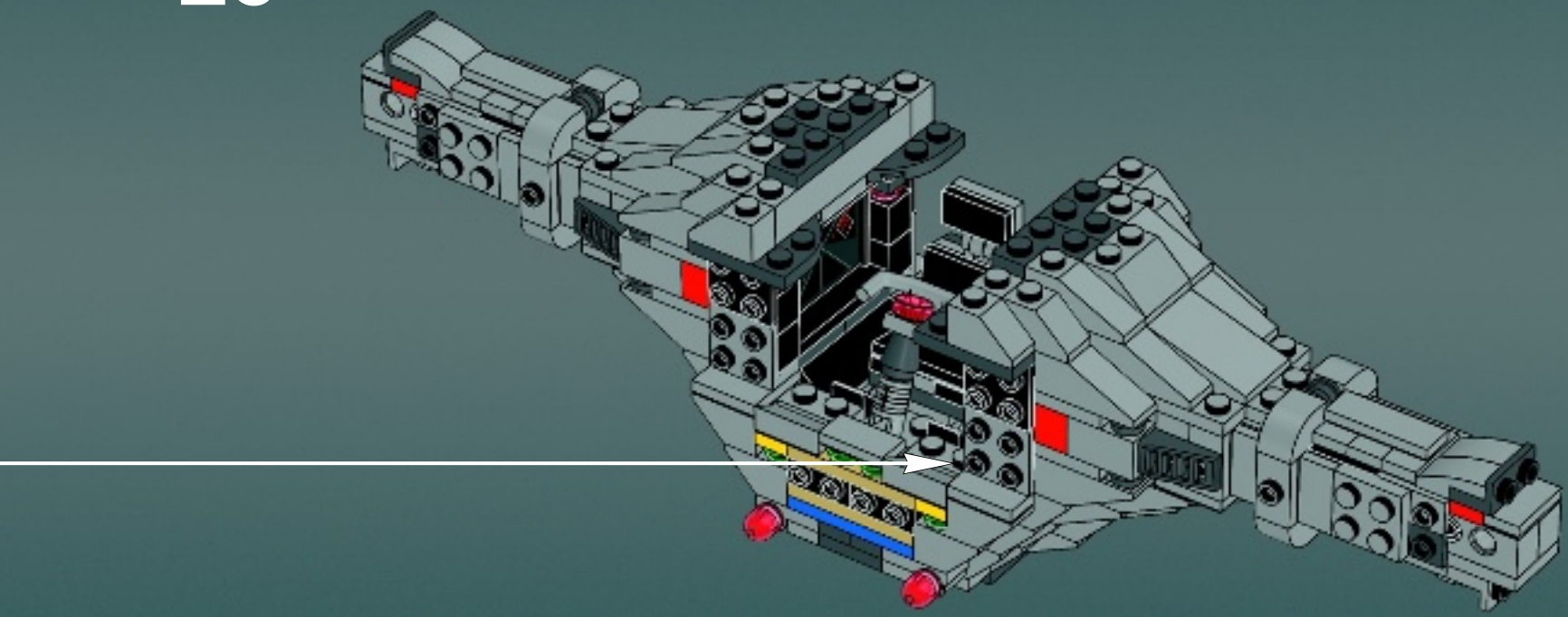

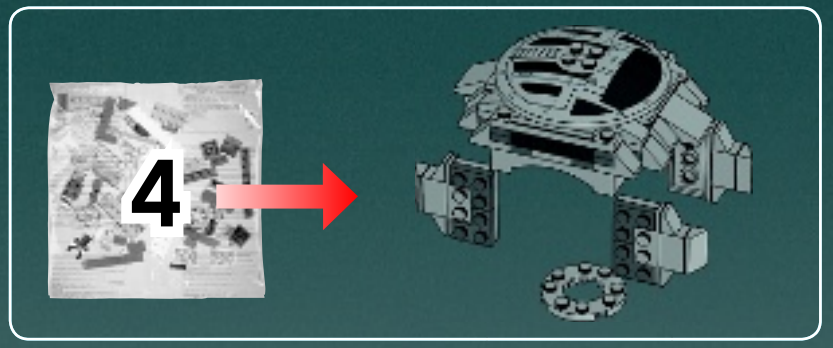

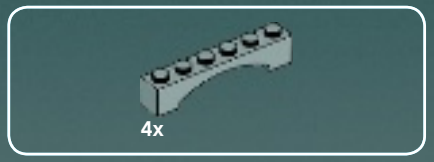

30

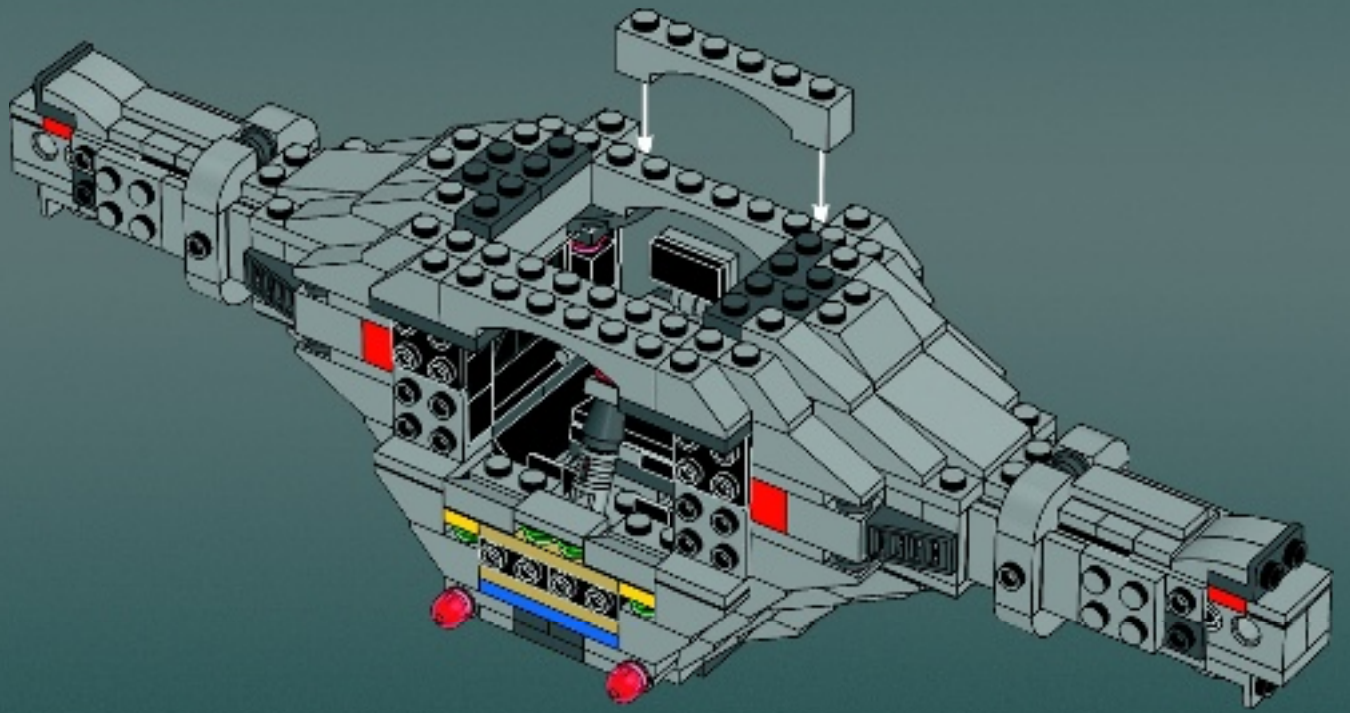

31

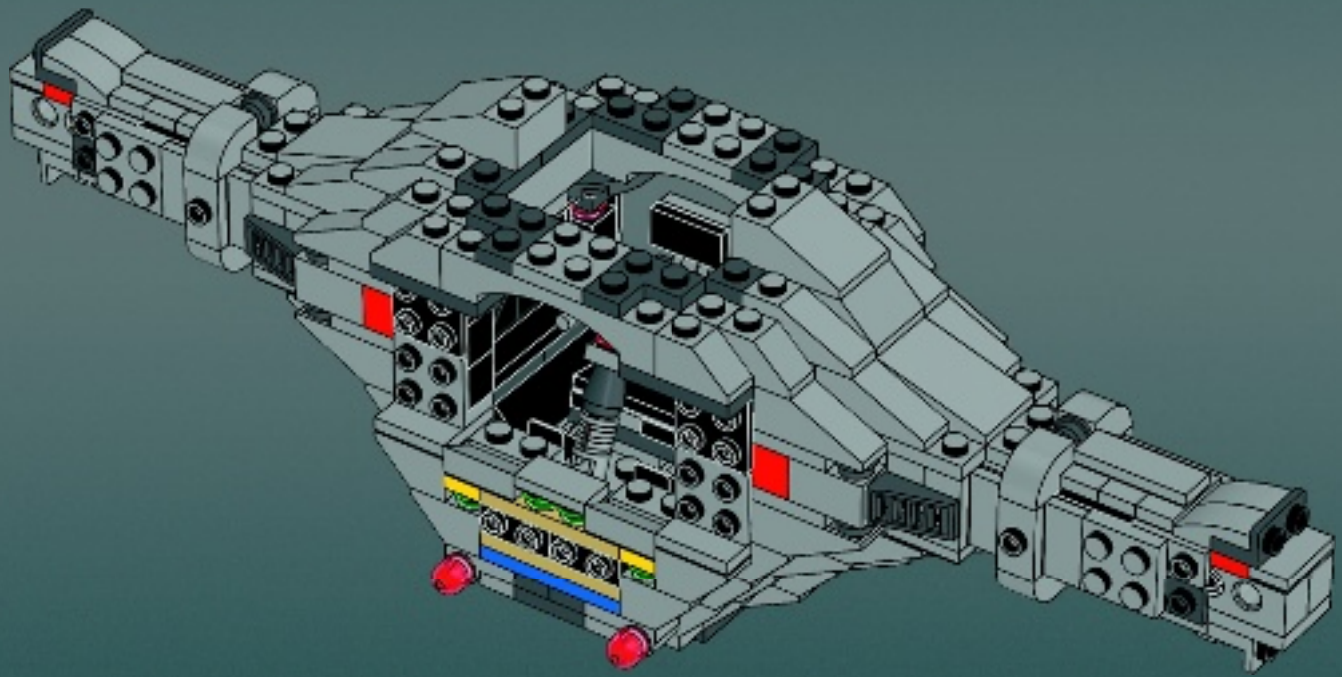

12x

32

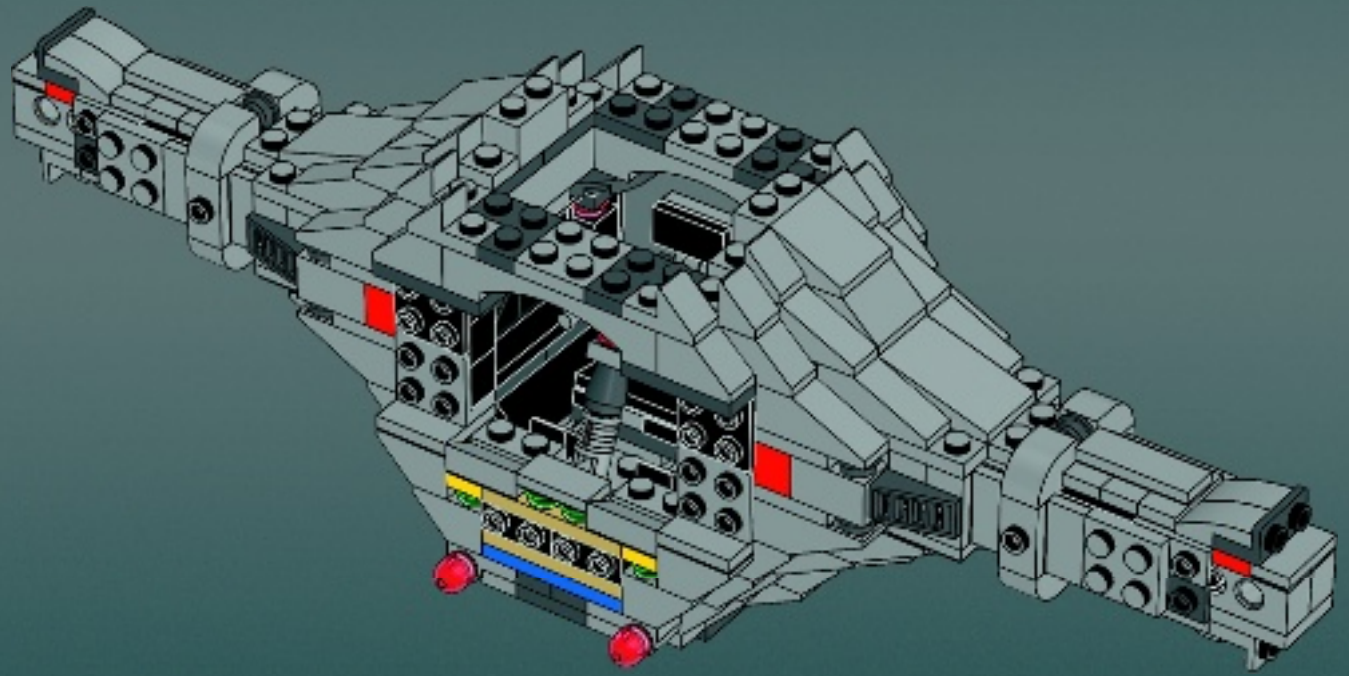

4x

33

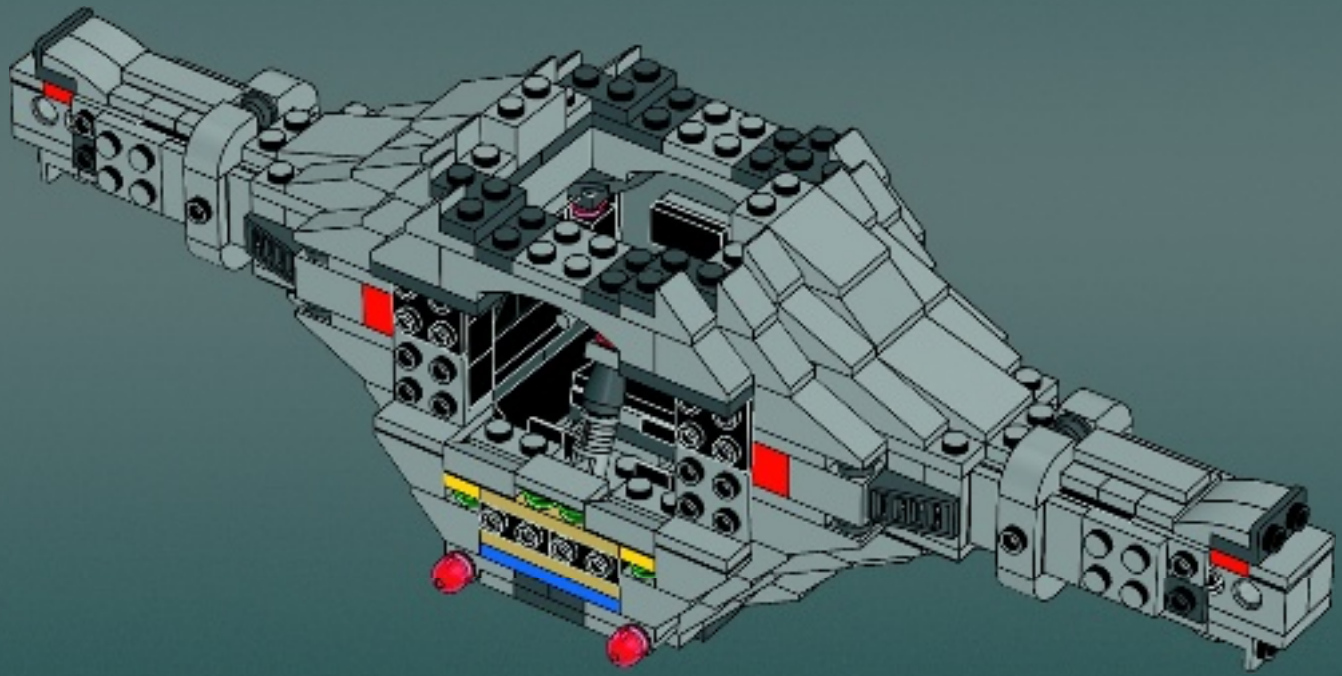

34

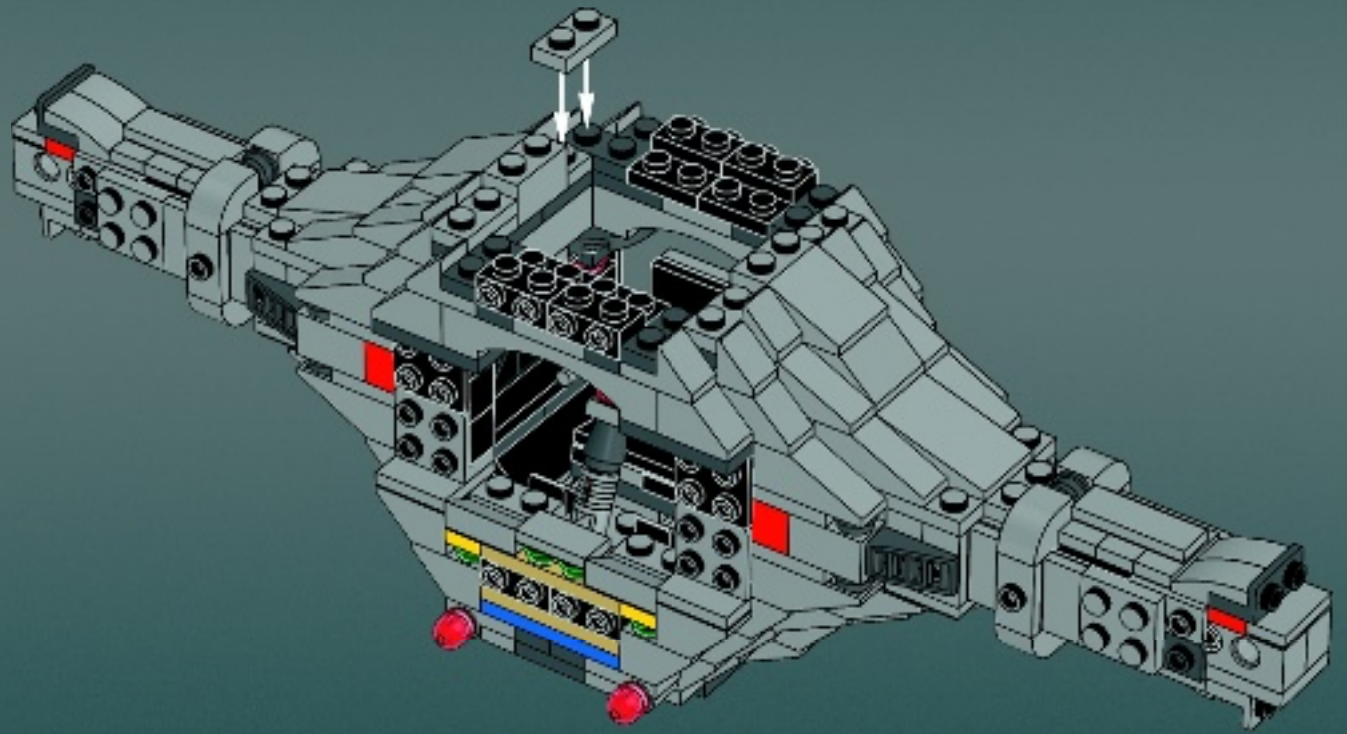

35

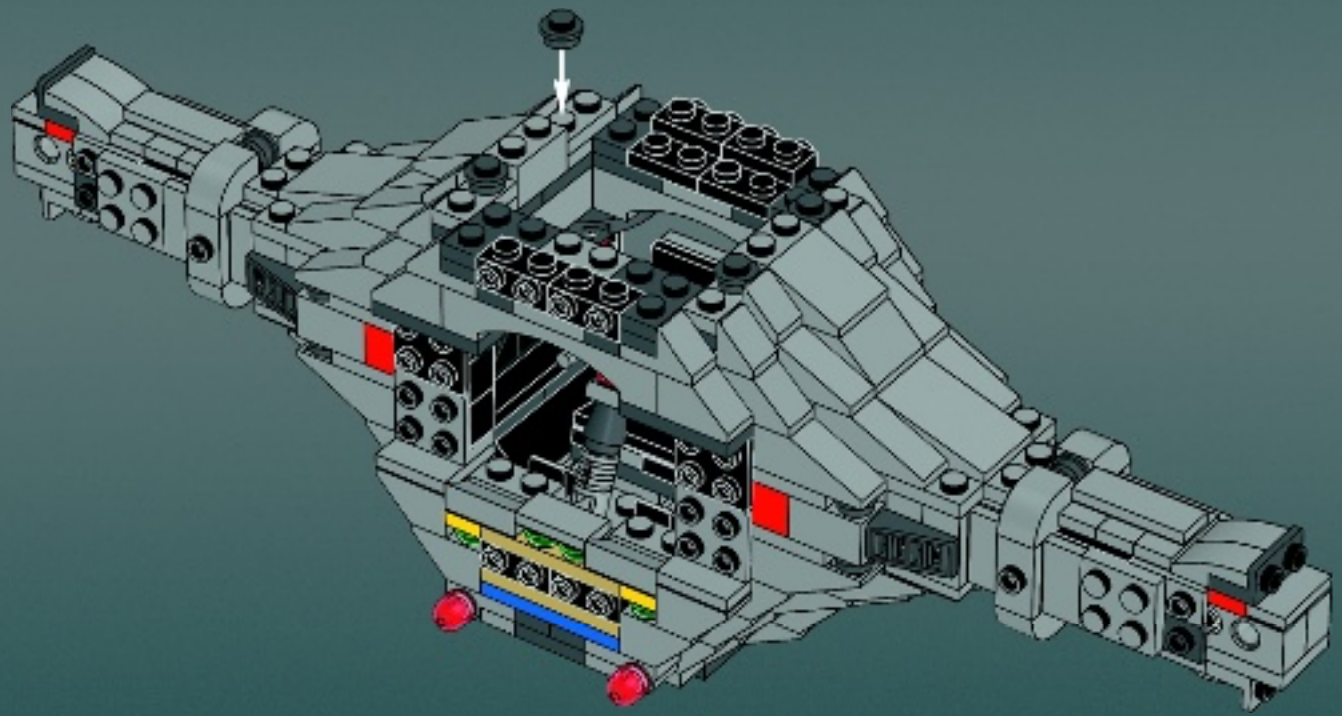

36

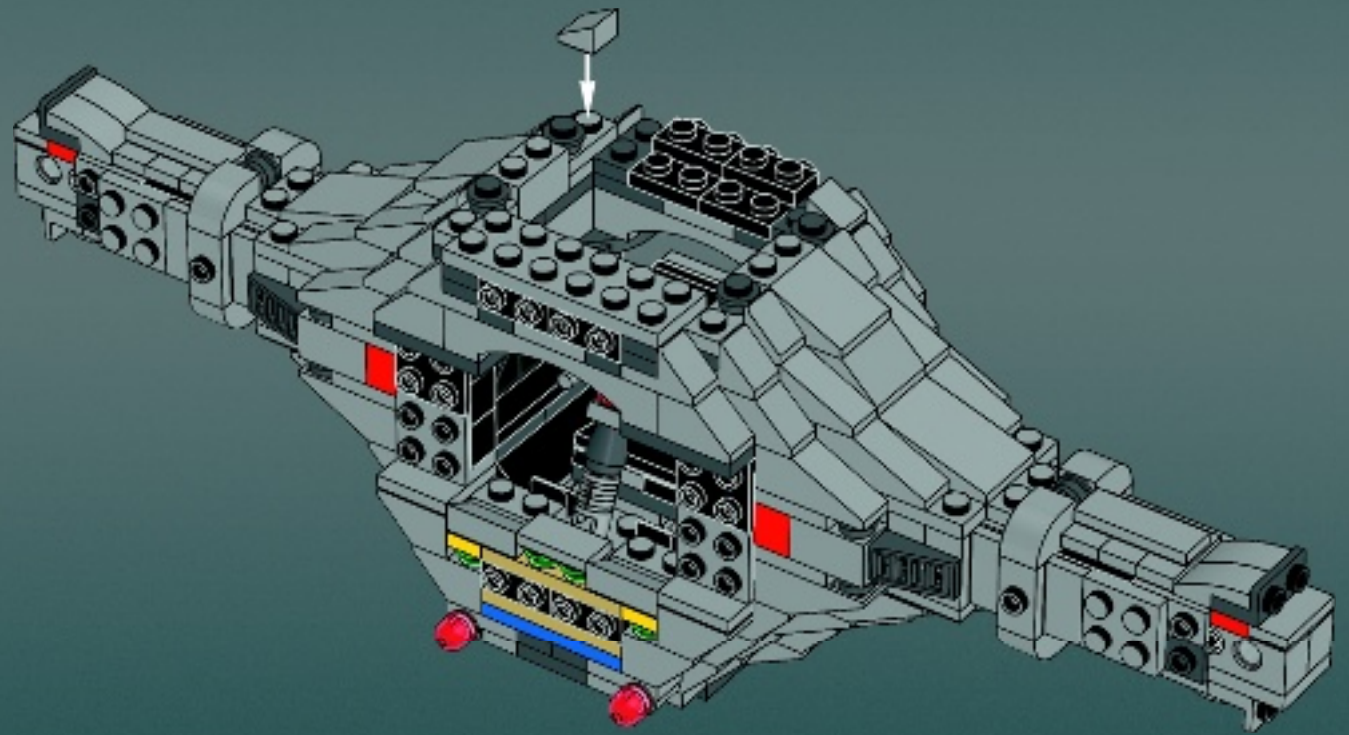

37

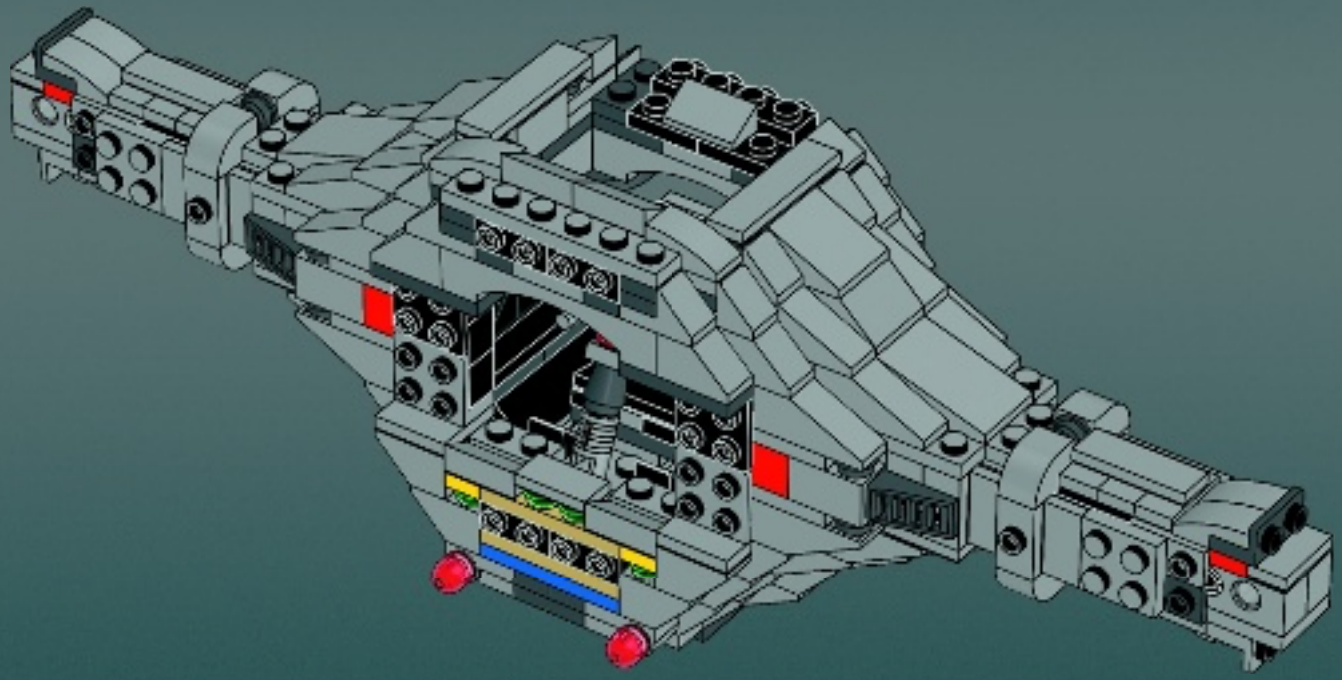

1

2

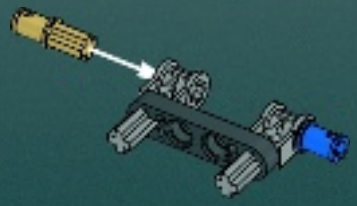

3

4

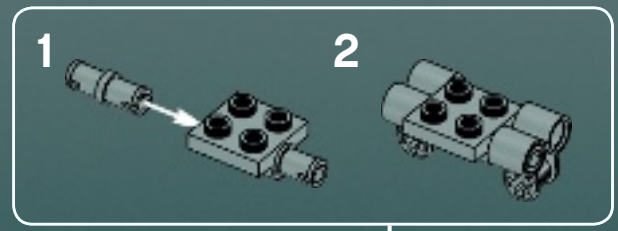

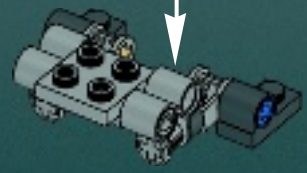

38

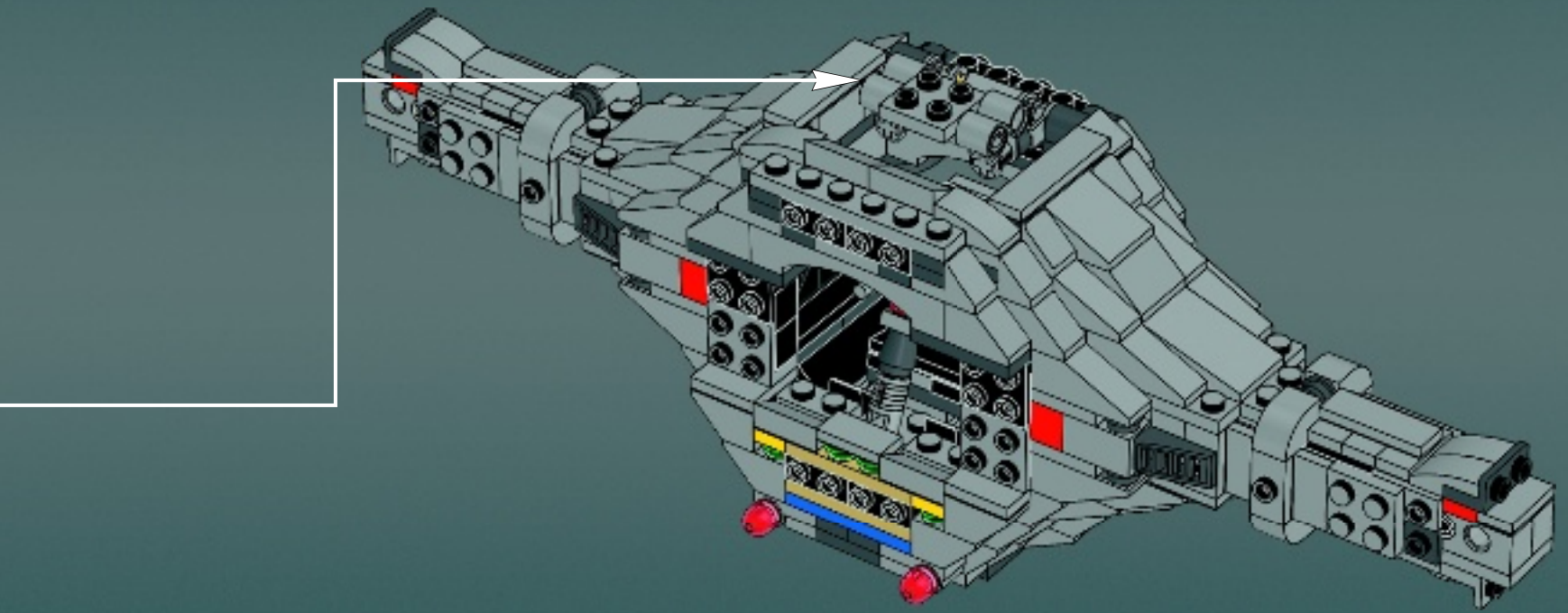

39

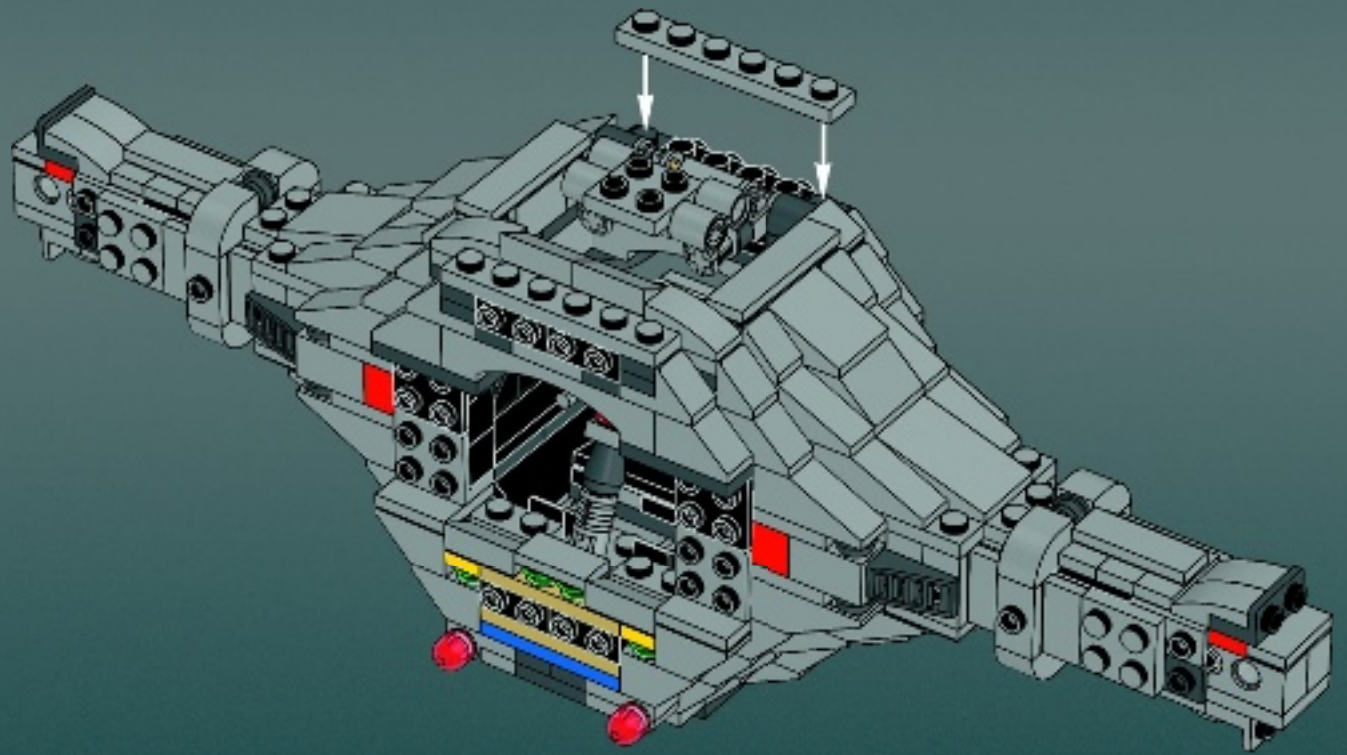

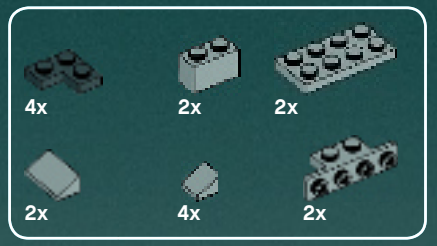

40

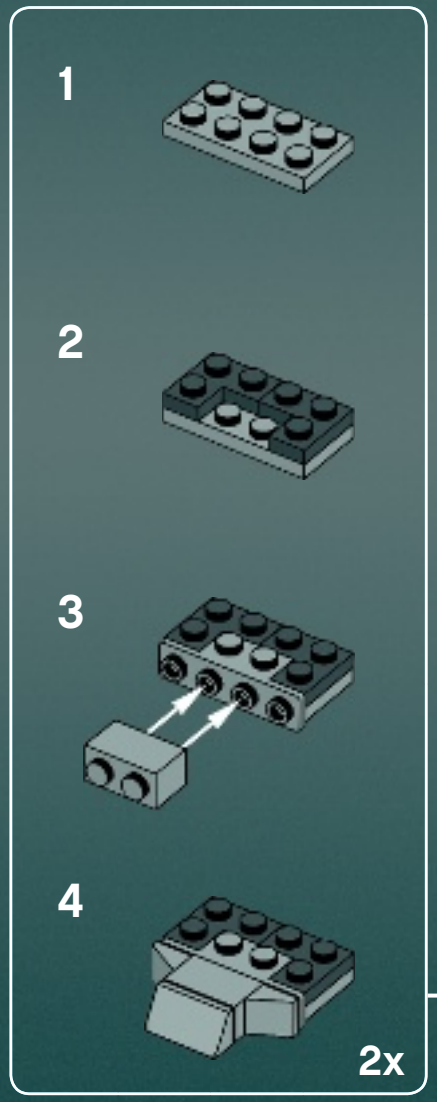

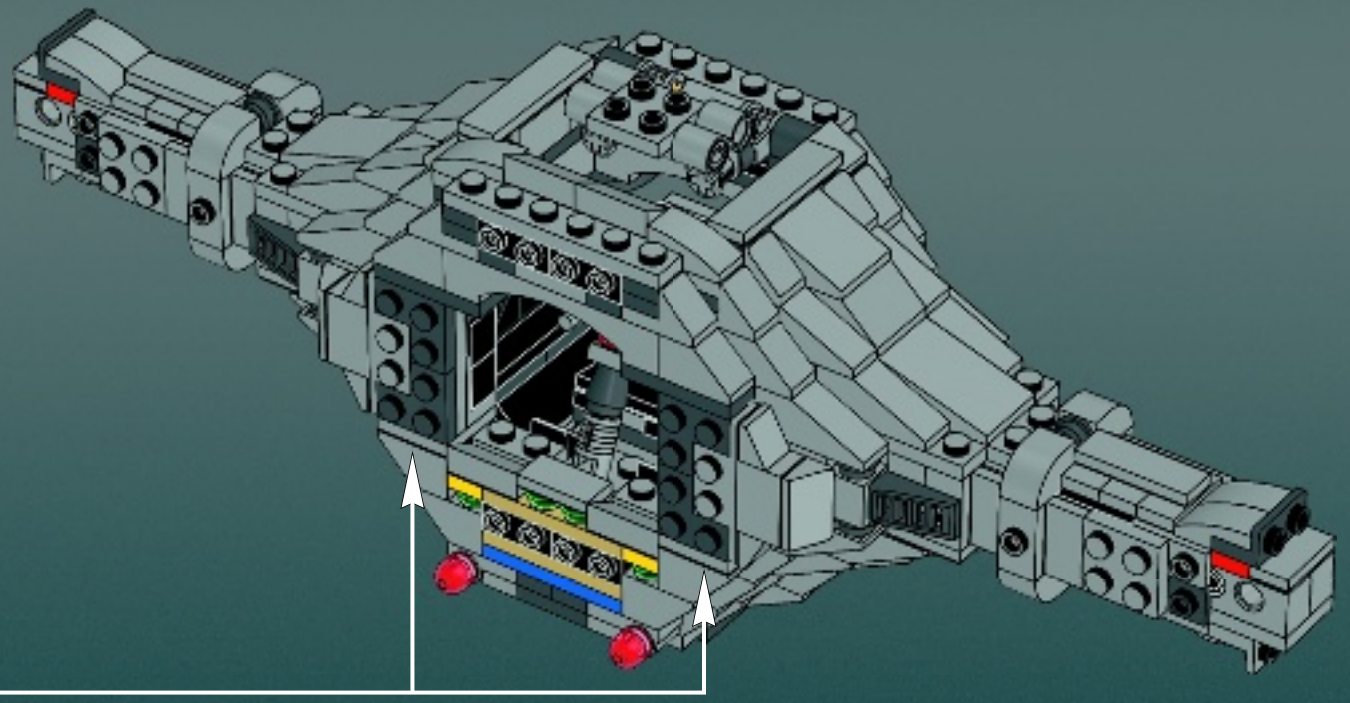

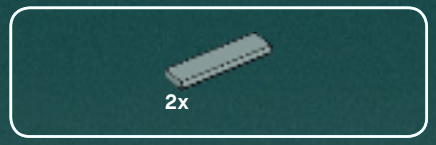

41

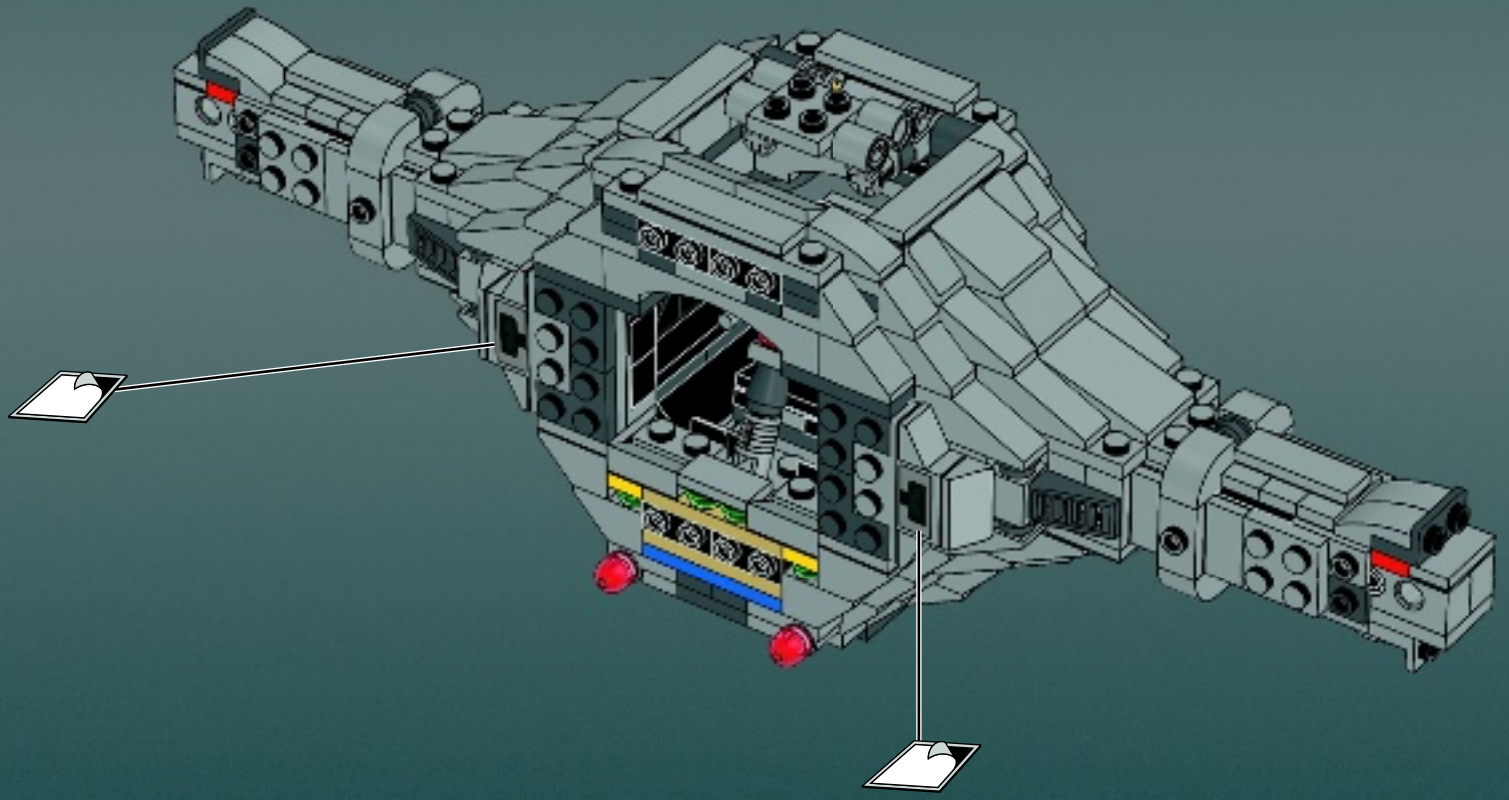

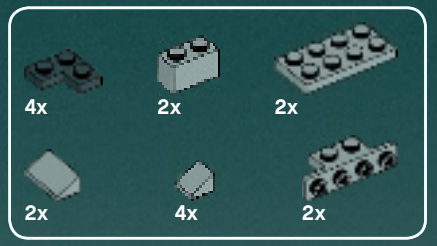

42

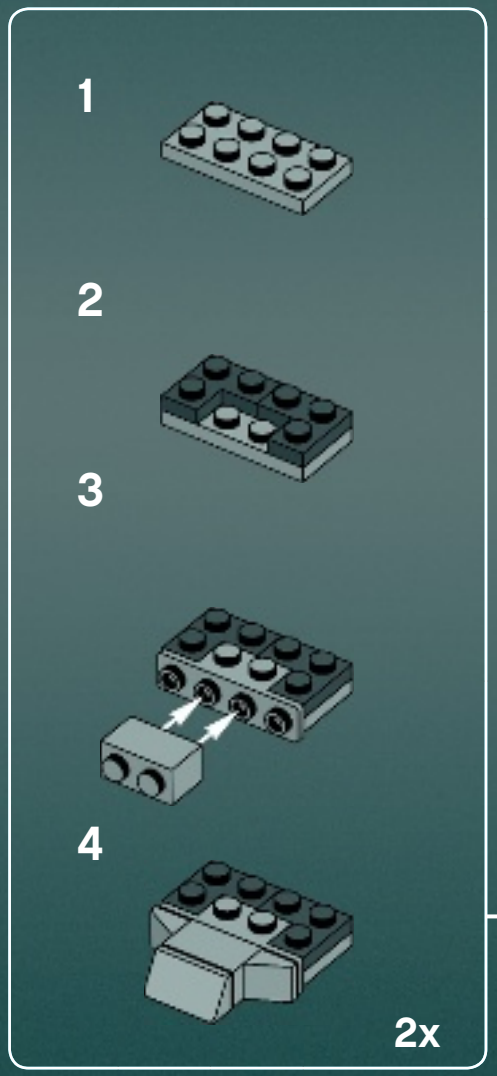

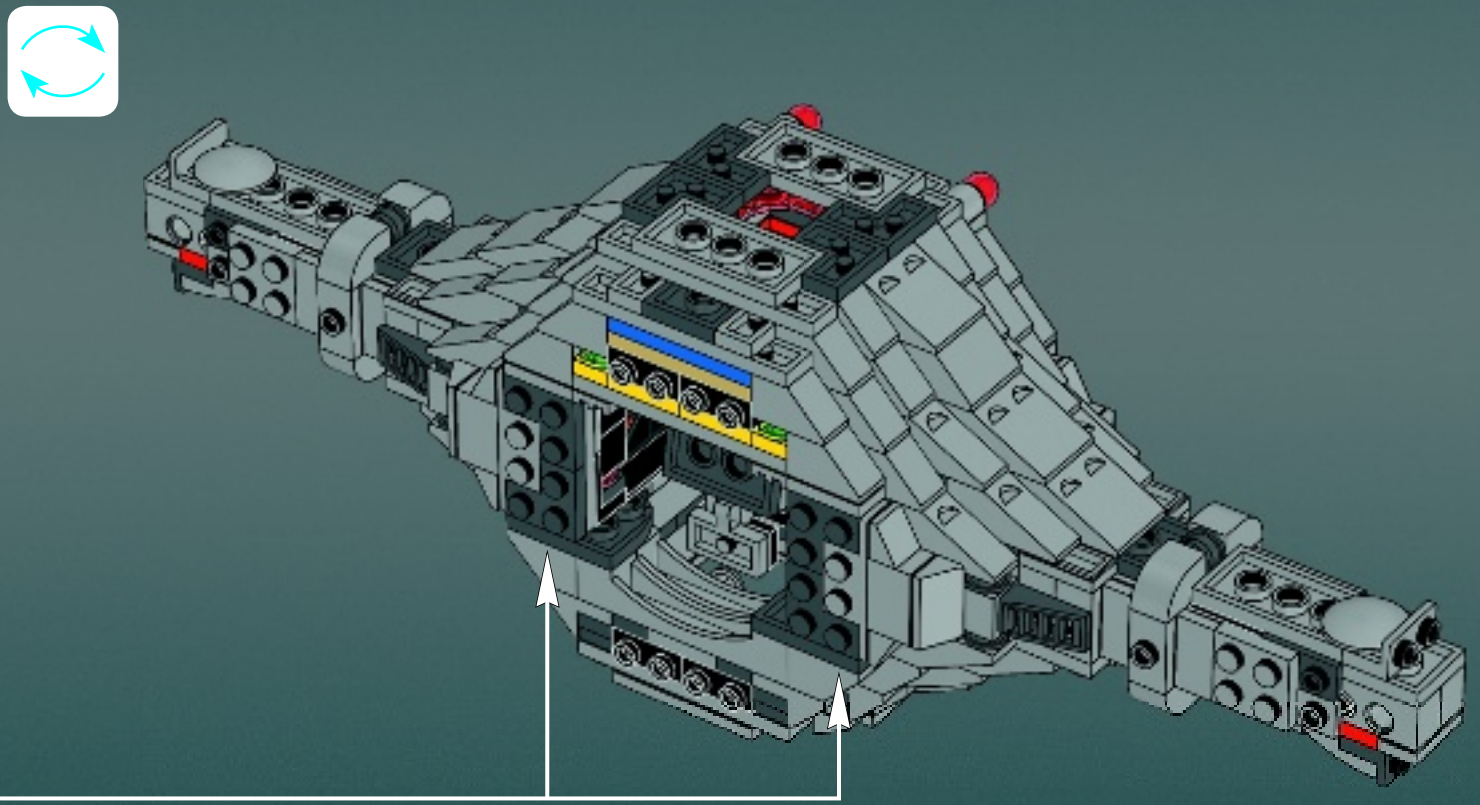

43

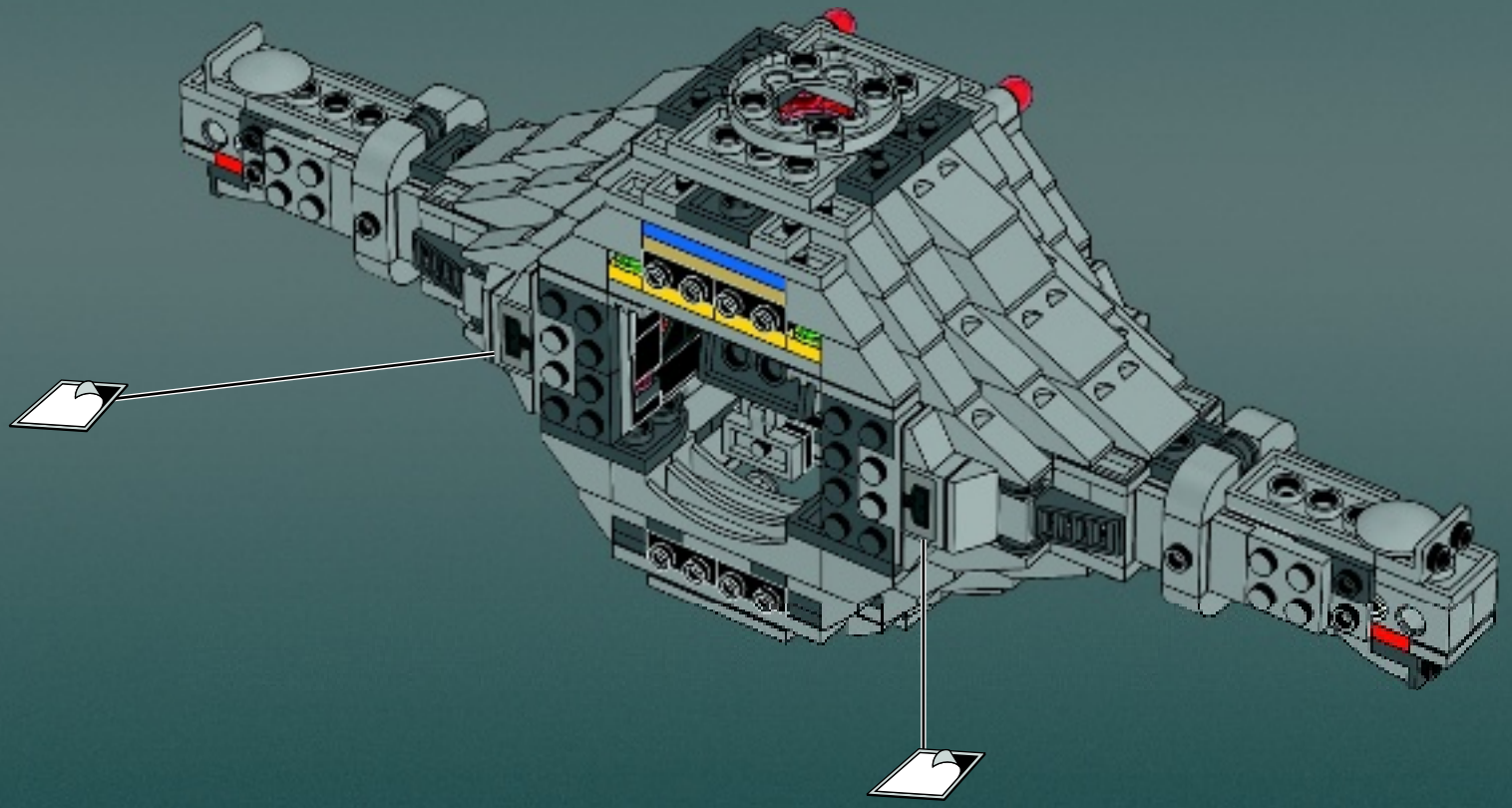

44

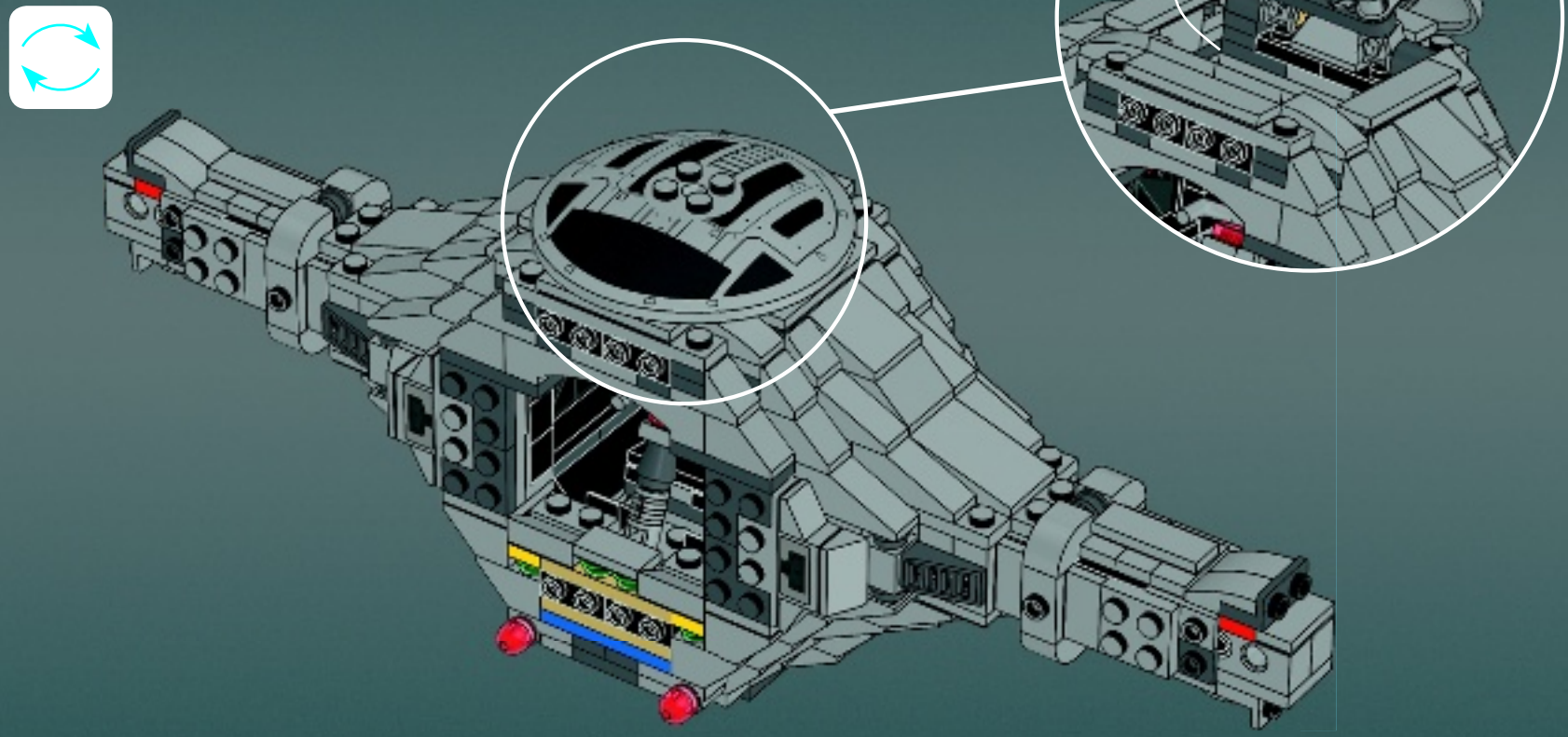

2x

1x

1

4x

2

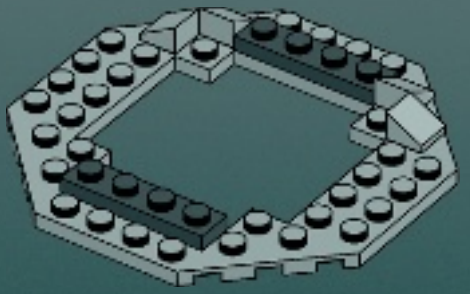

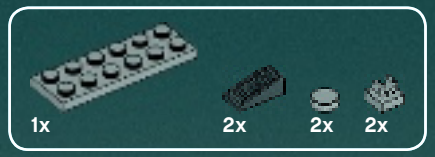

3

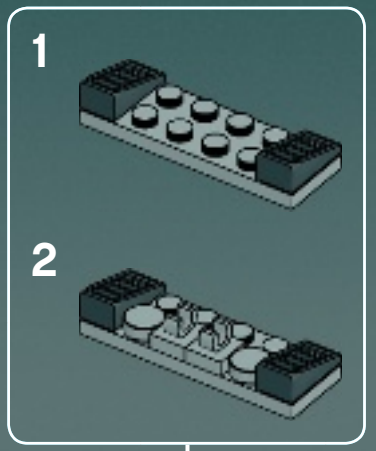

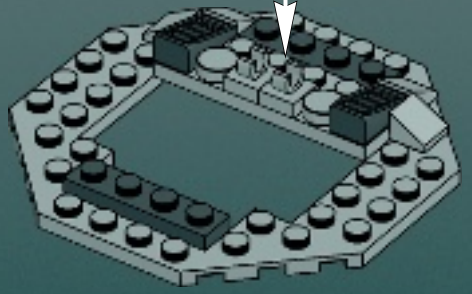

4

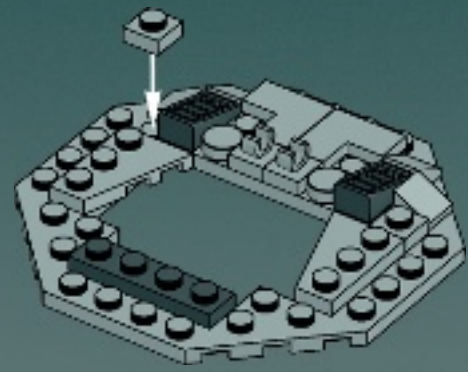

5

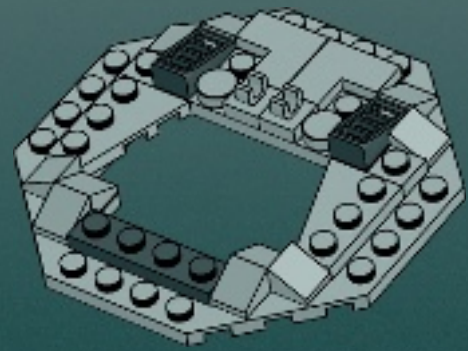

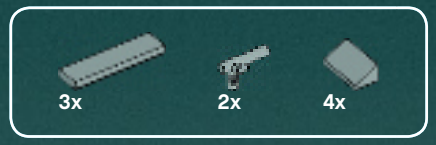

6

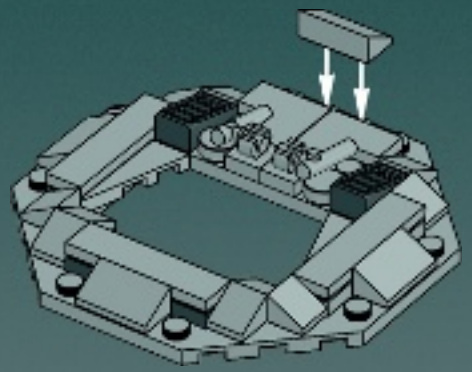

7

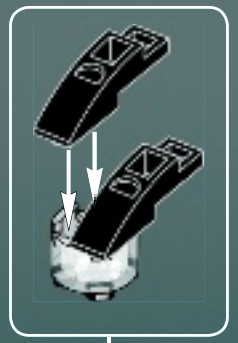

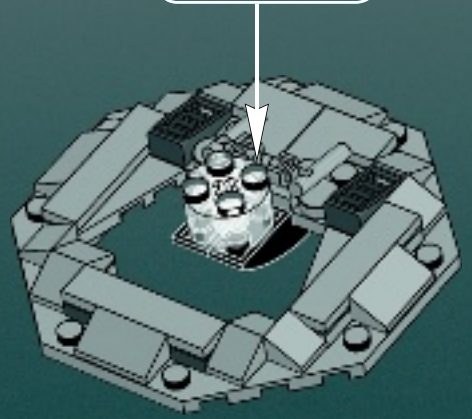

8

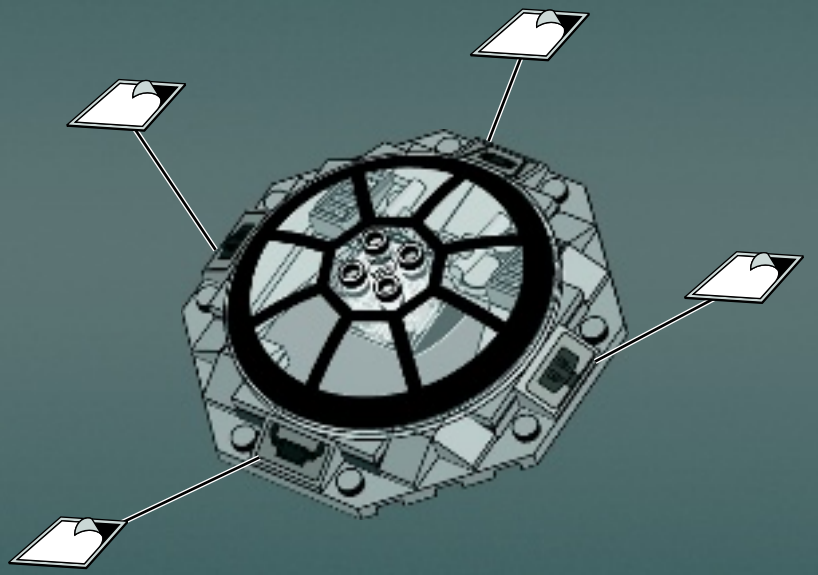

45

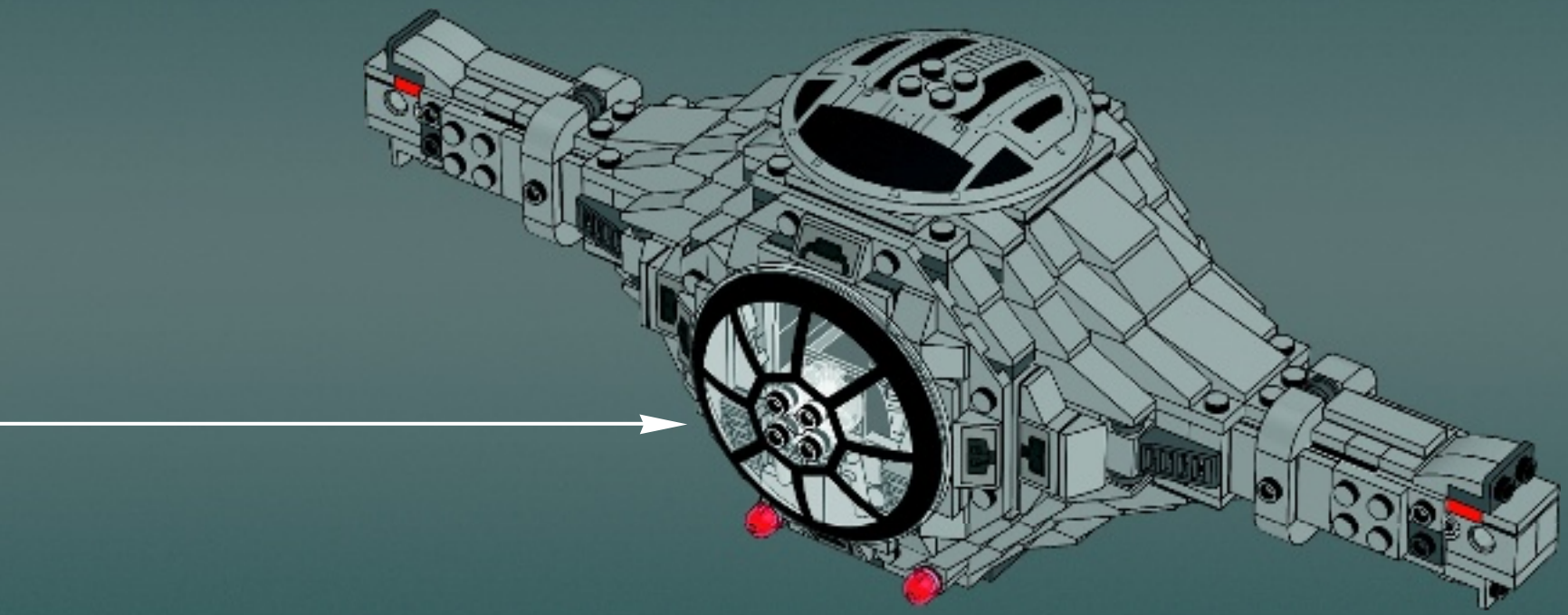

1

2

3

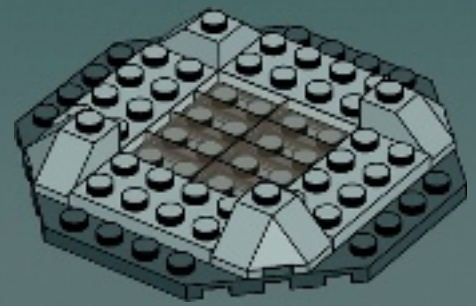

4

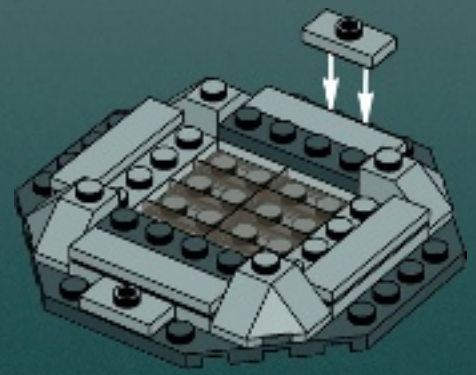

5

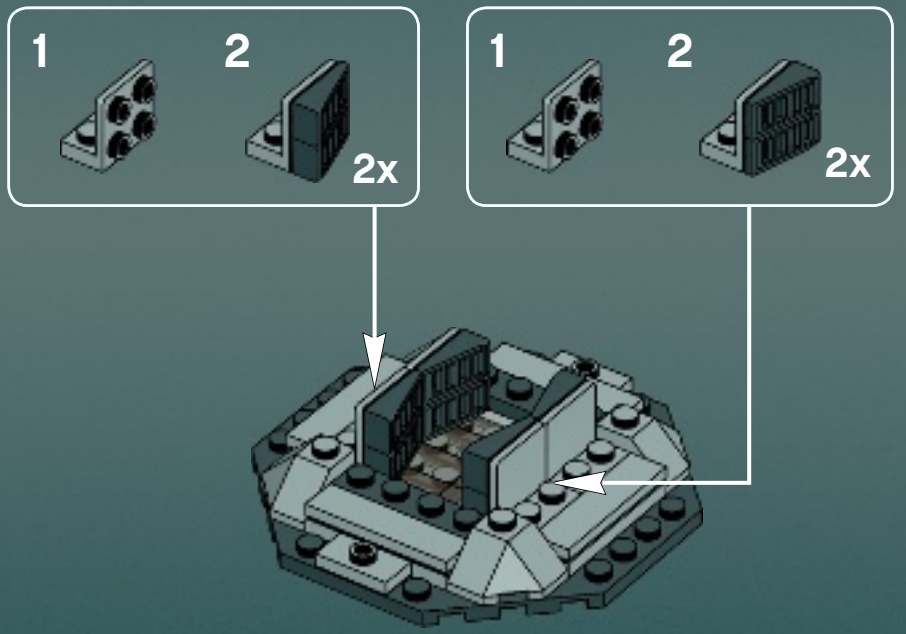

6

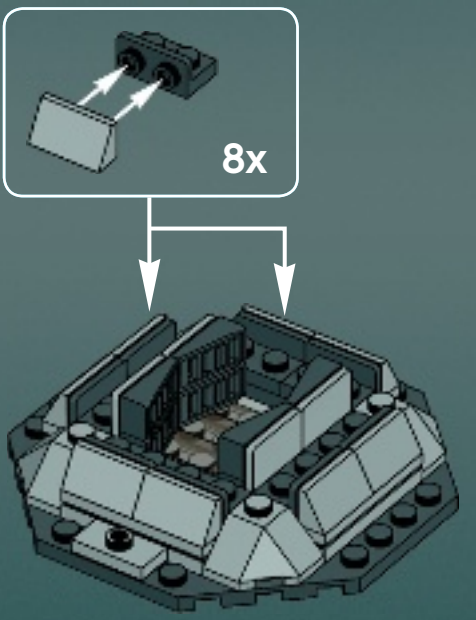

7

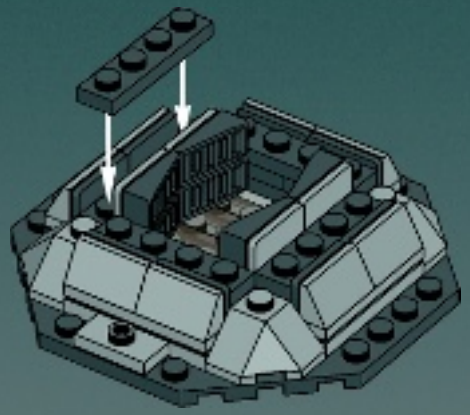

8

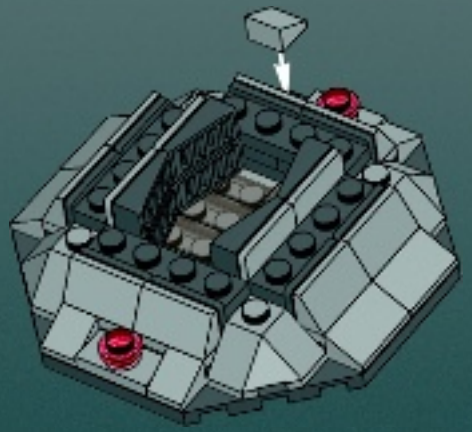

9

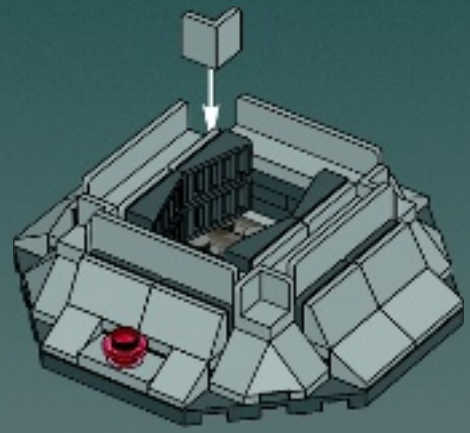

10

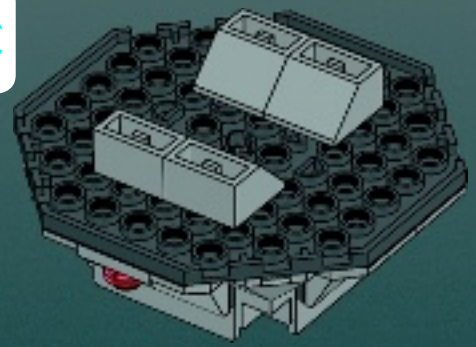

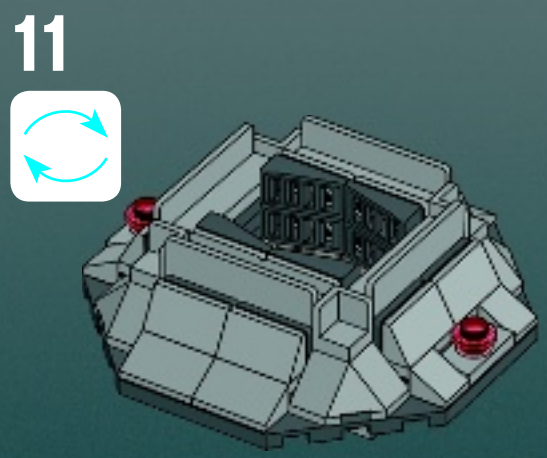
11

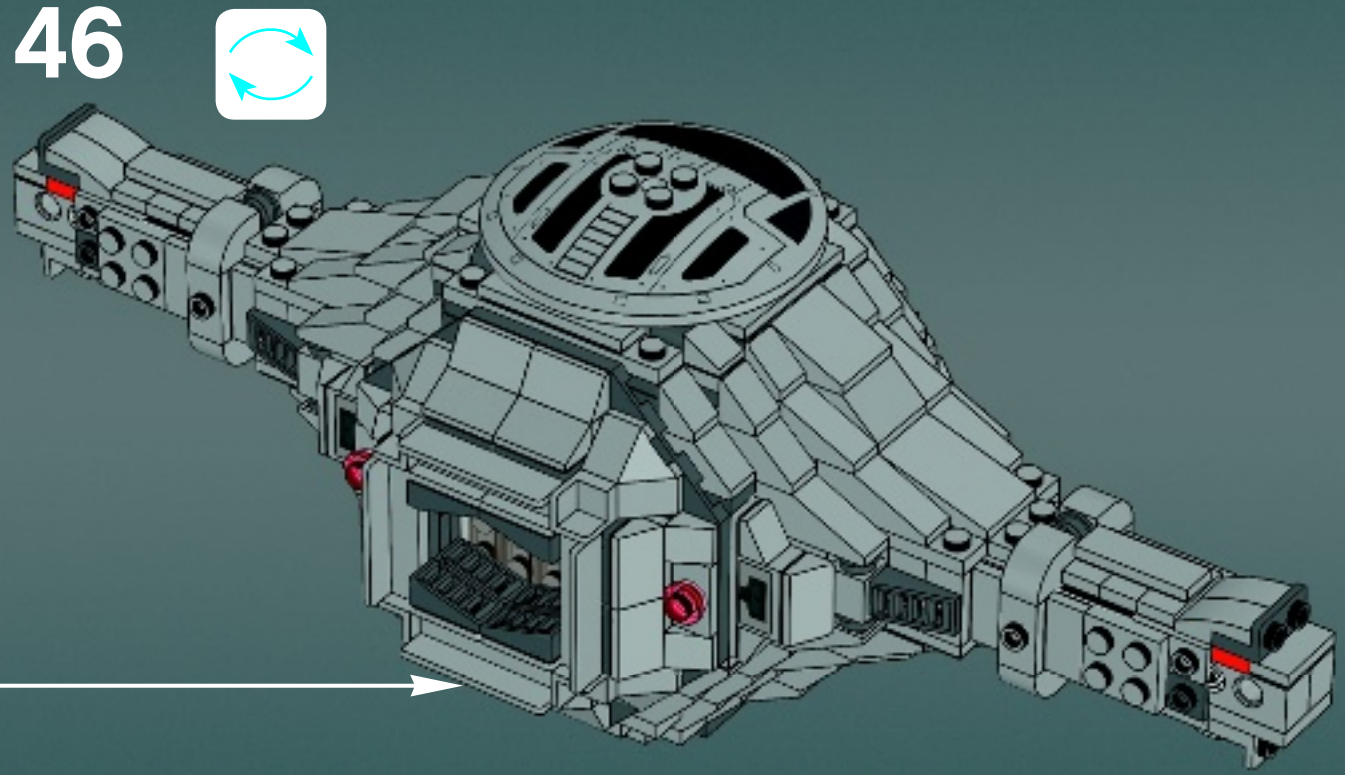
46

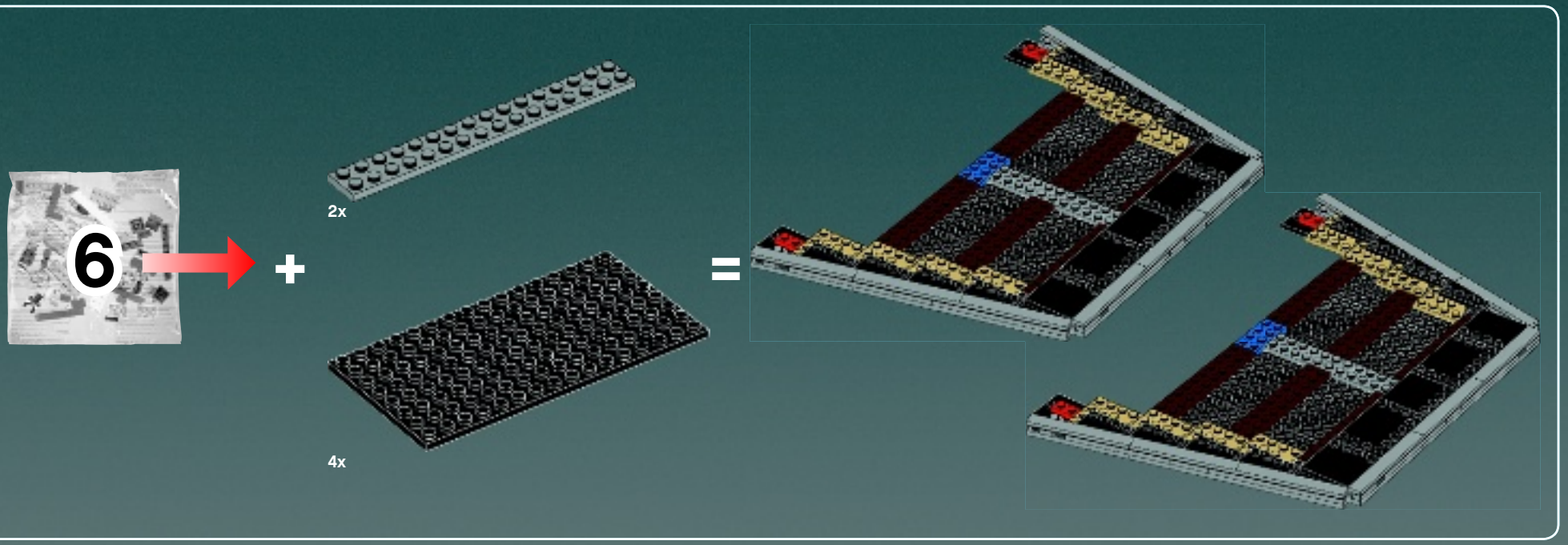
6
2x
4x

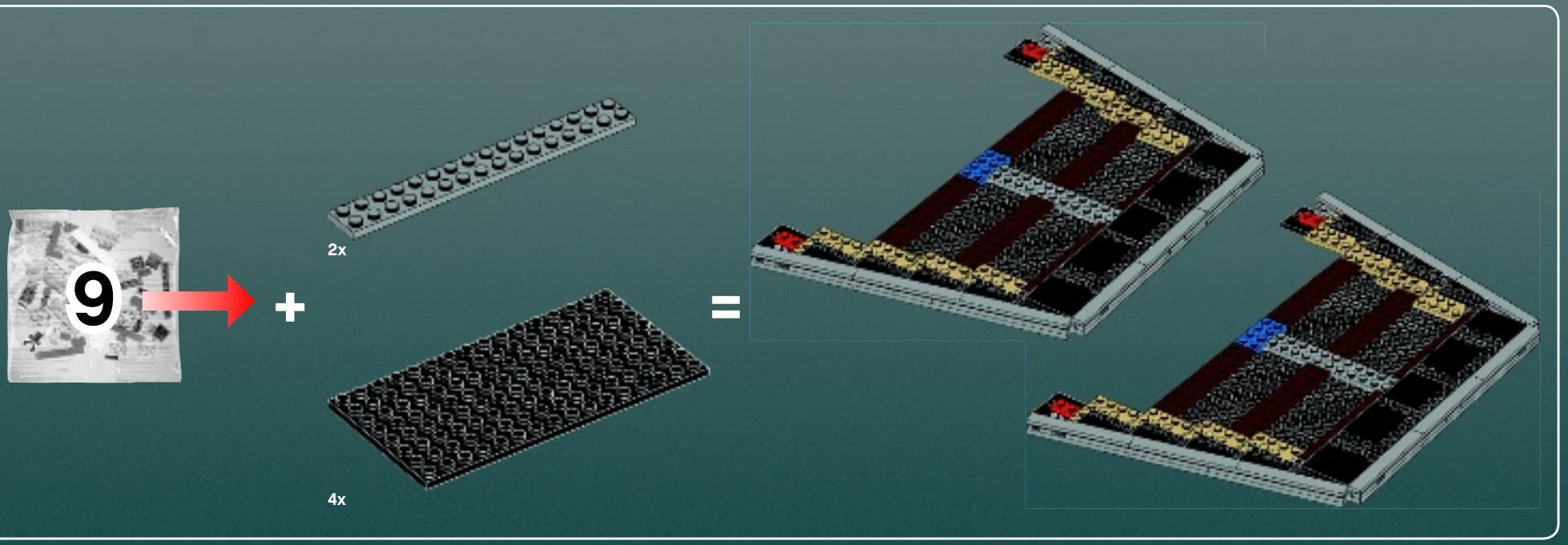
9
2x
4x

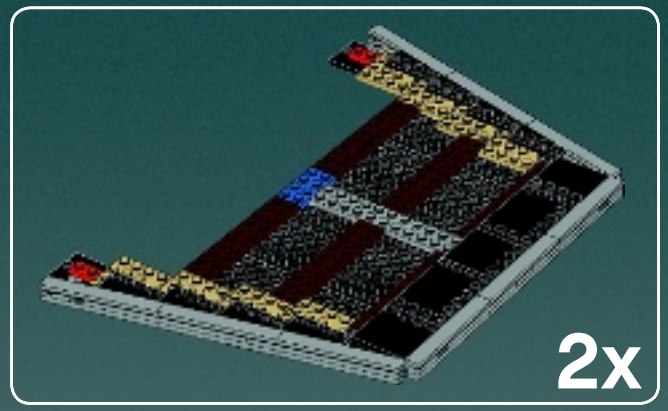

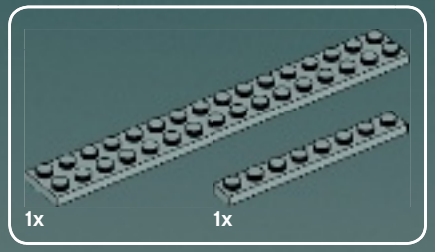

1

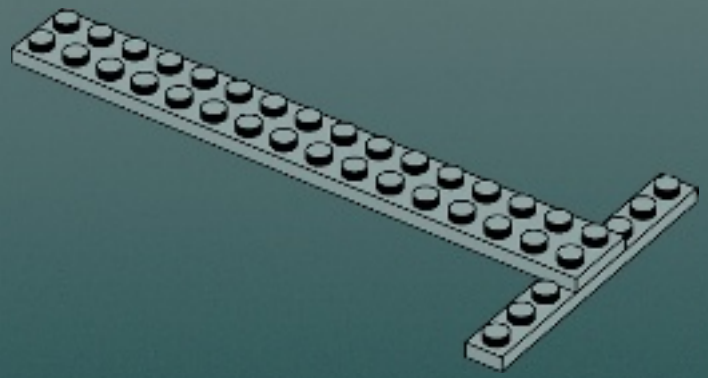

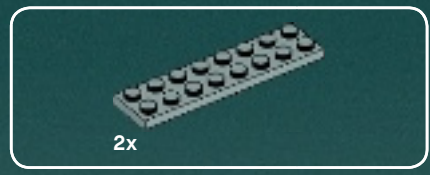

2

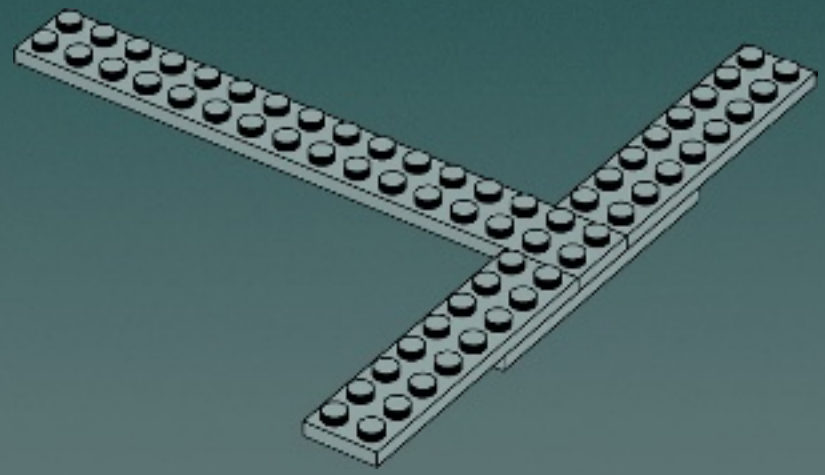

3

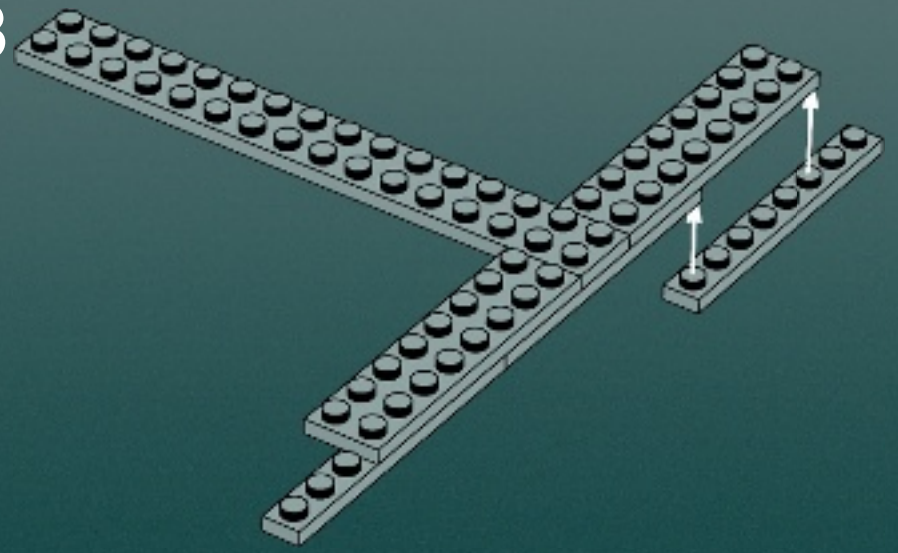

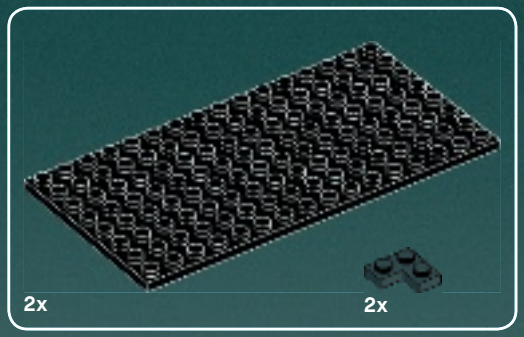

4

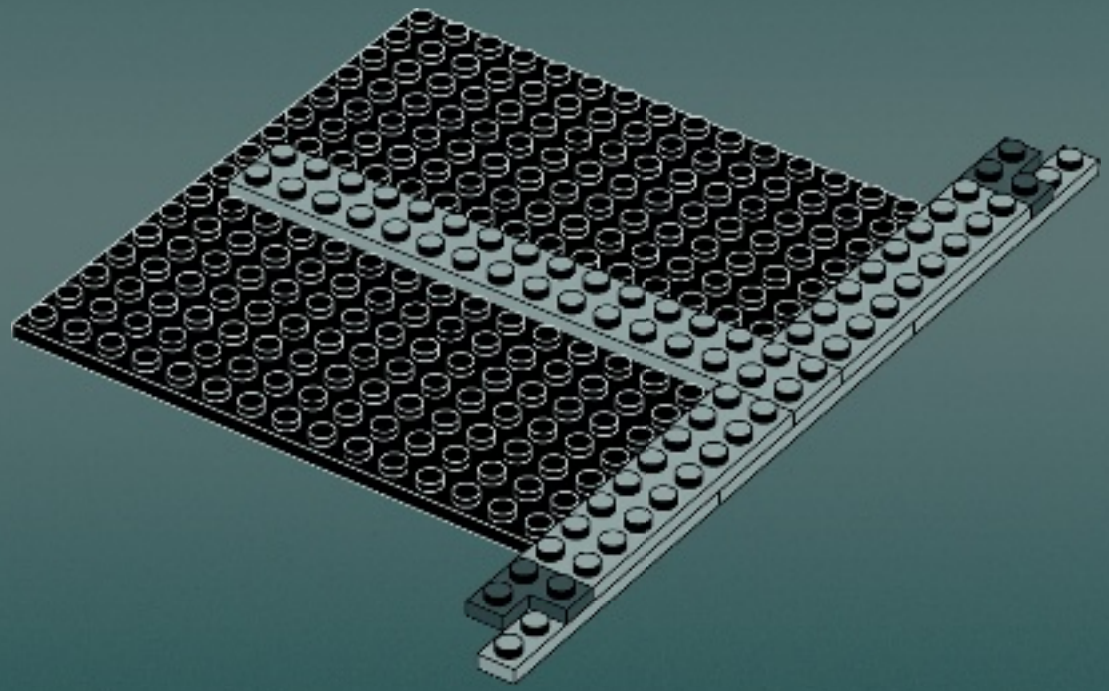

5

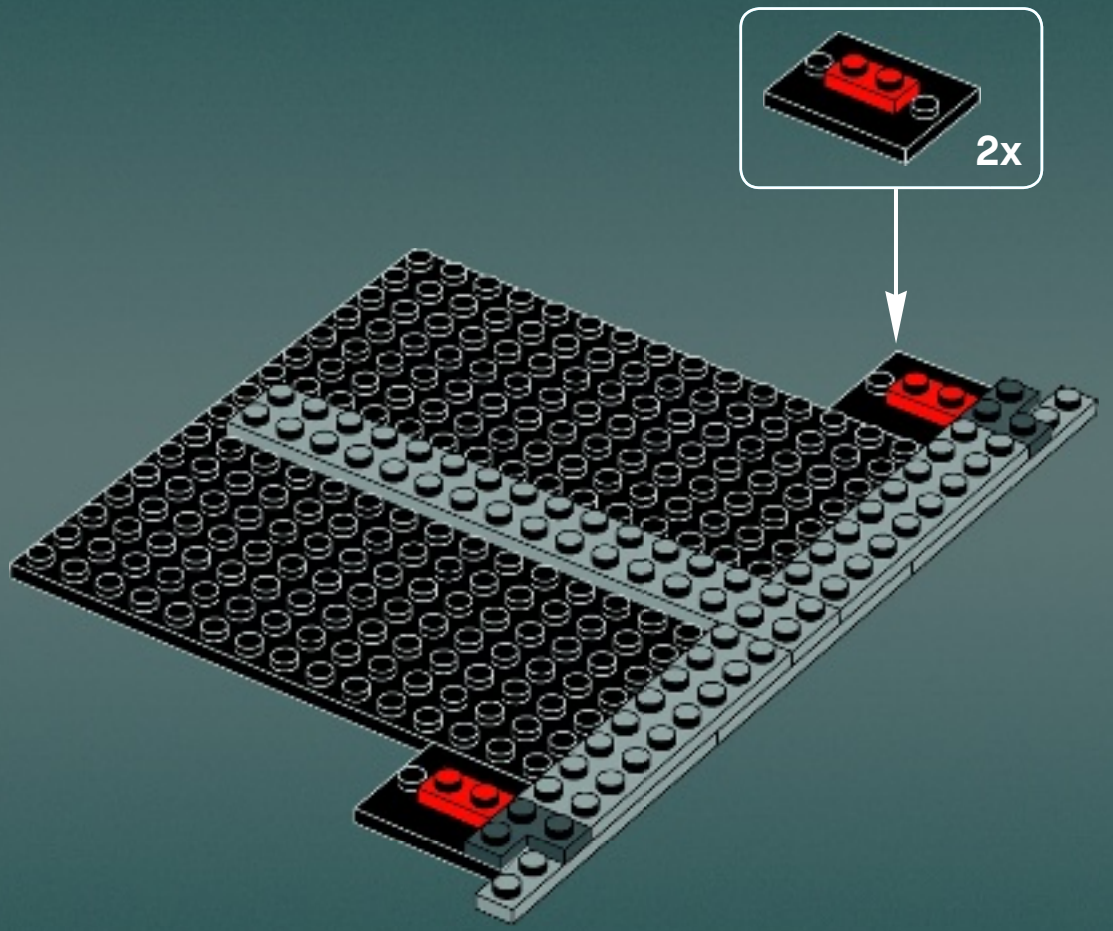

6

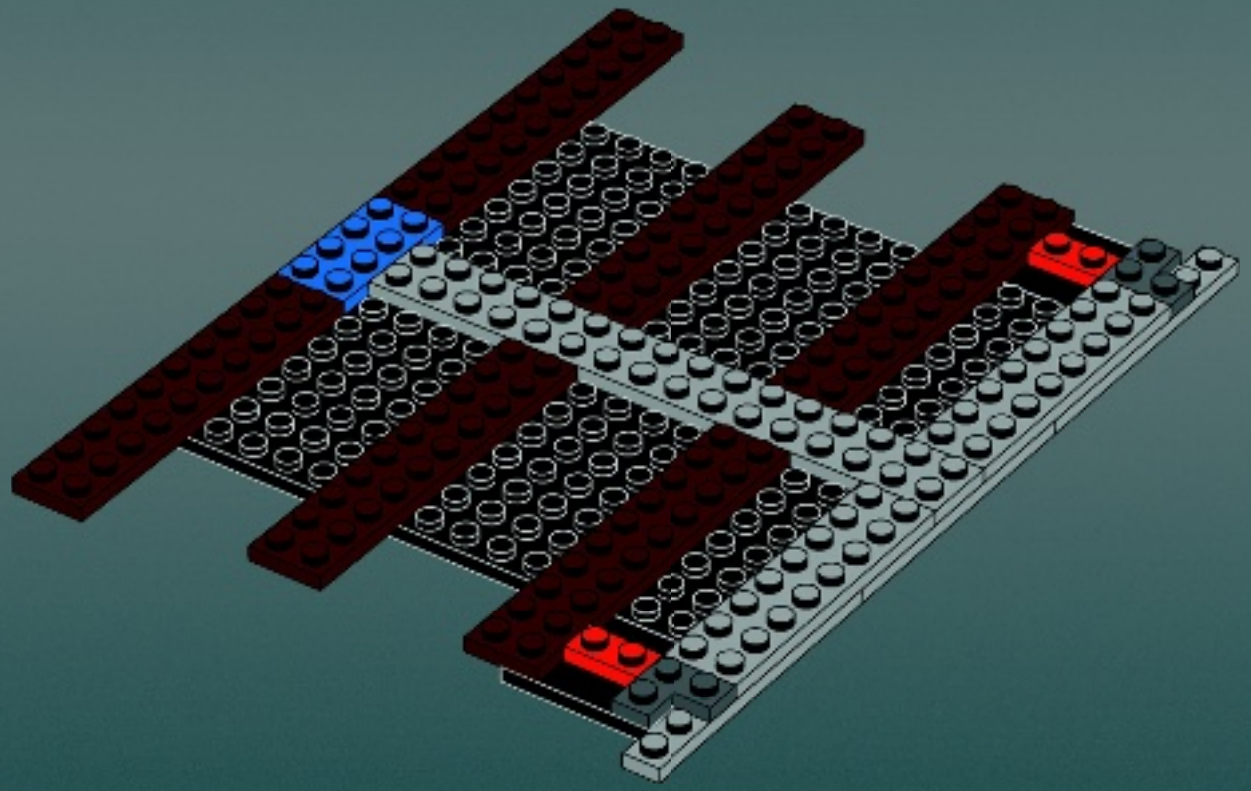

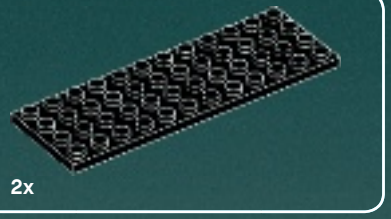

7

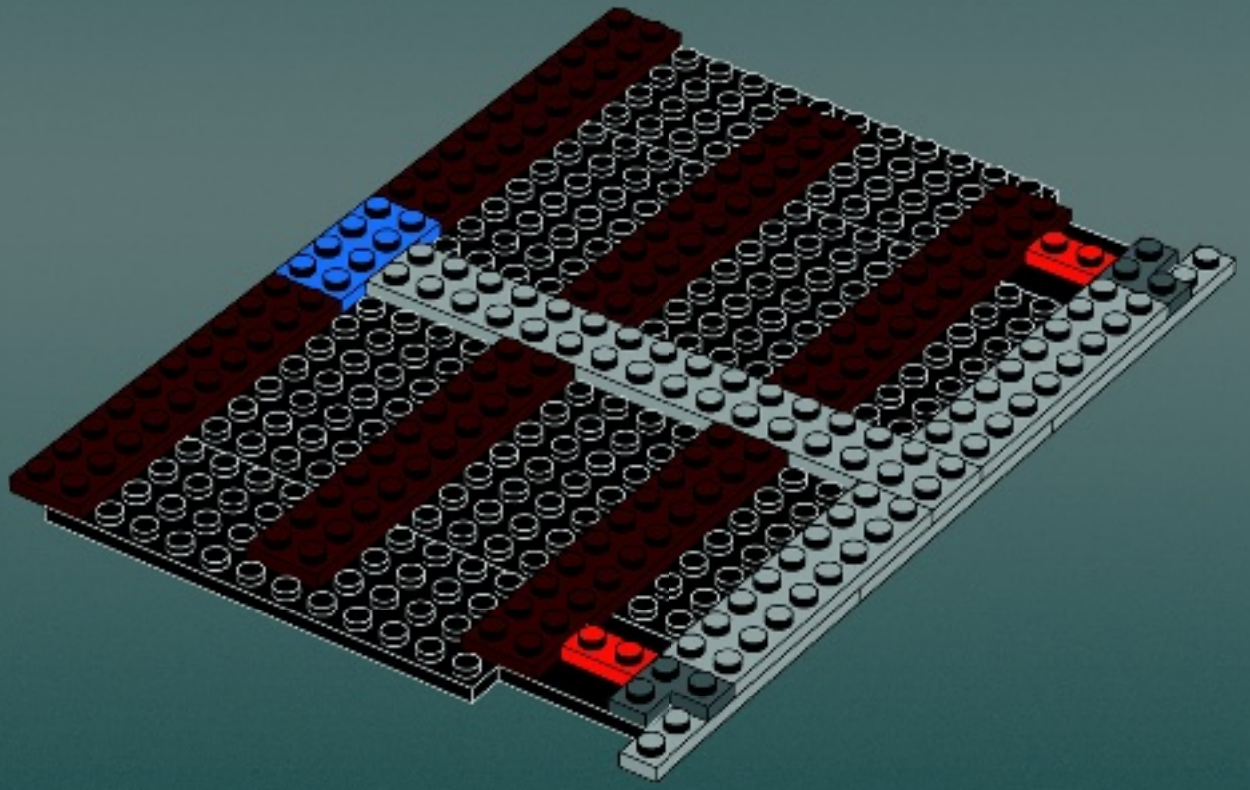

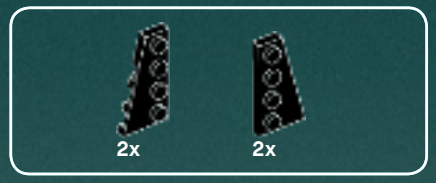

8

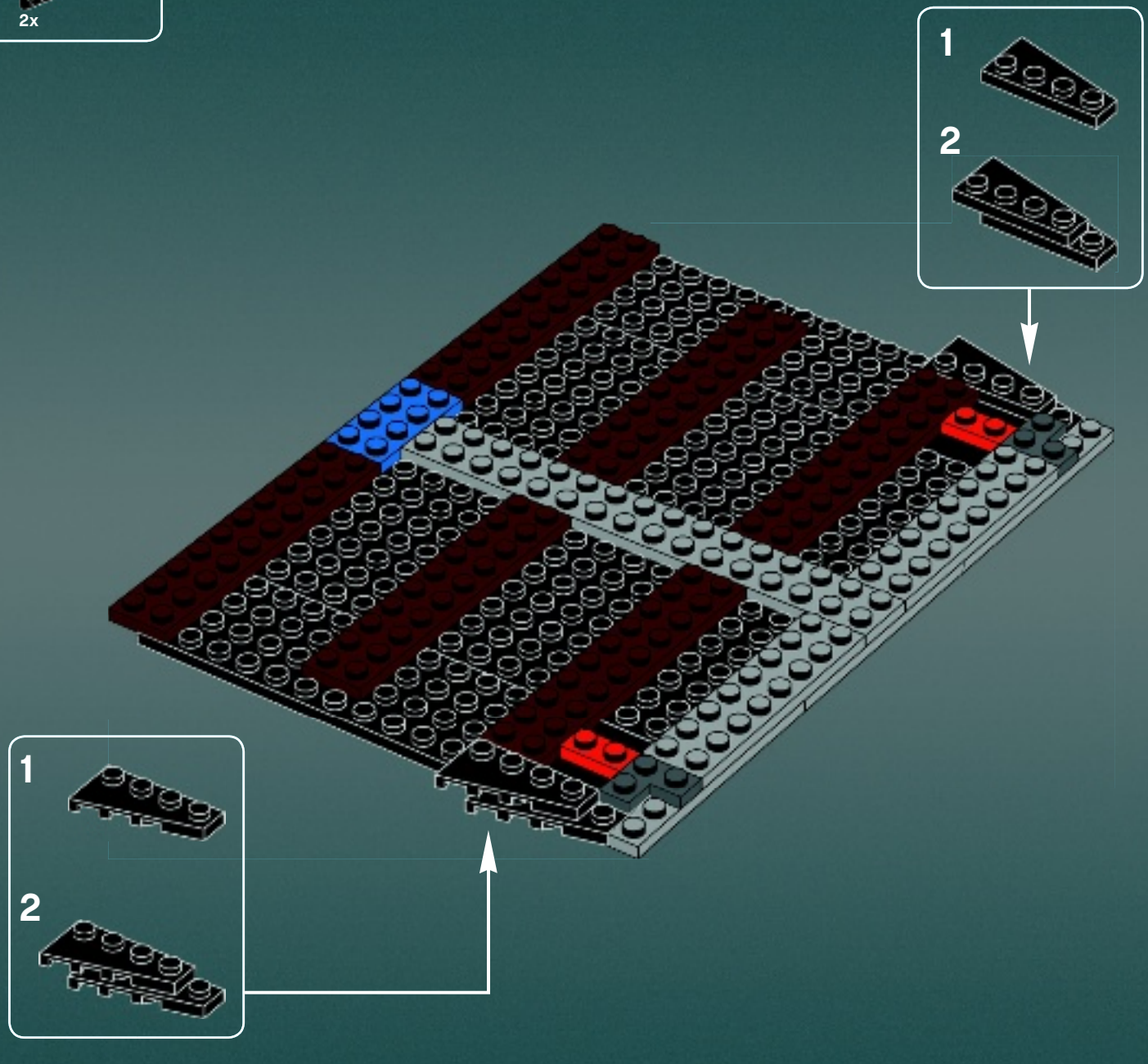

2x

9

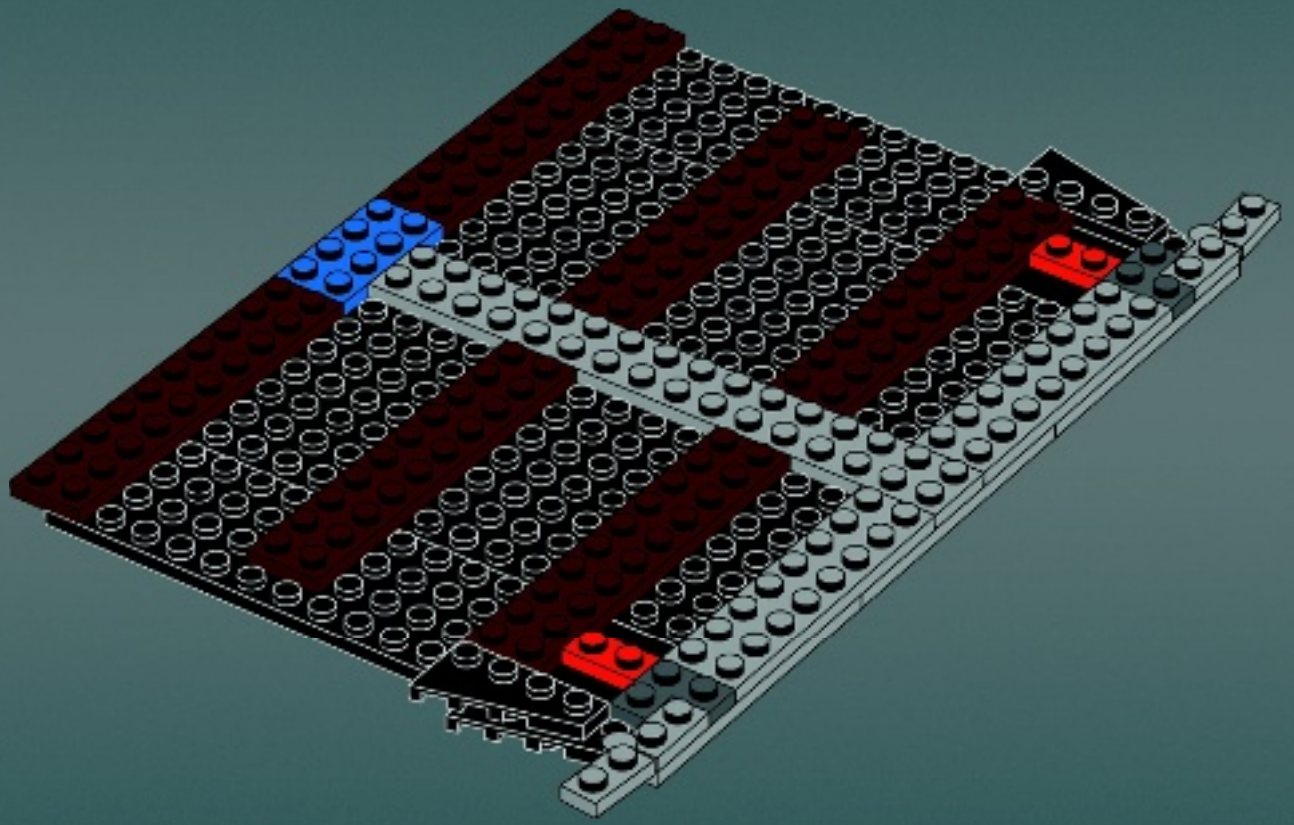

4x

10

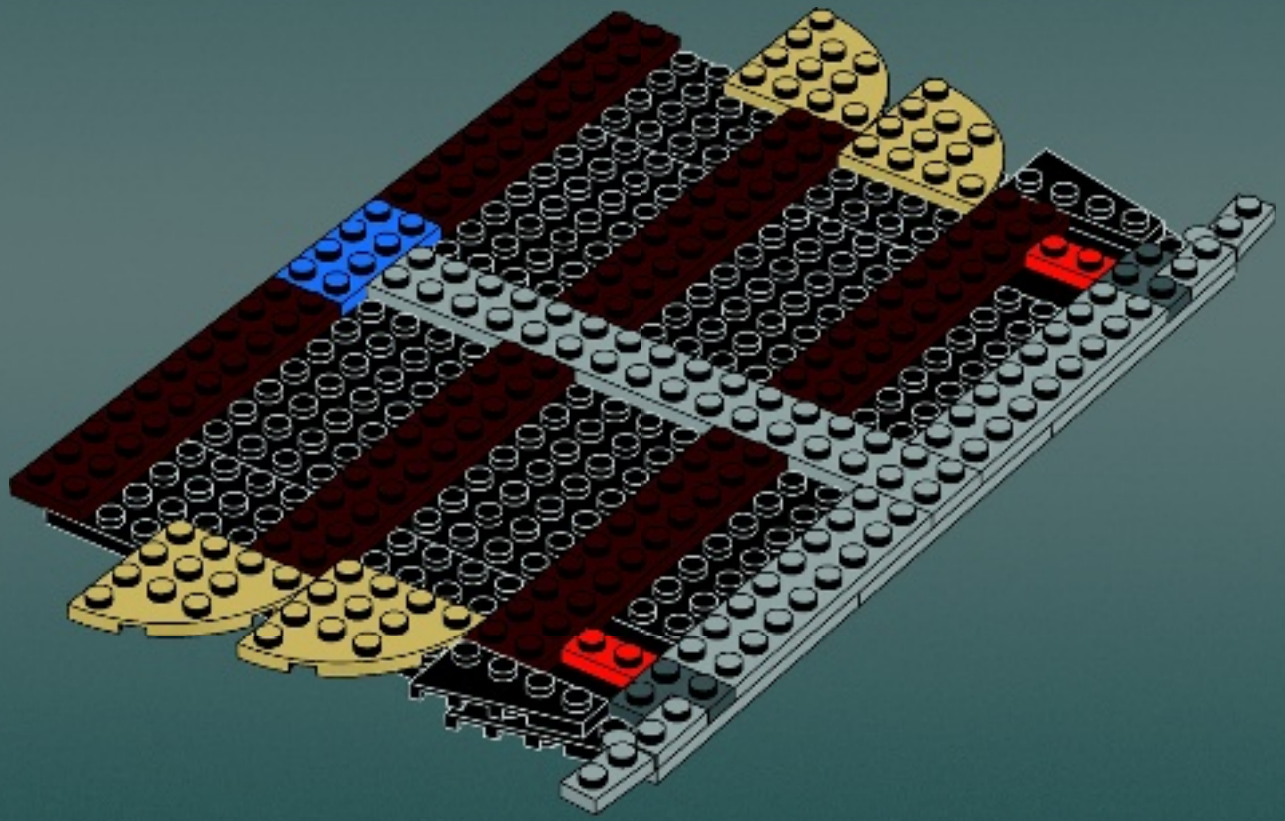

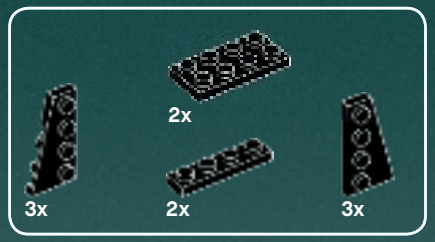

11

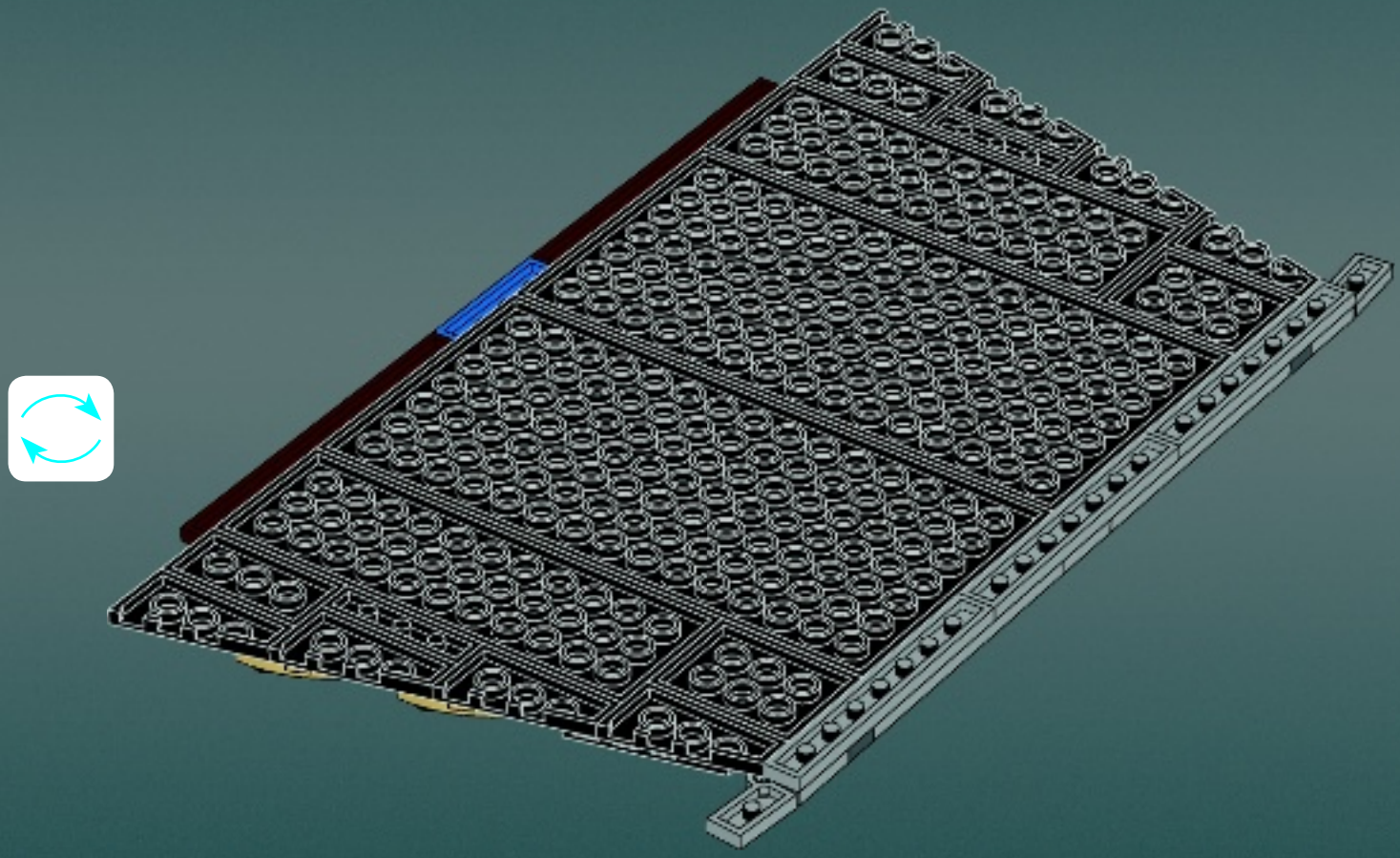

12

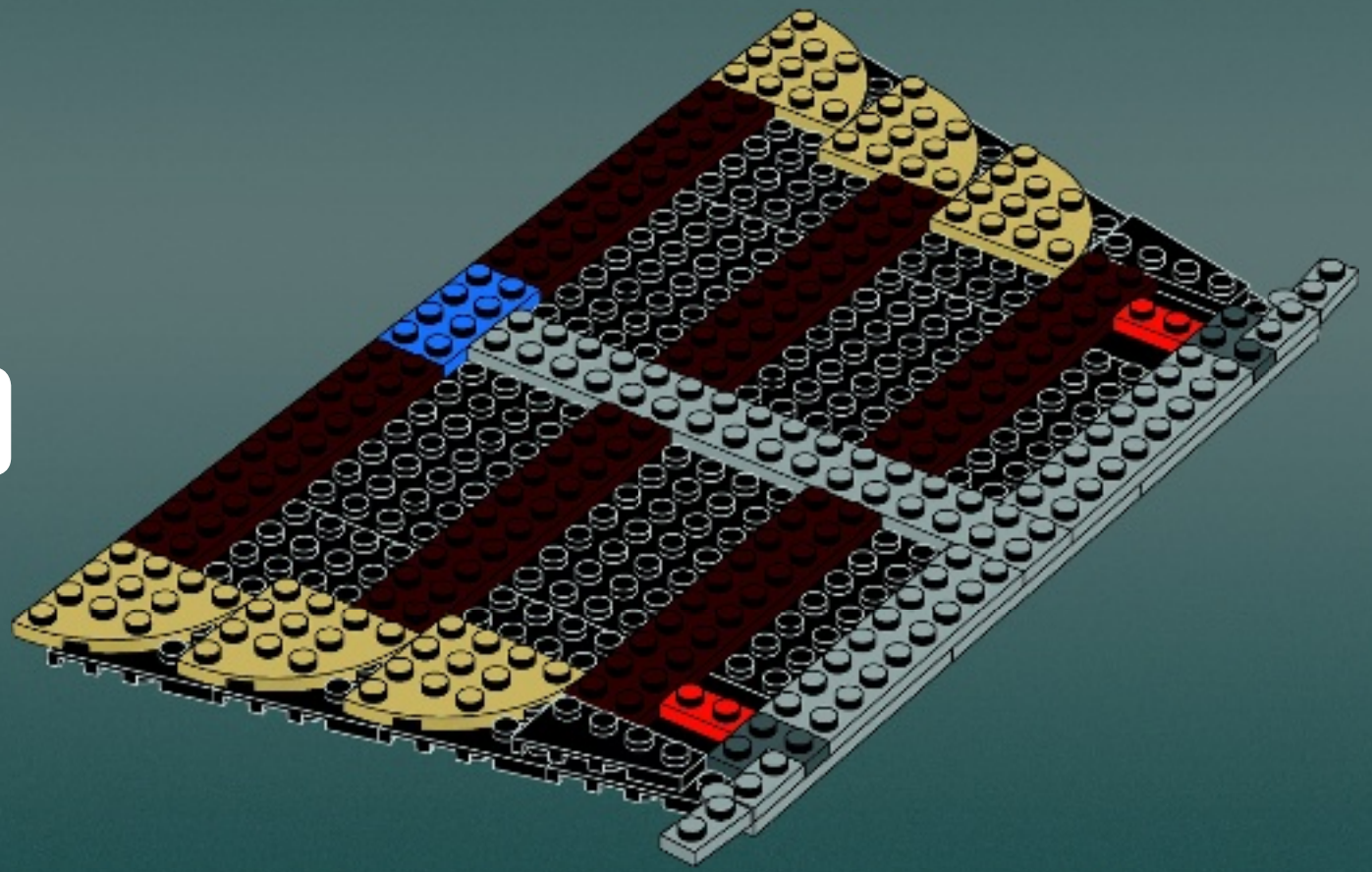

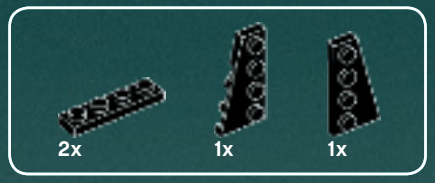

13

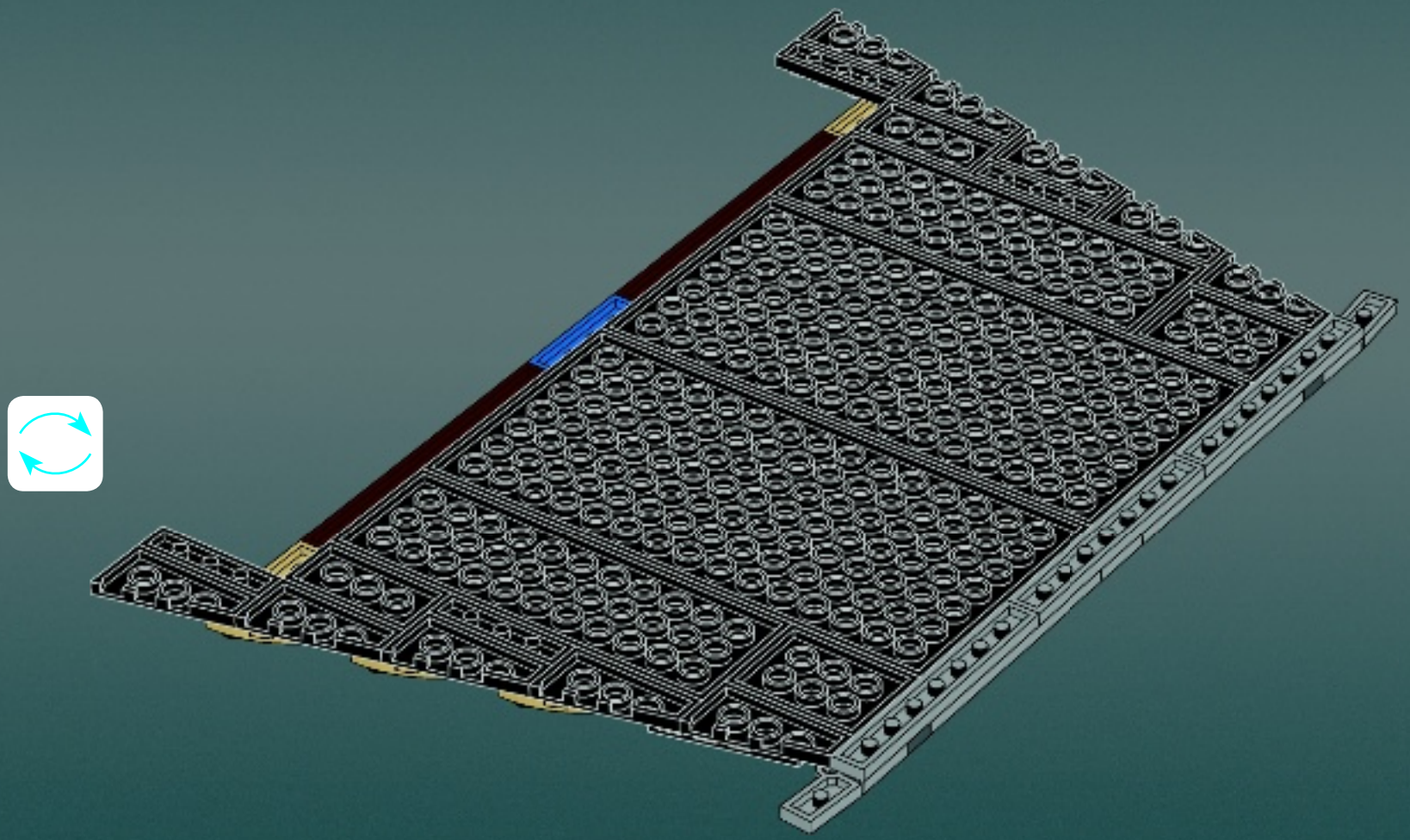

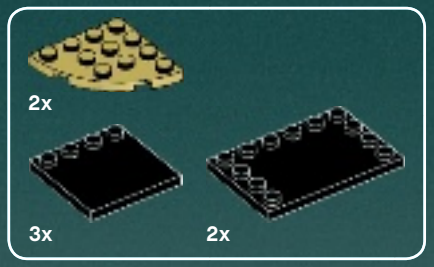

14

15

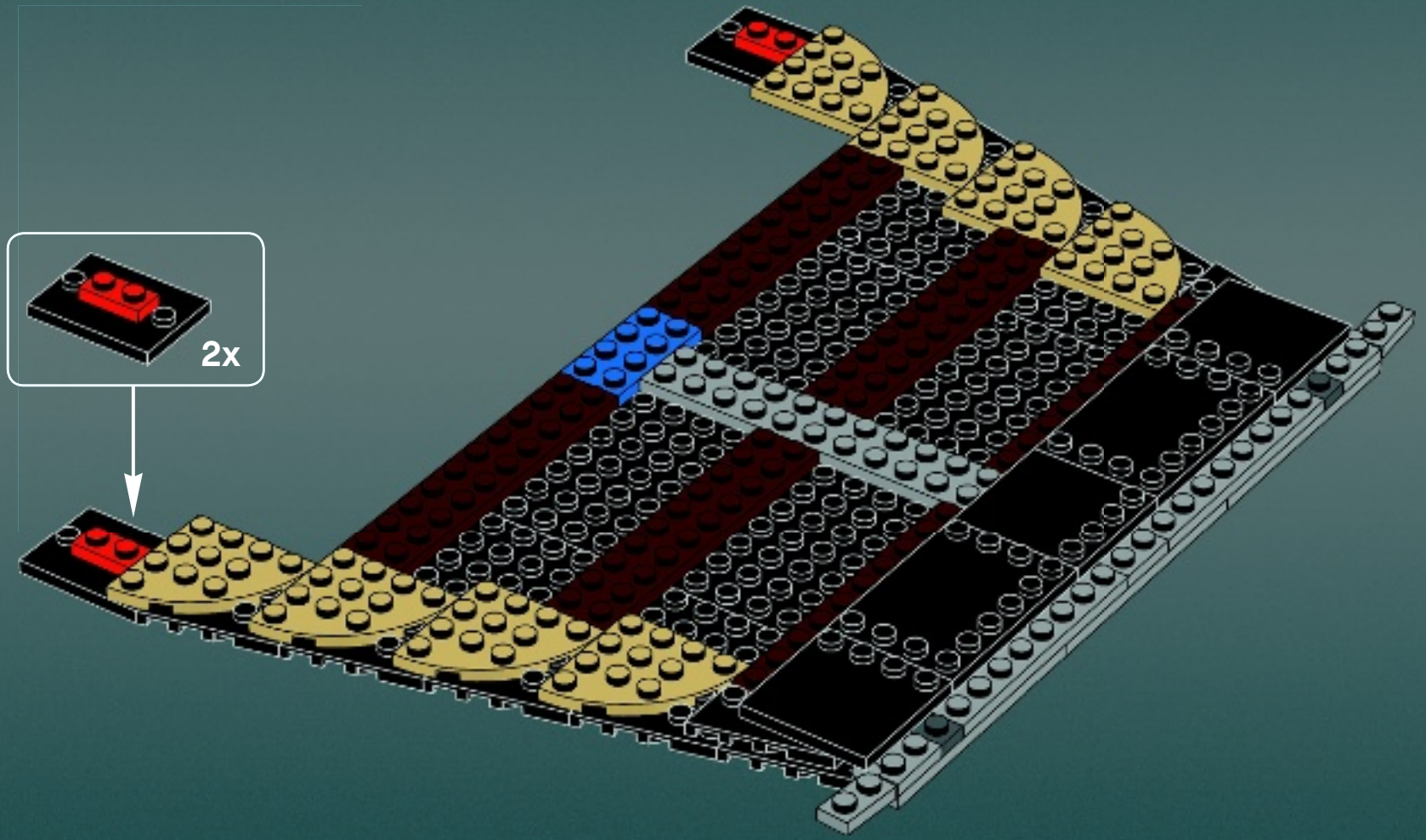

16

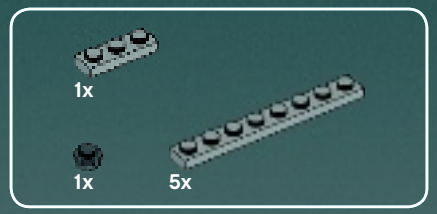

1

2

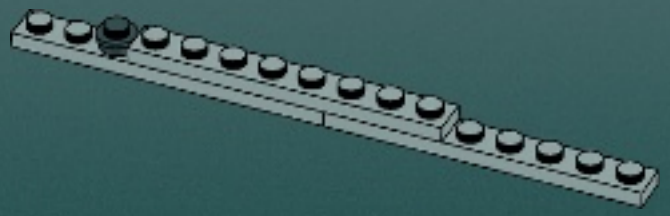

3

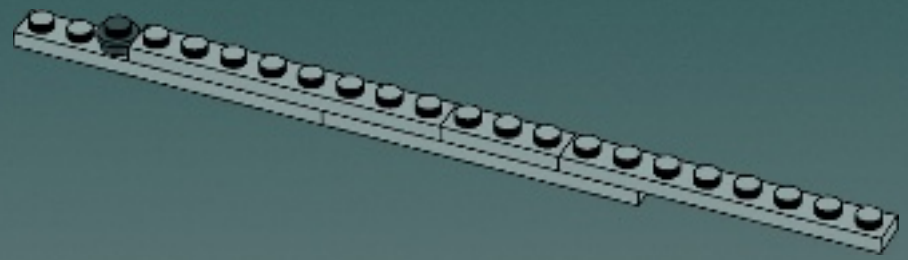

4

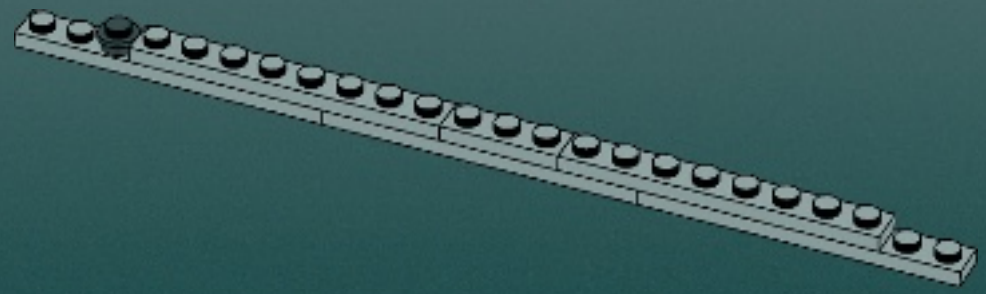

2x

17

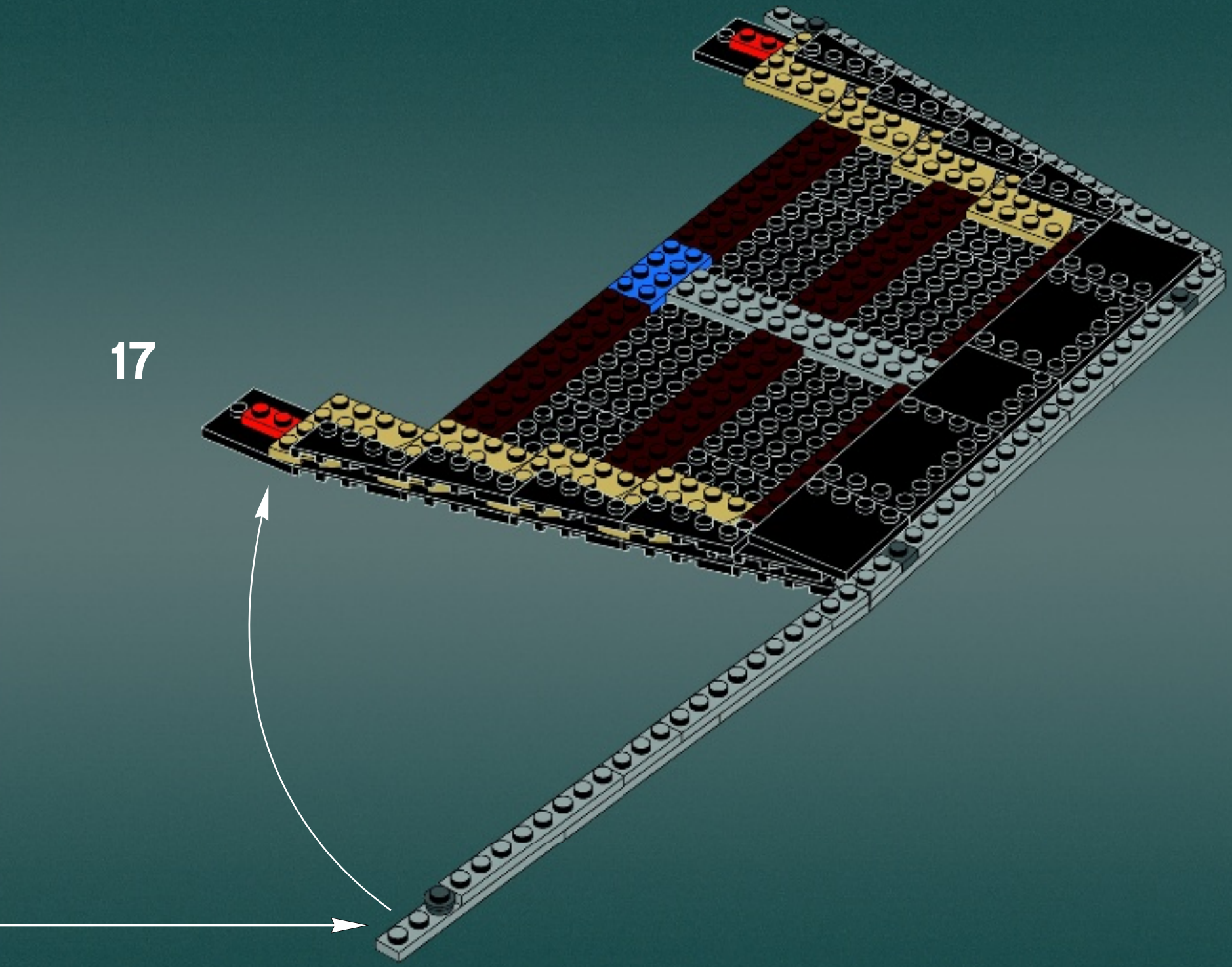

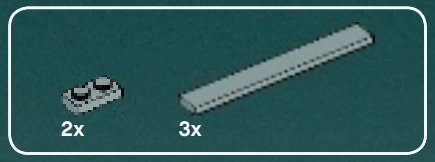

18

19

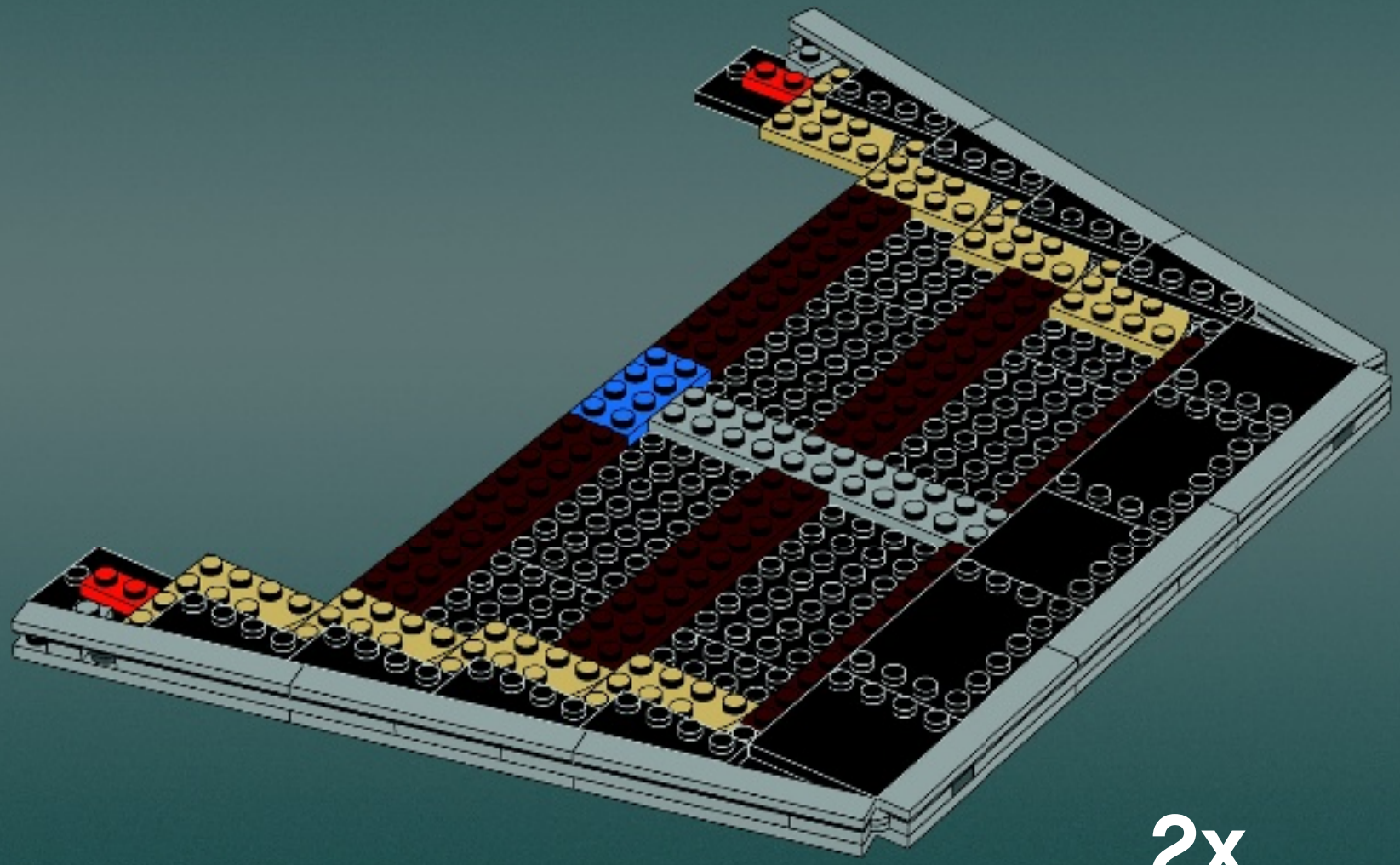

2x

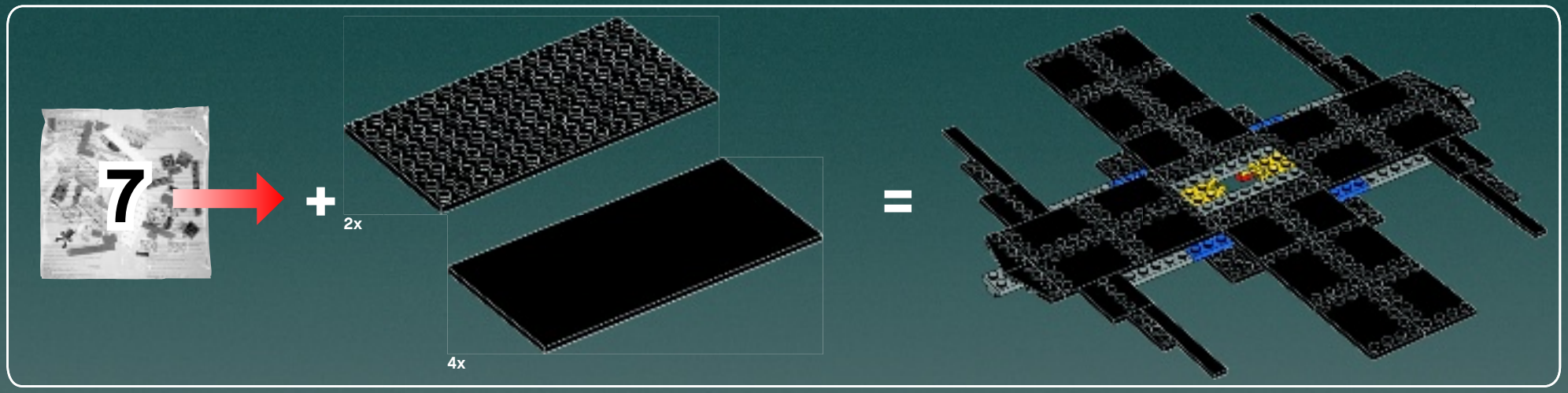

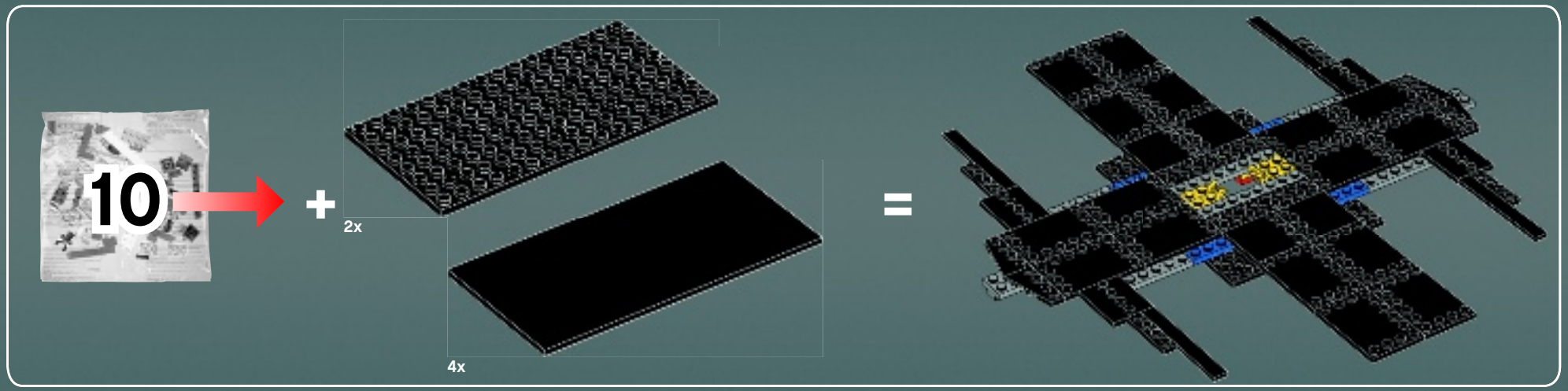

1

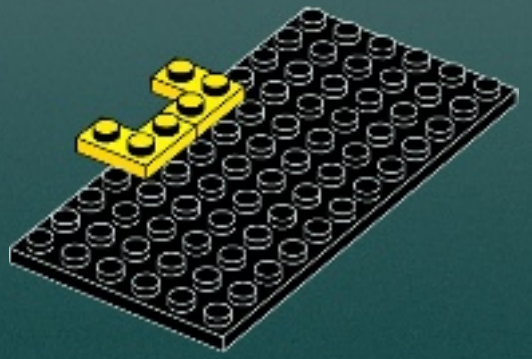

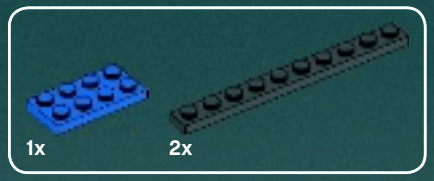

2

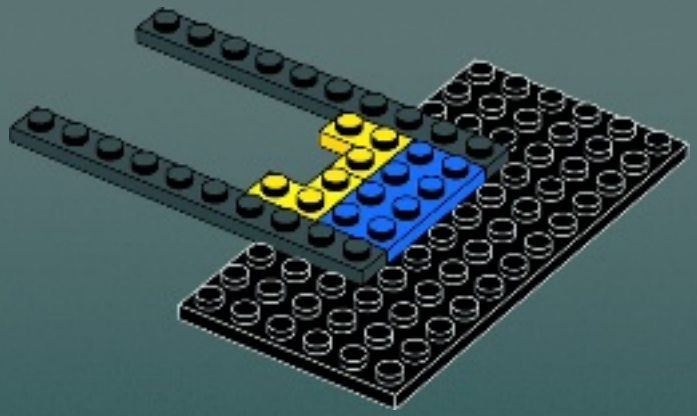

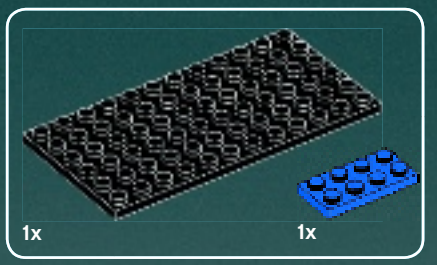

3

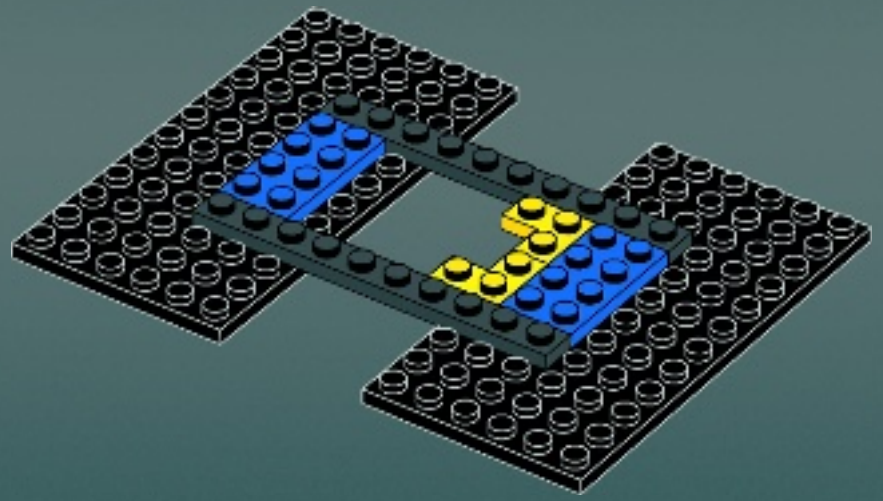

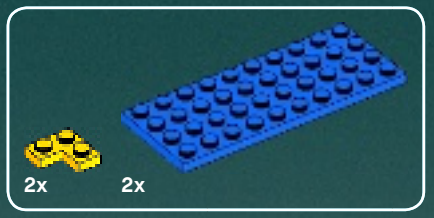

4

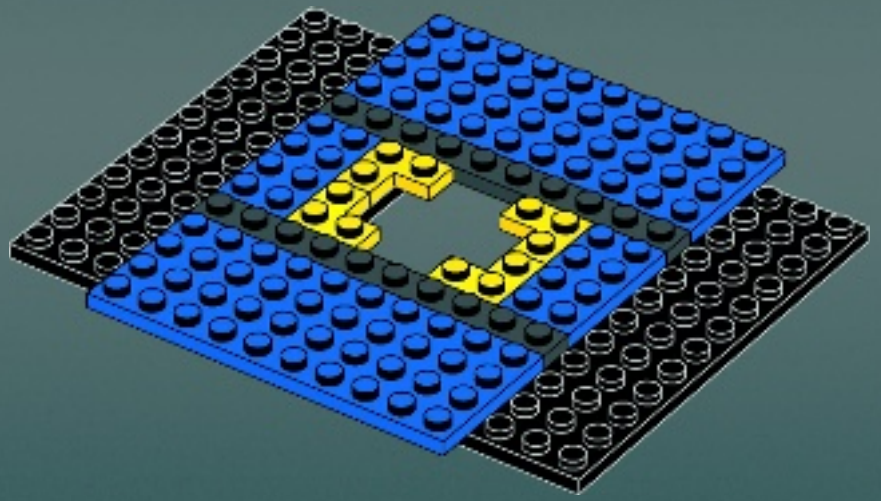

5

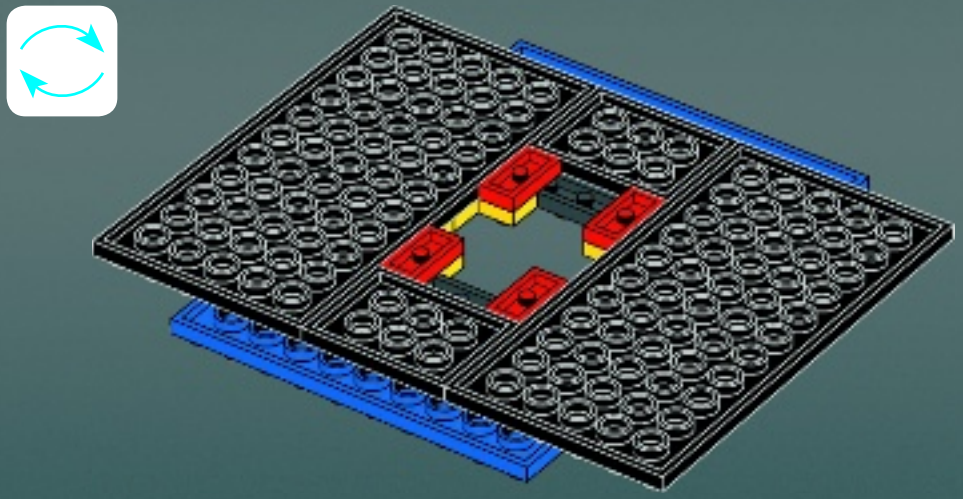

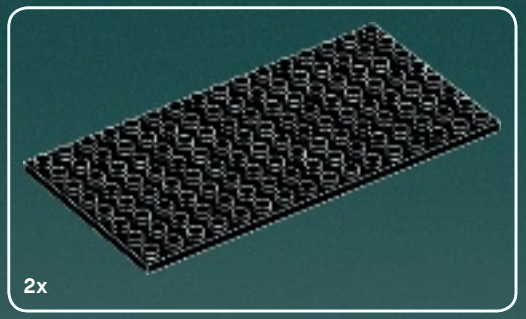

6

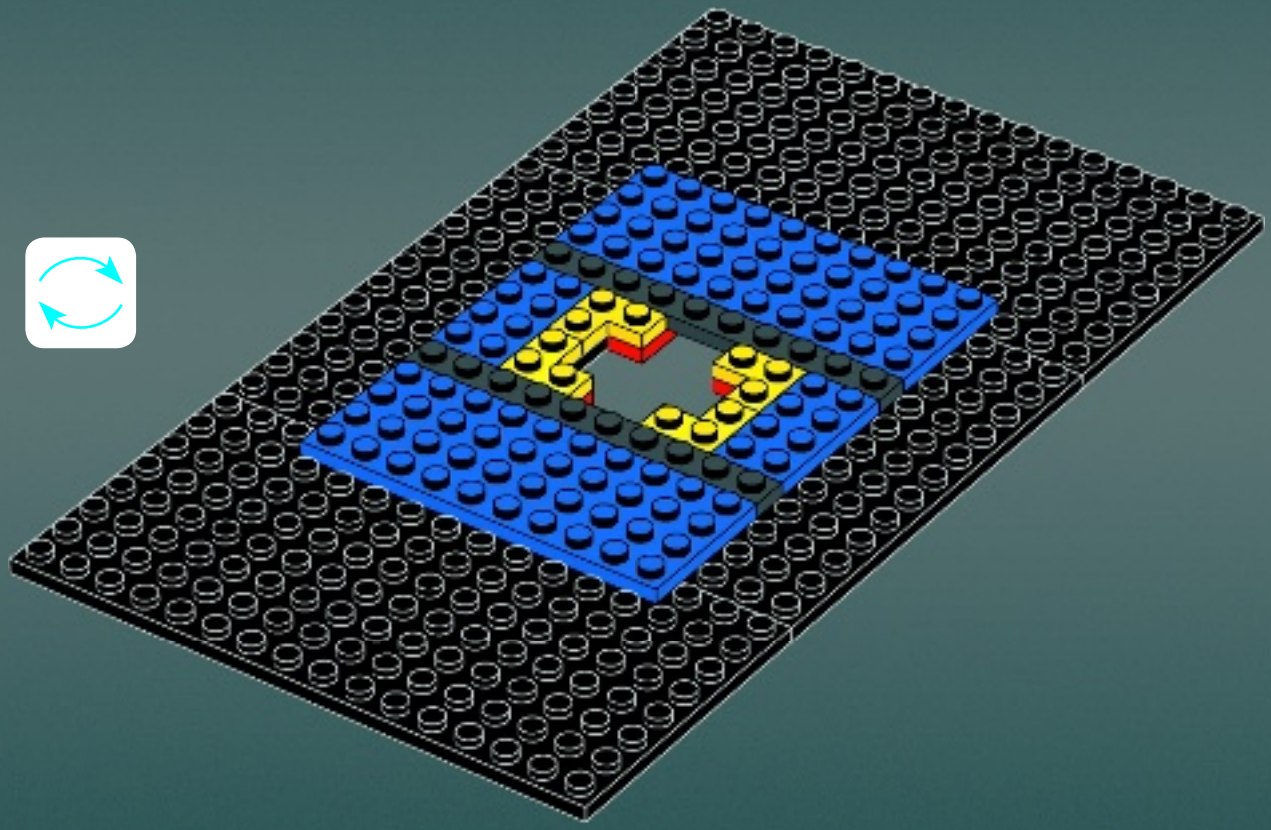

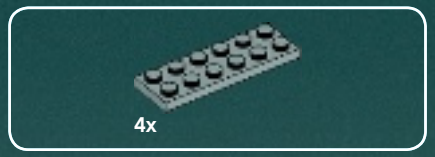

7

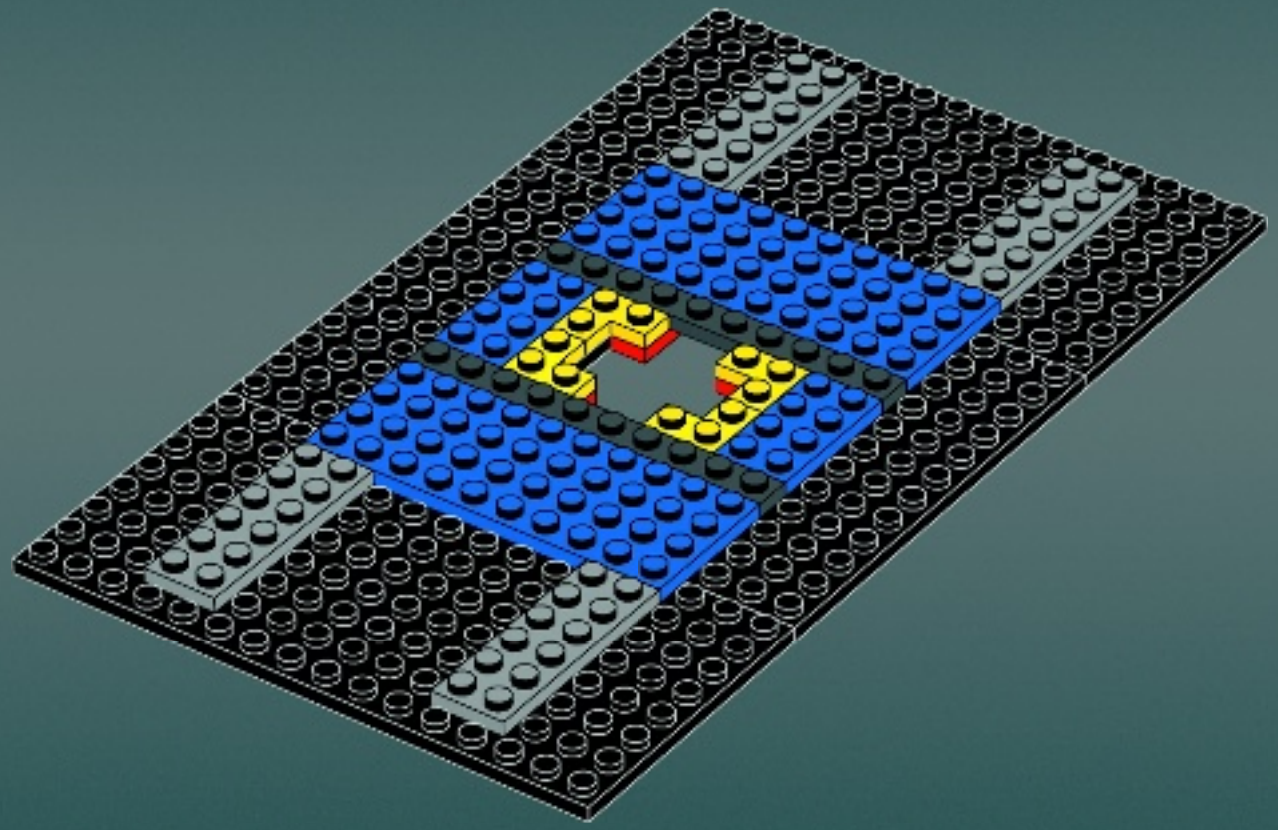

20

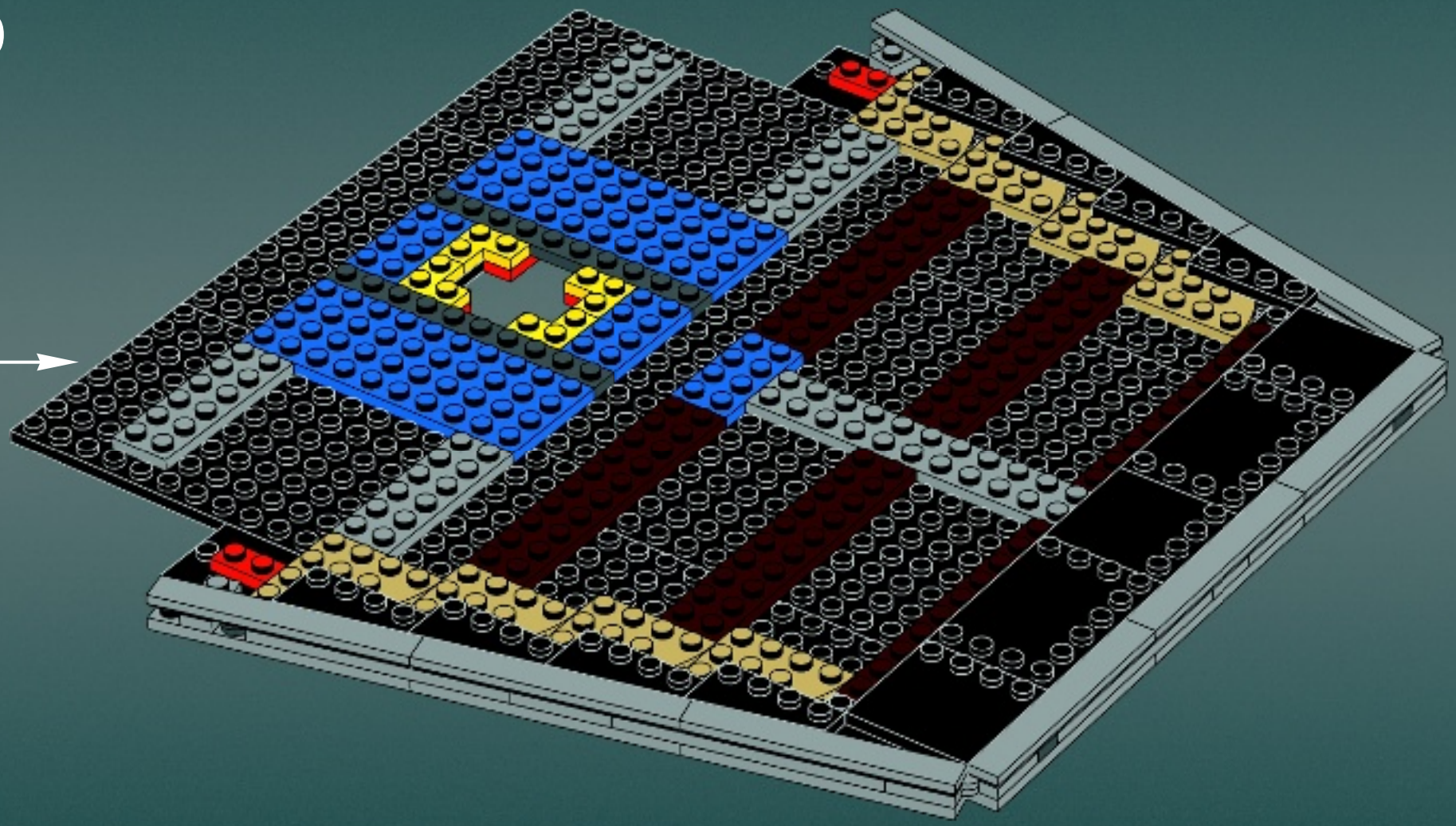

21

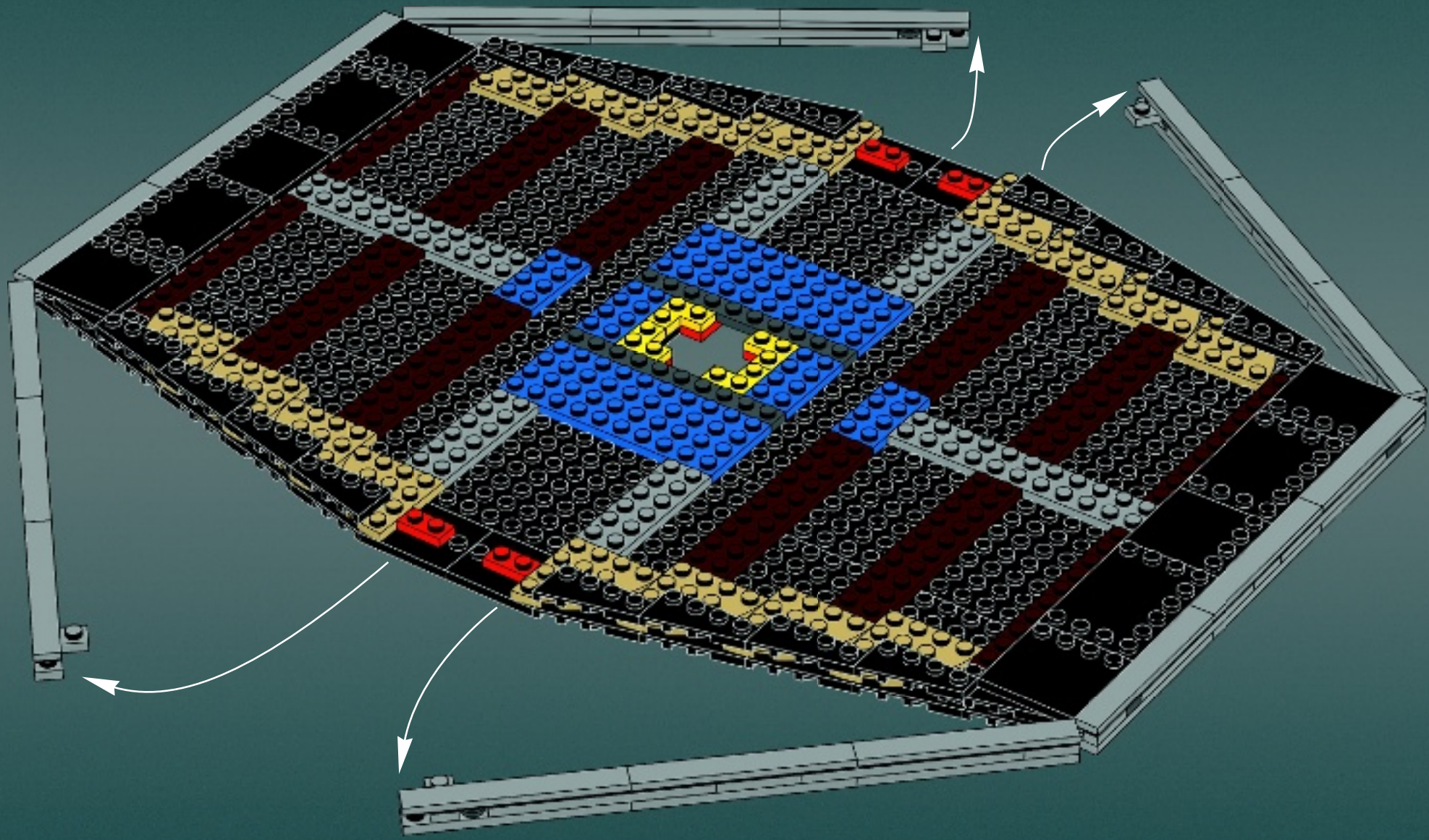

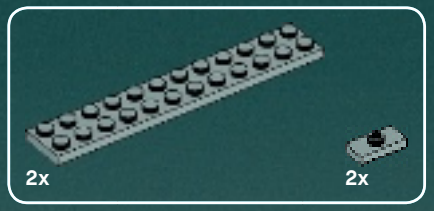

22

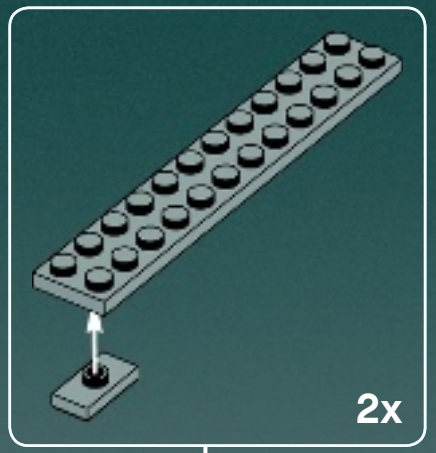

23

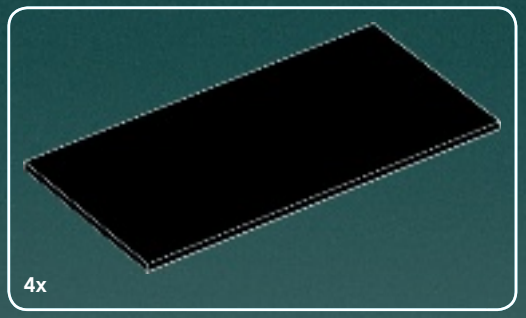

24

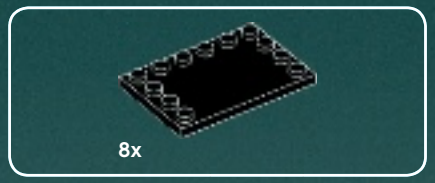

25

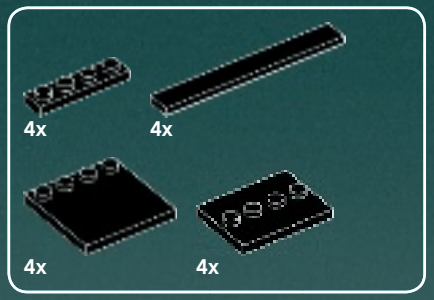

26

8x

27

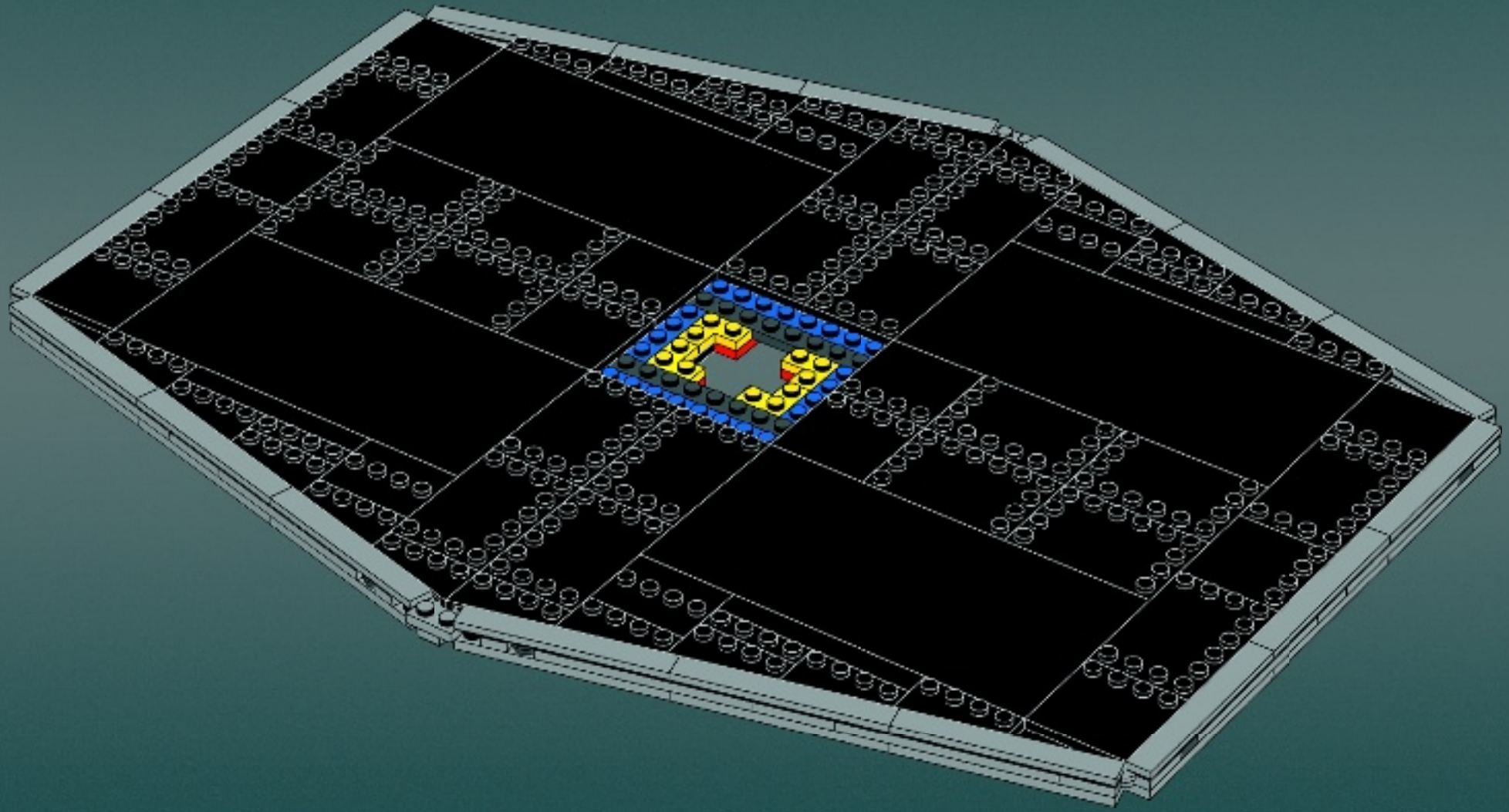

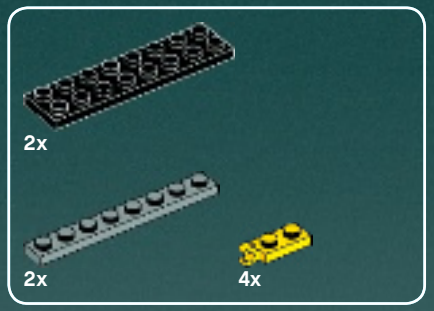

28

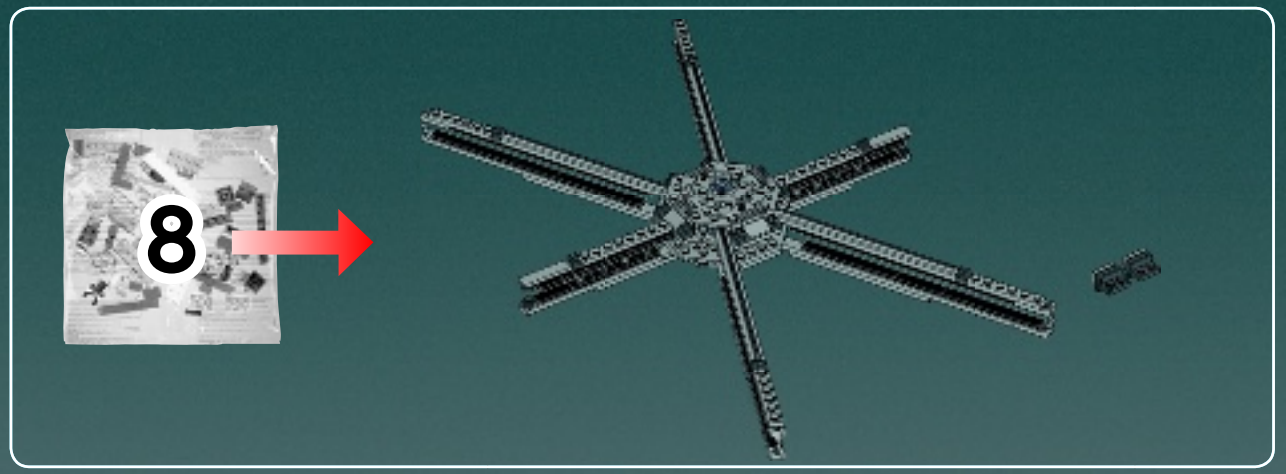
8

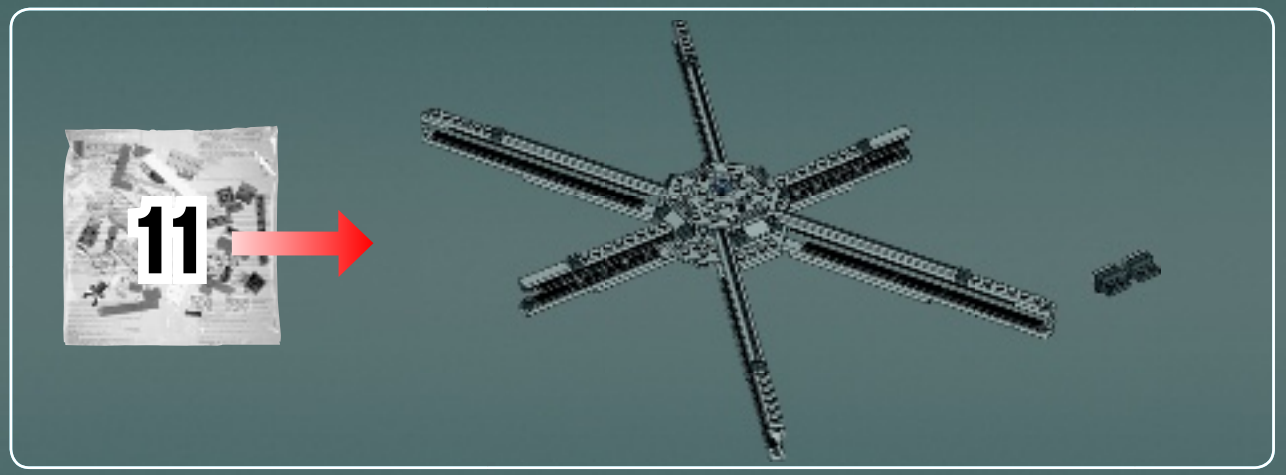
11

29

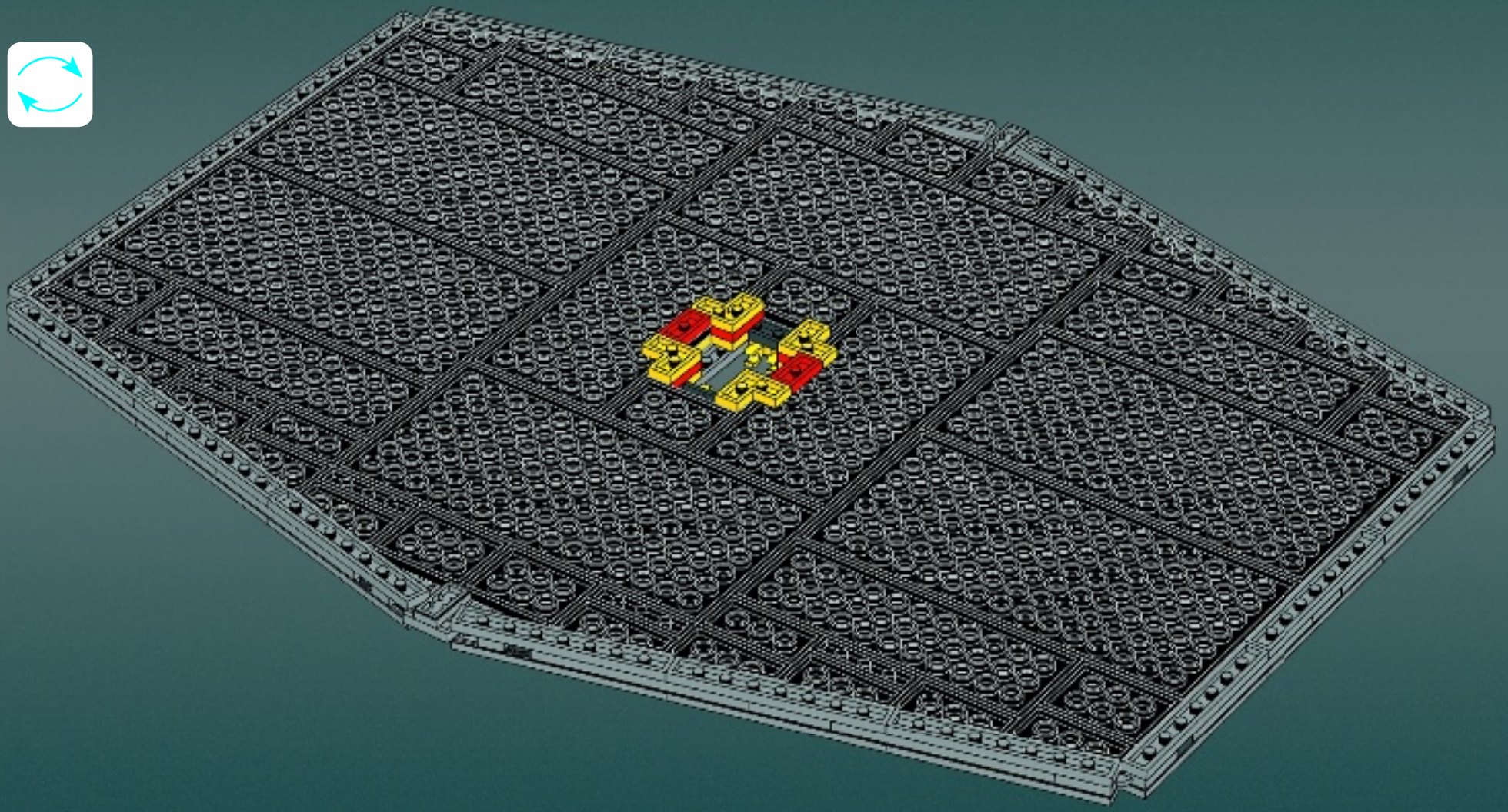

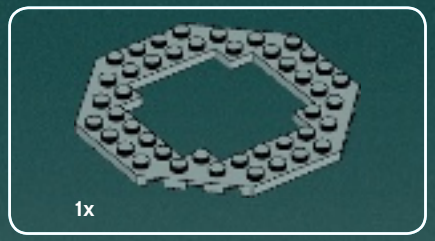

30

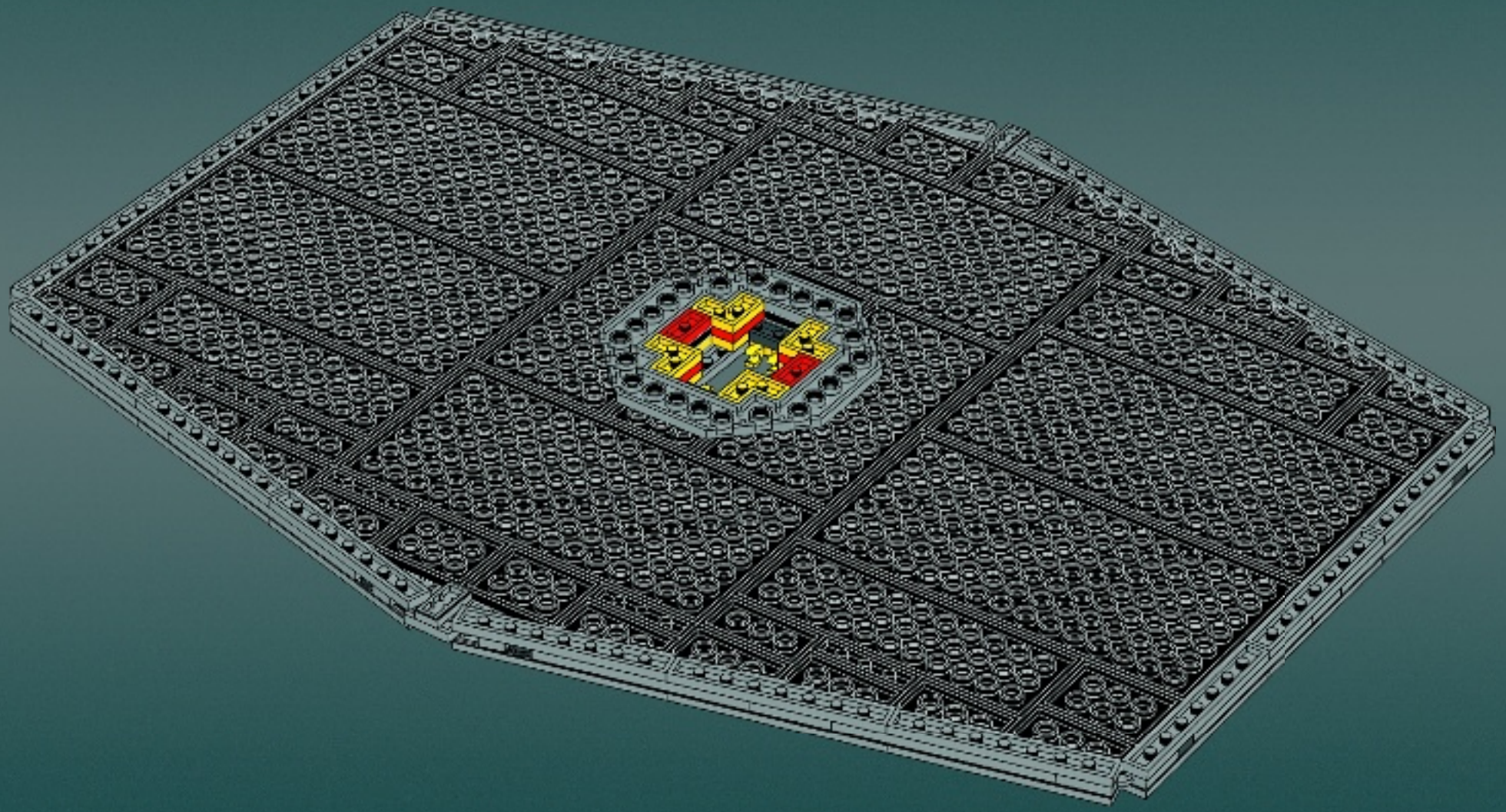

31

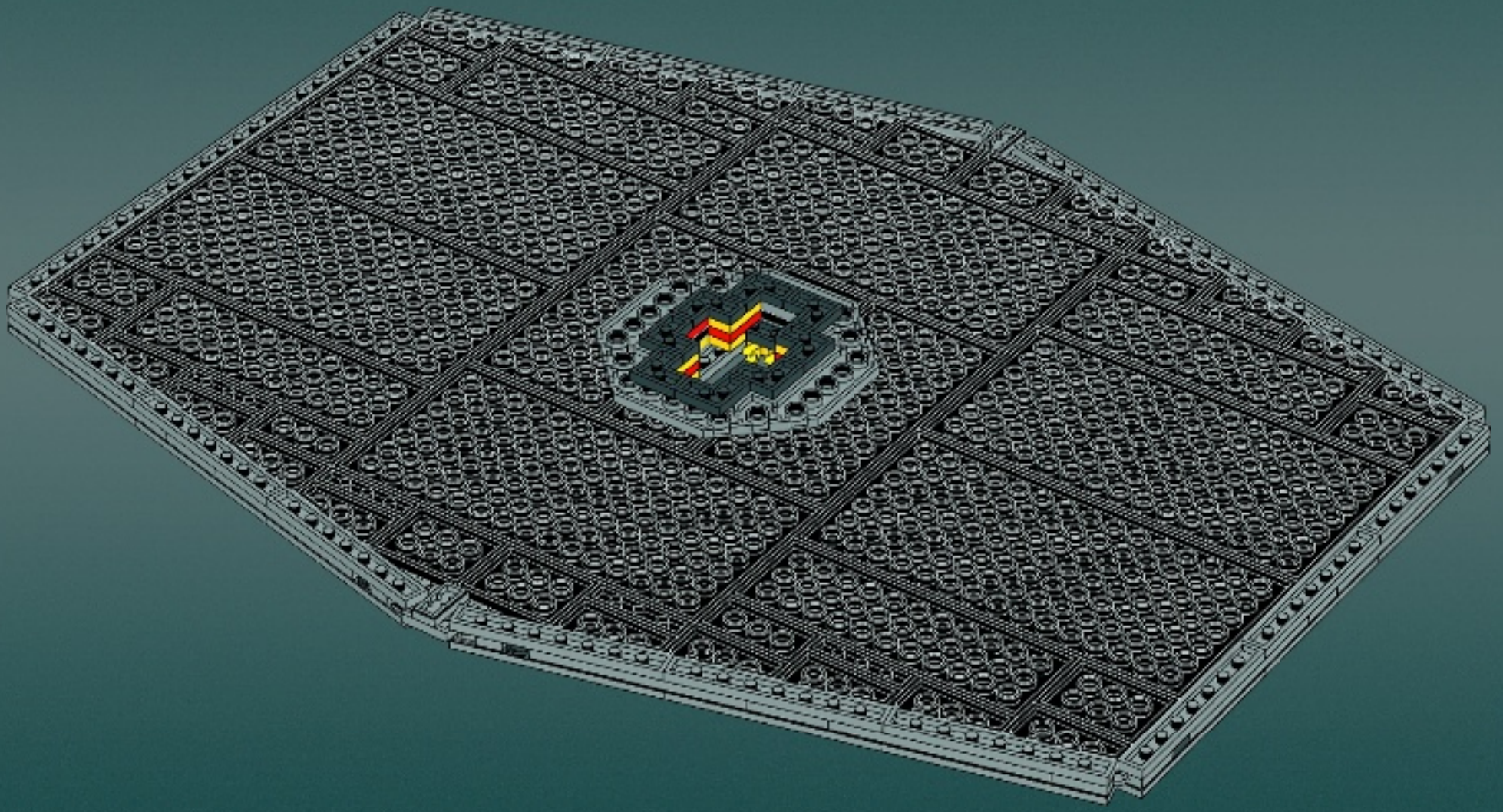

32

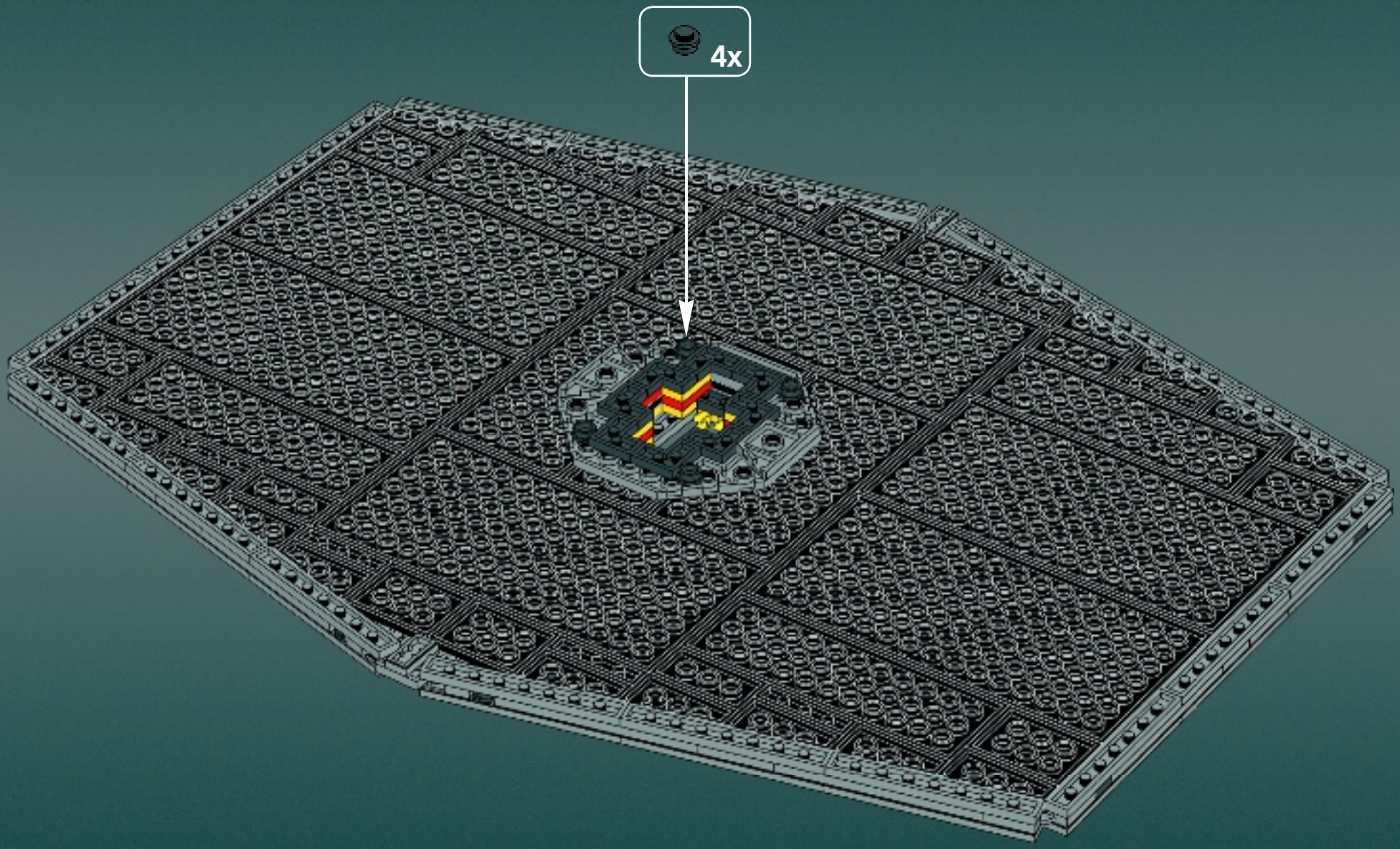

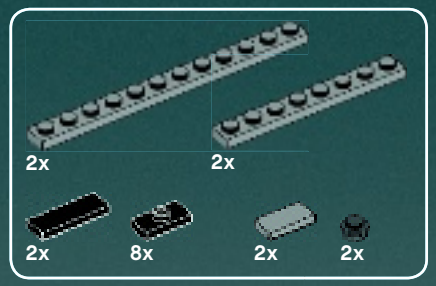

33

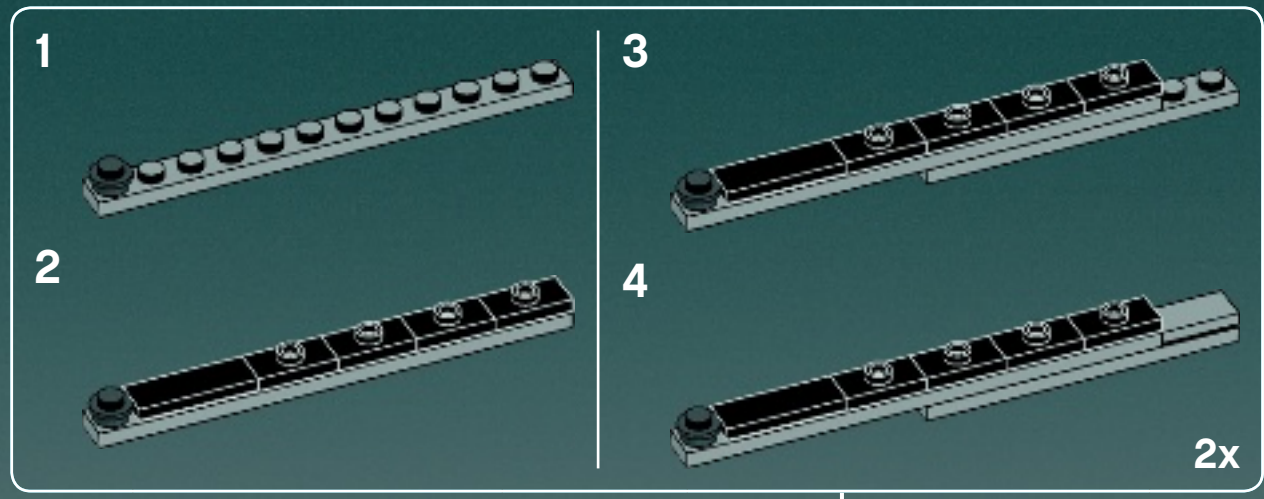

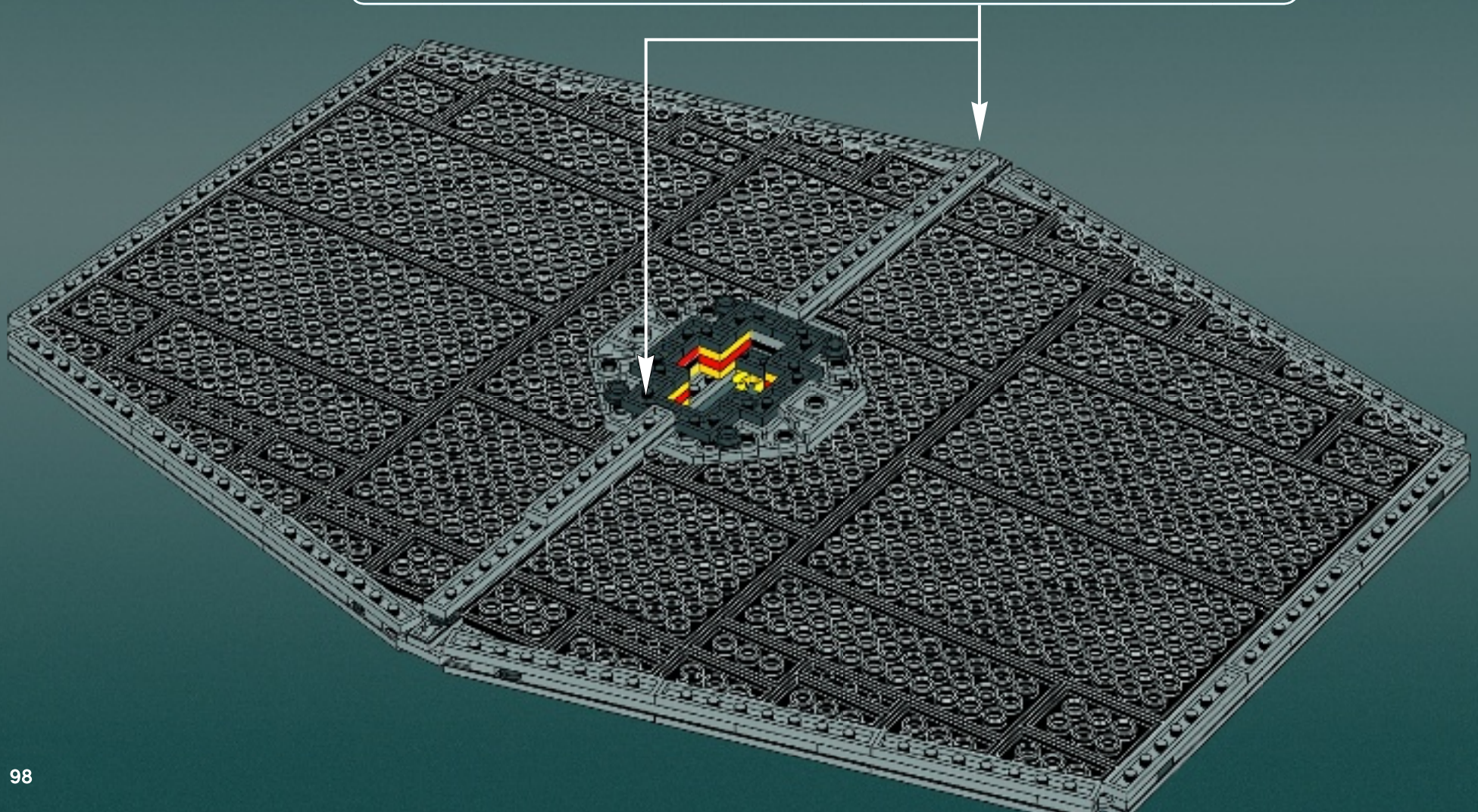

1

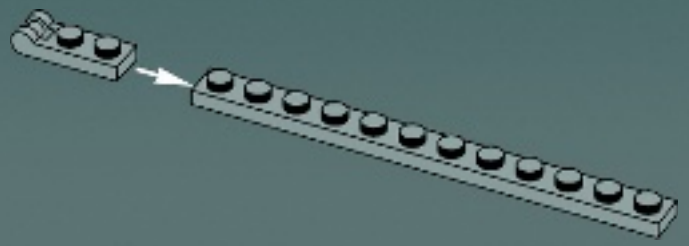

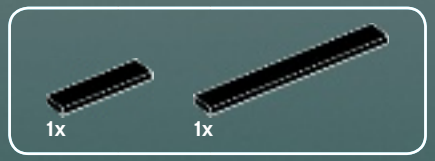

2

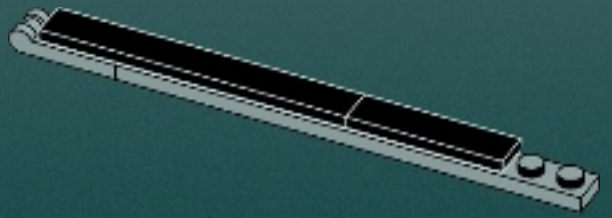

3

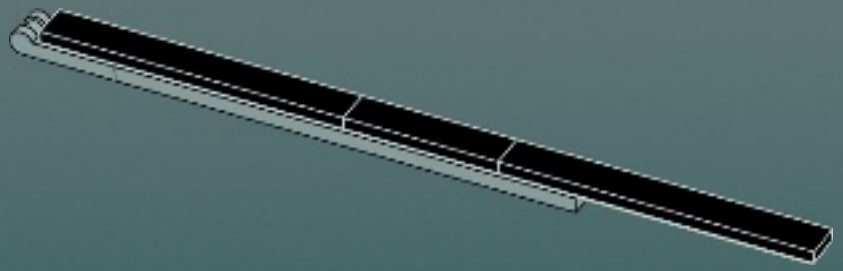

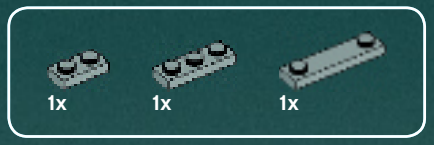

4

5

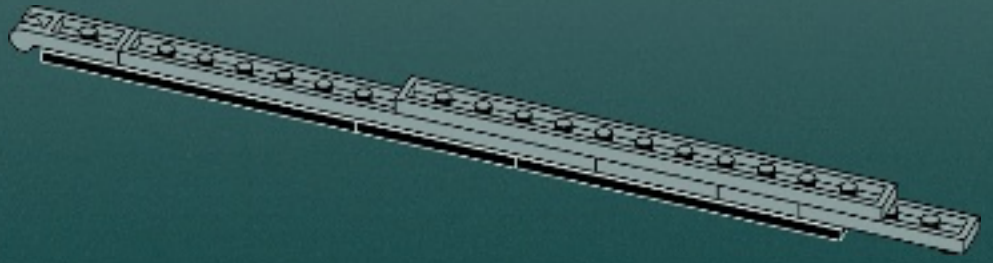

4x

34

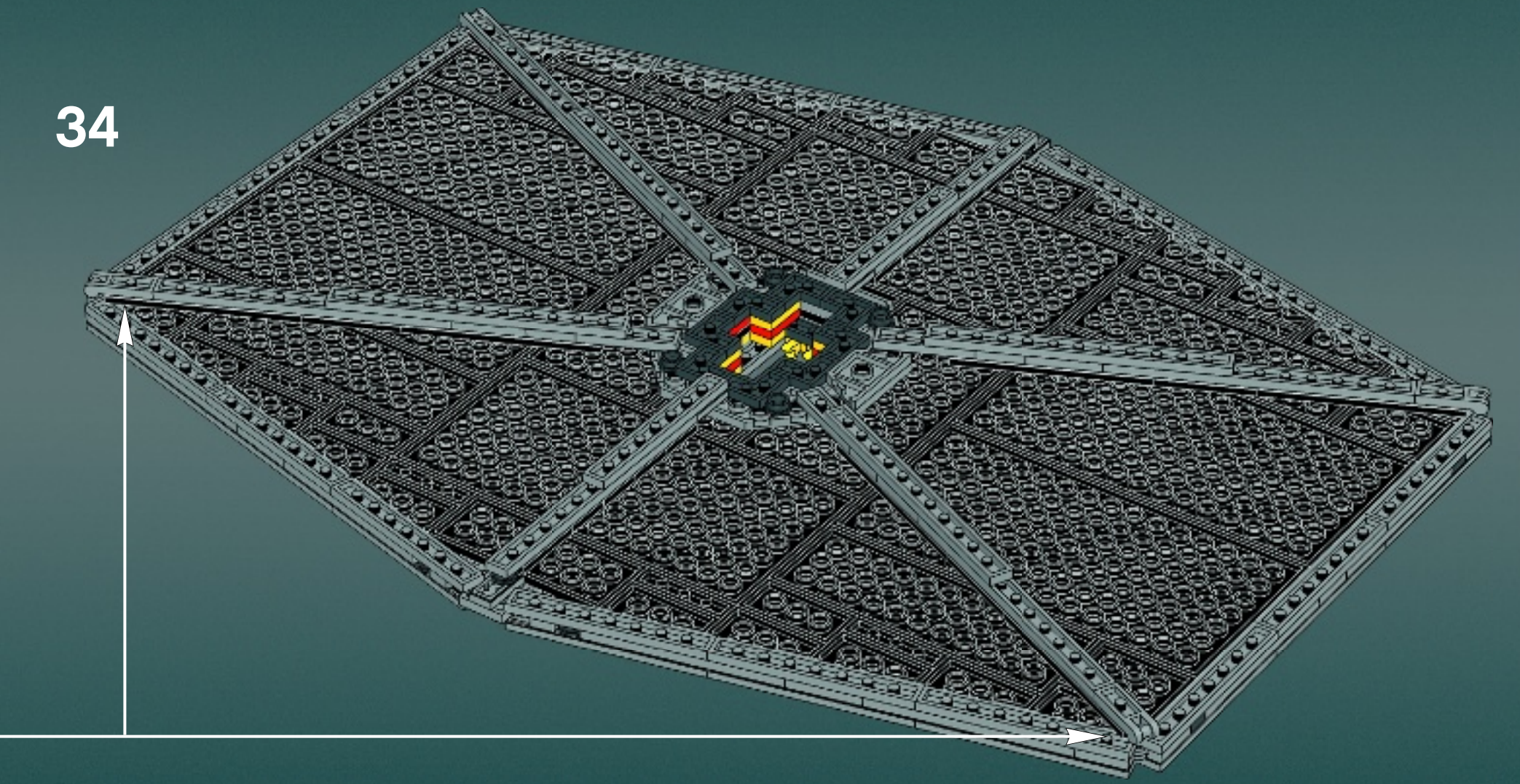

4x

35

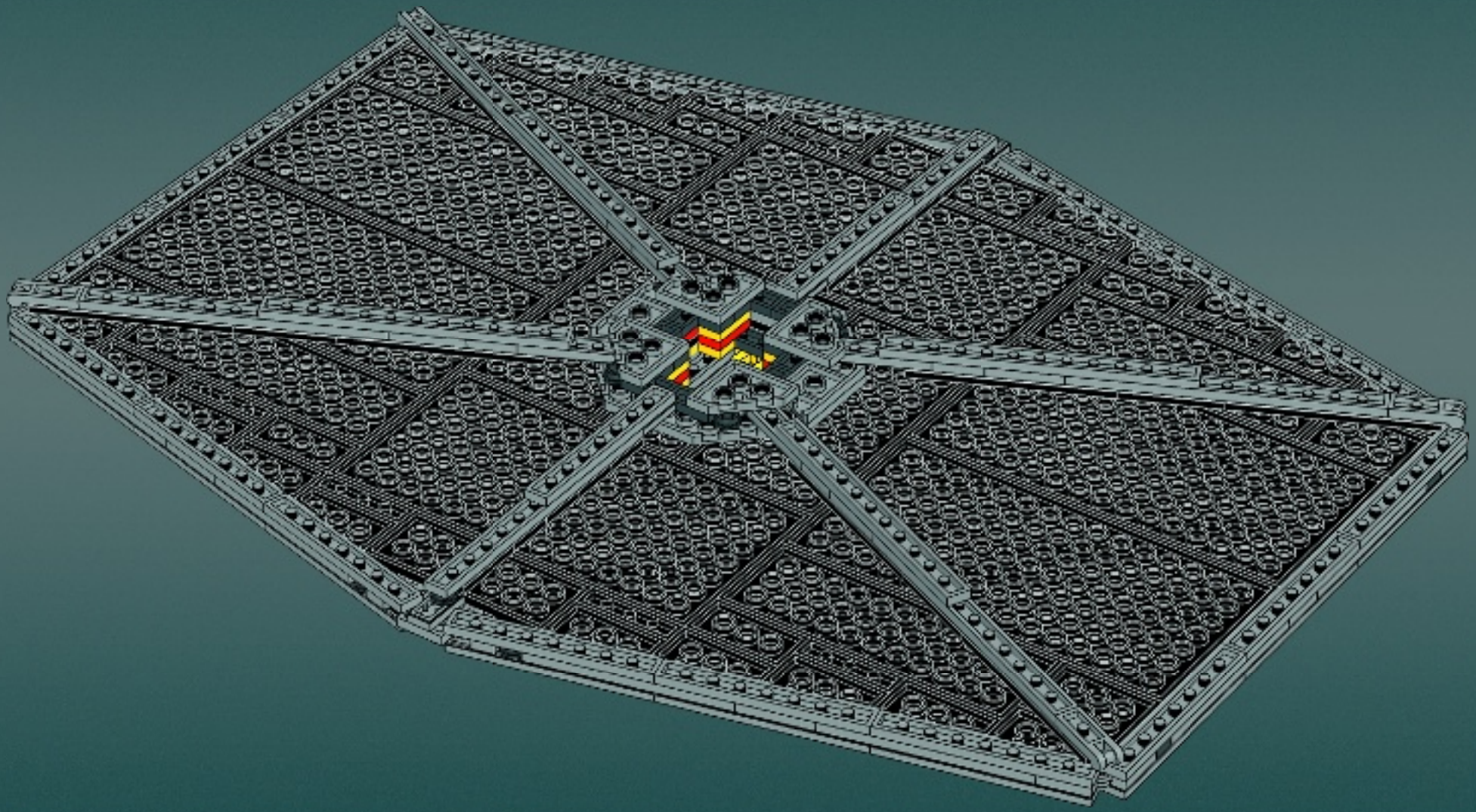

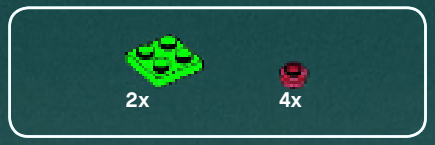

36

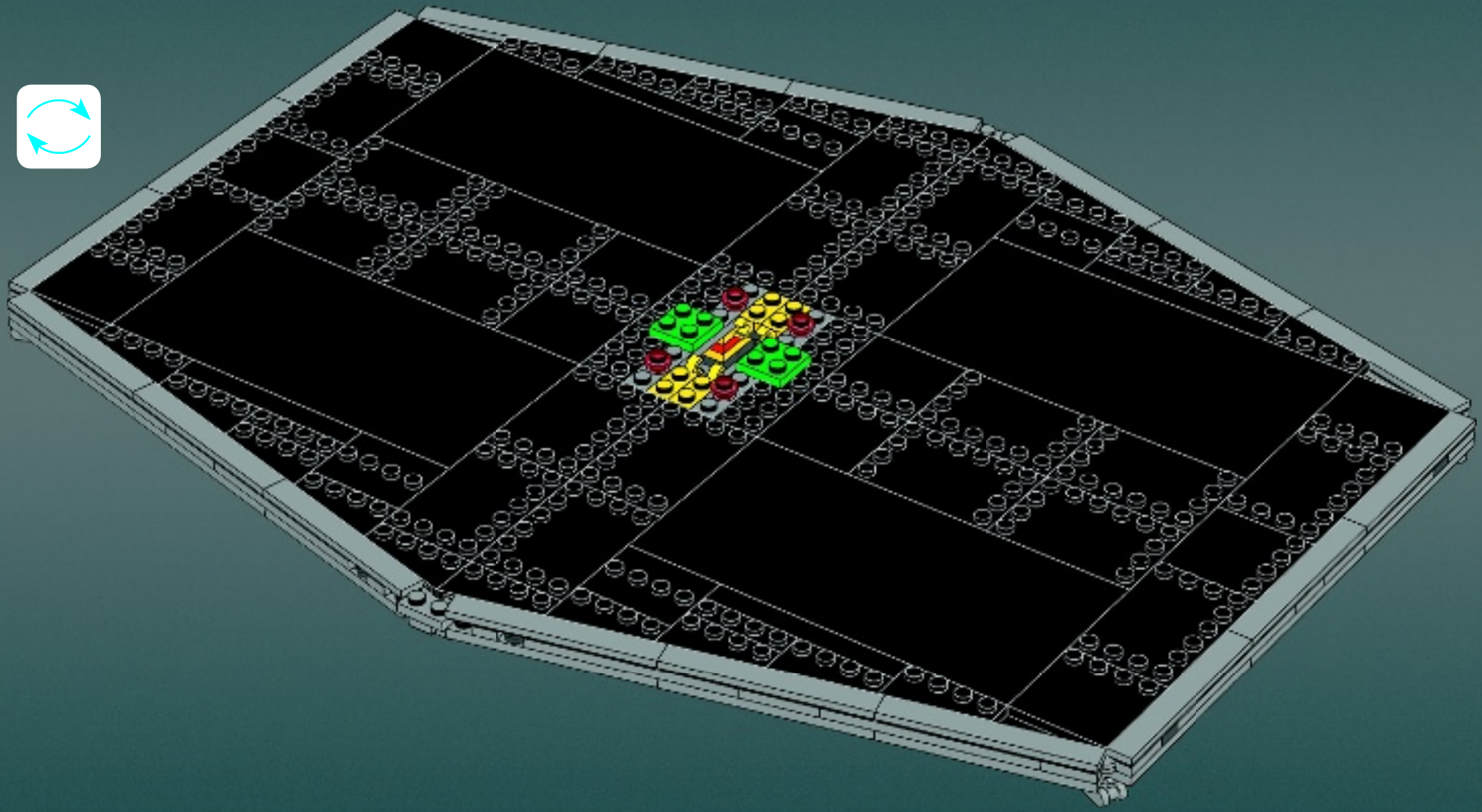

1x

37

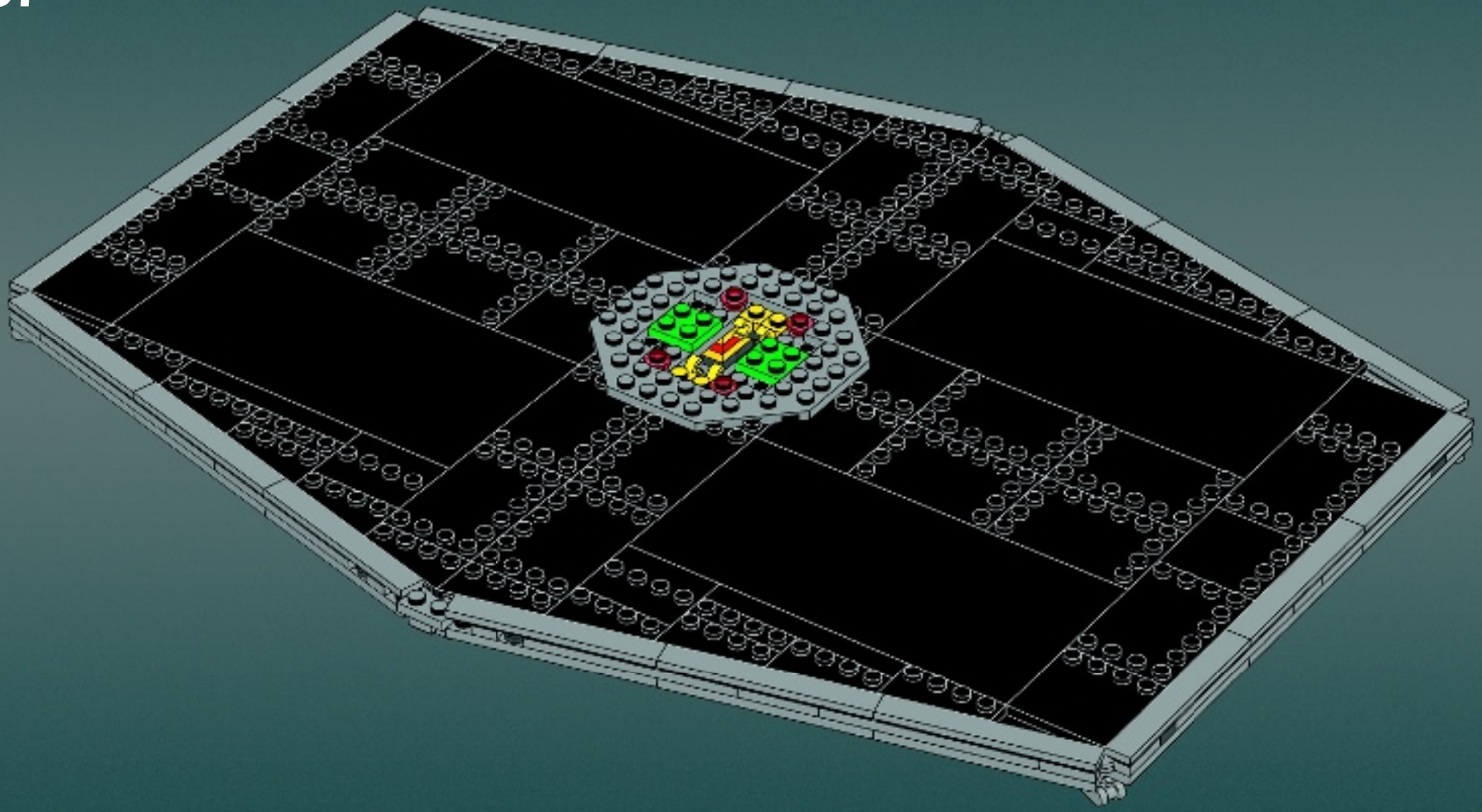

38

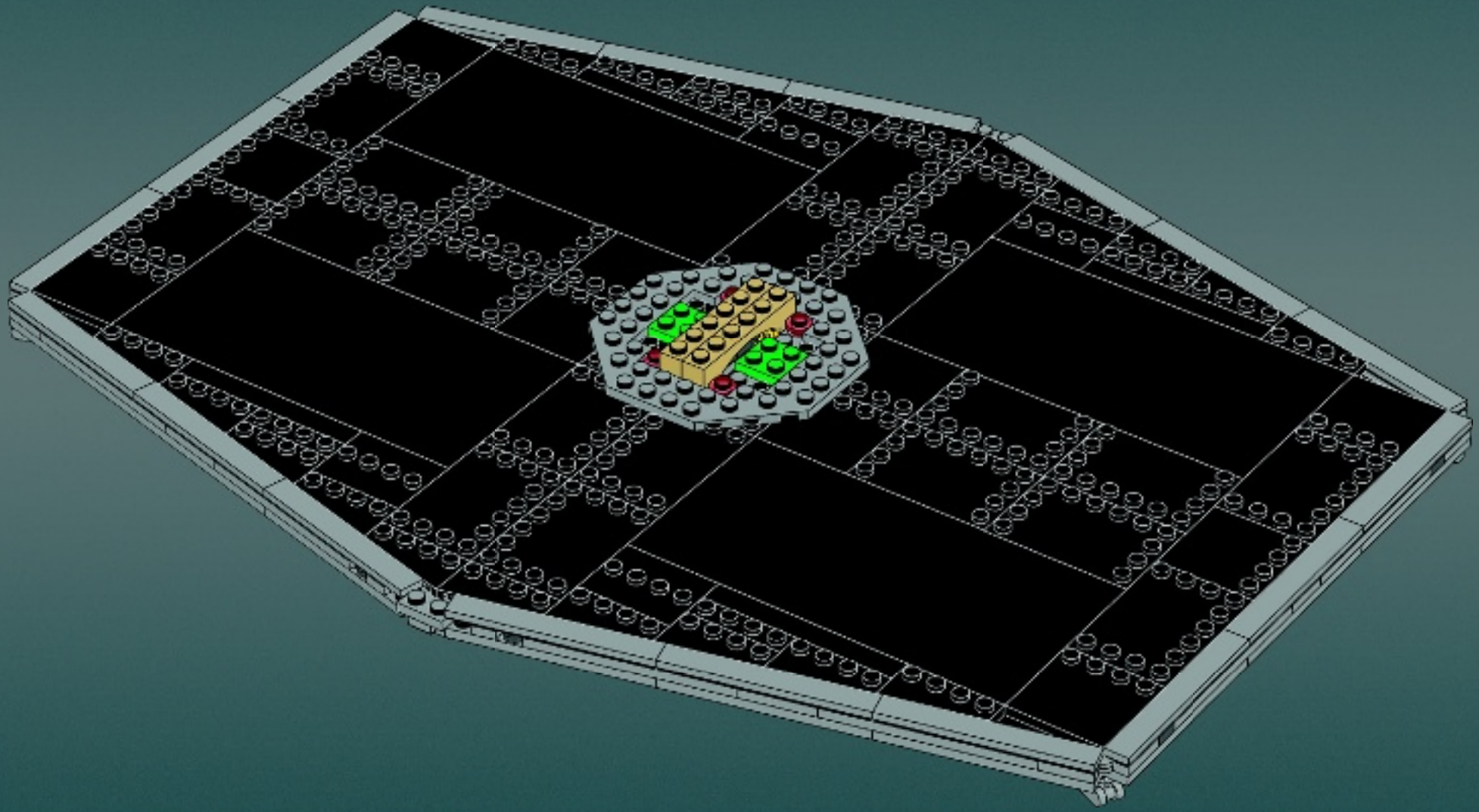

39

1

2

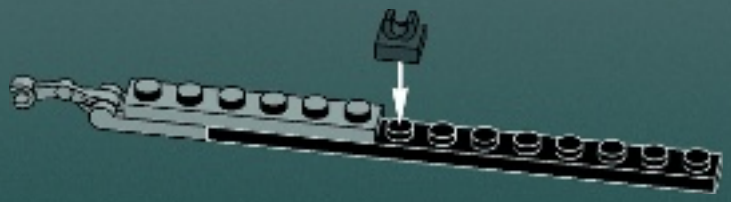

3

4

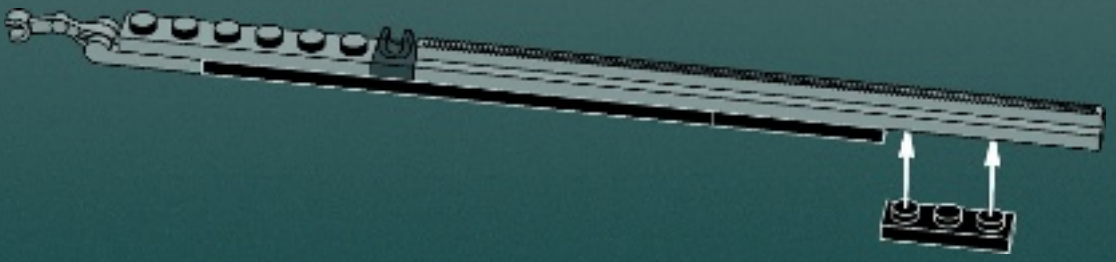

4x

40

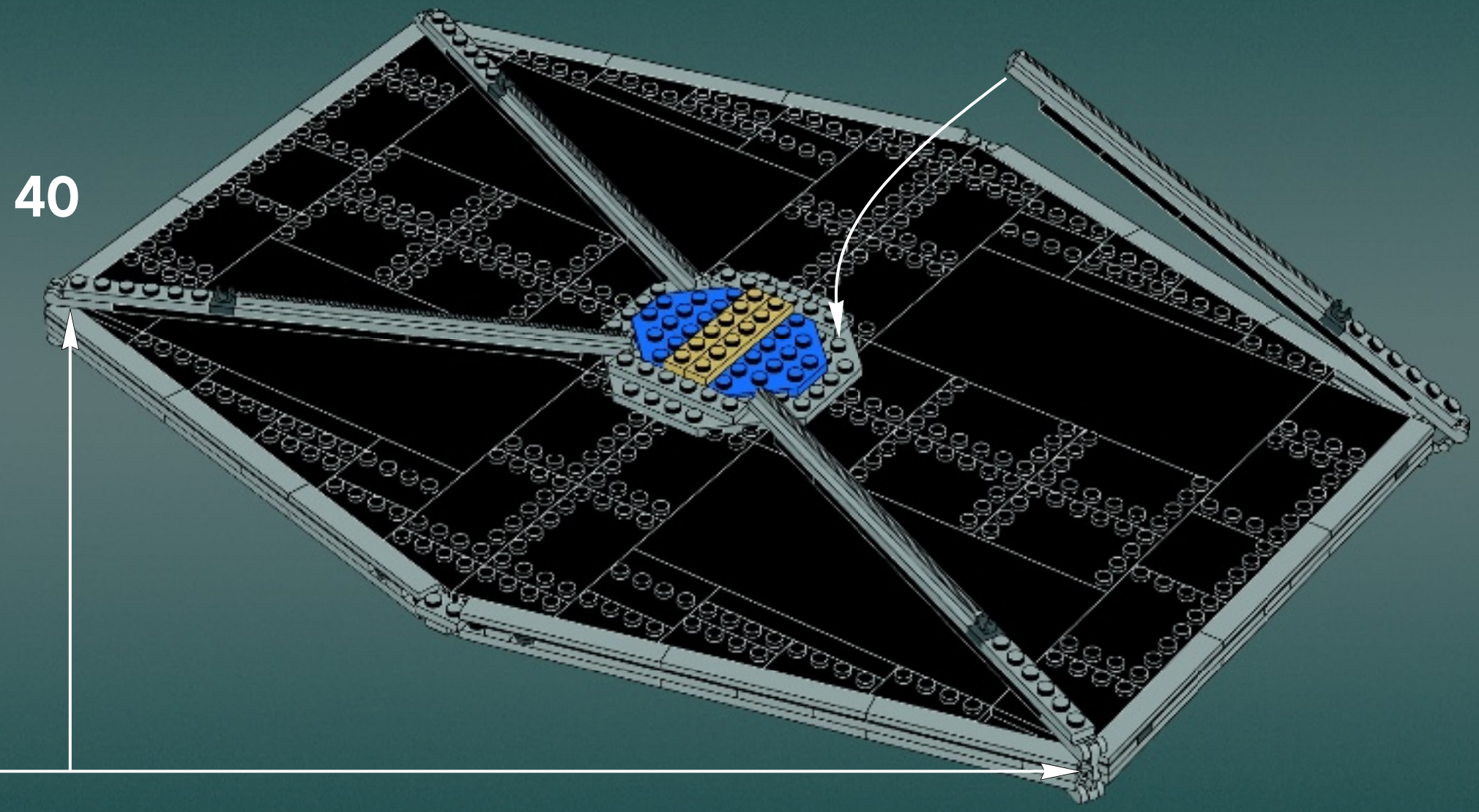

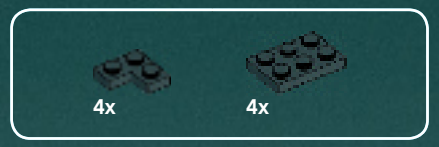

41

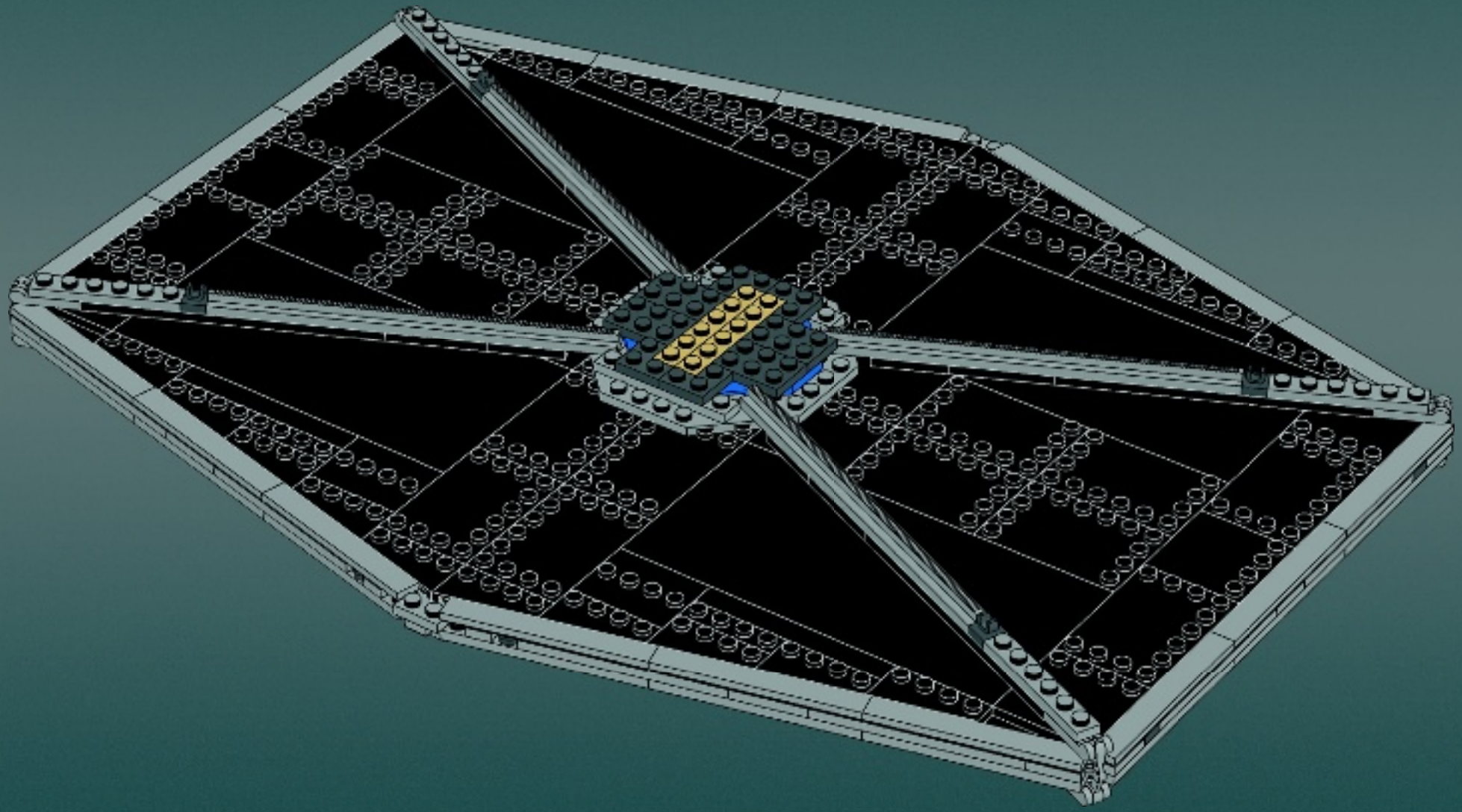

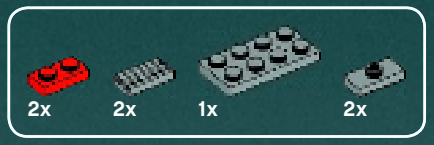

42

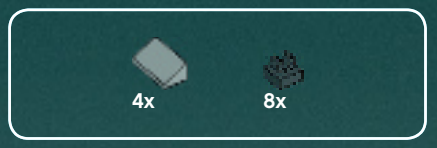

43

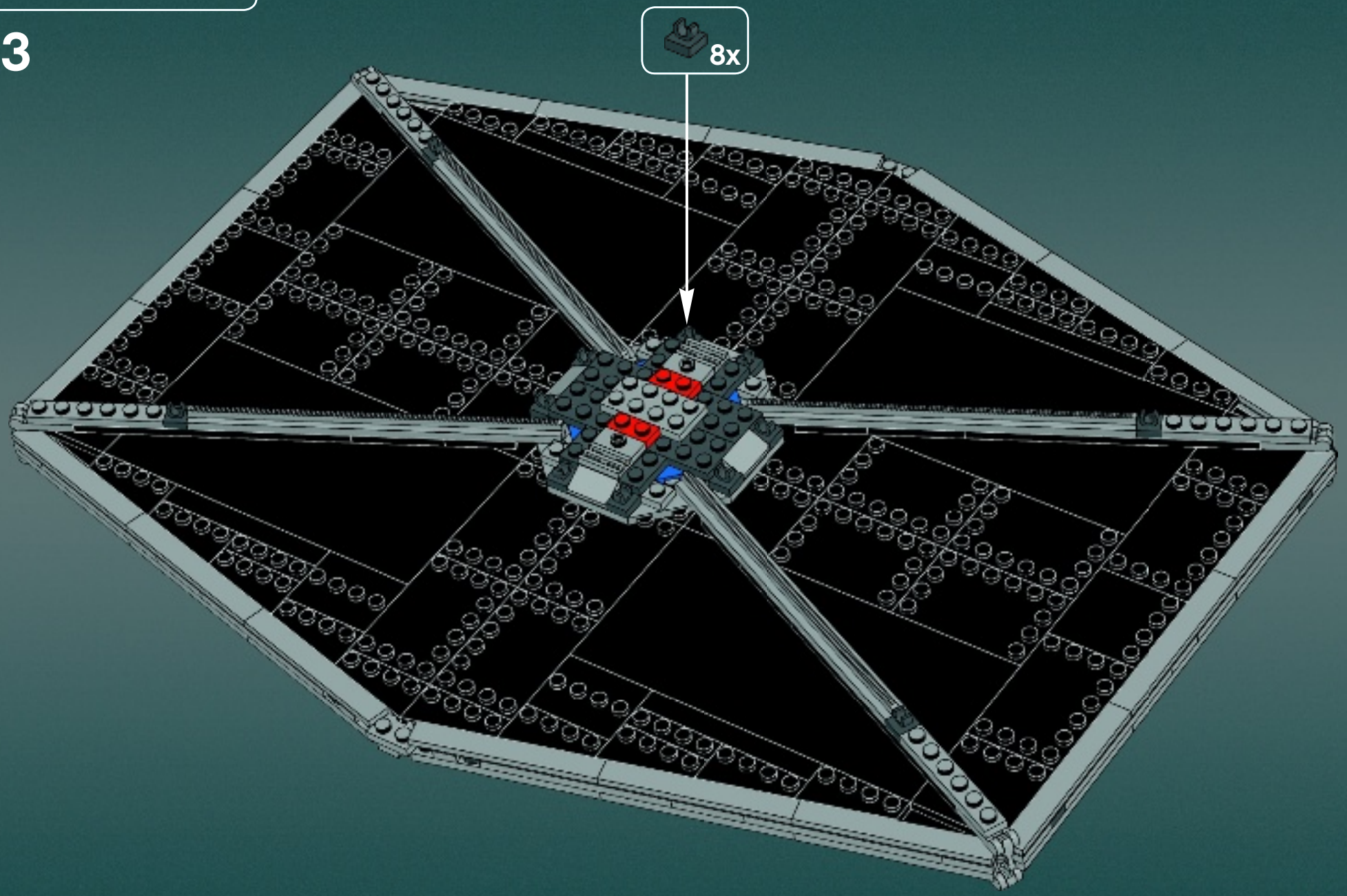

44

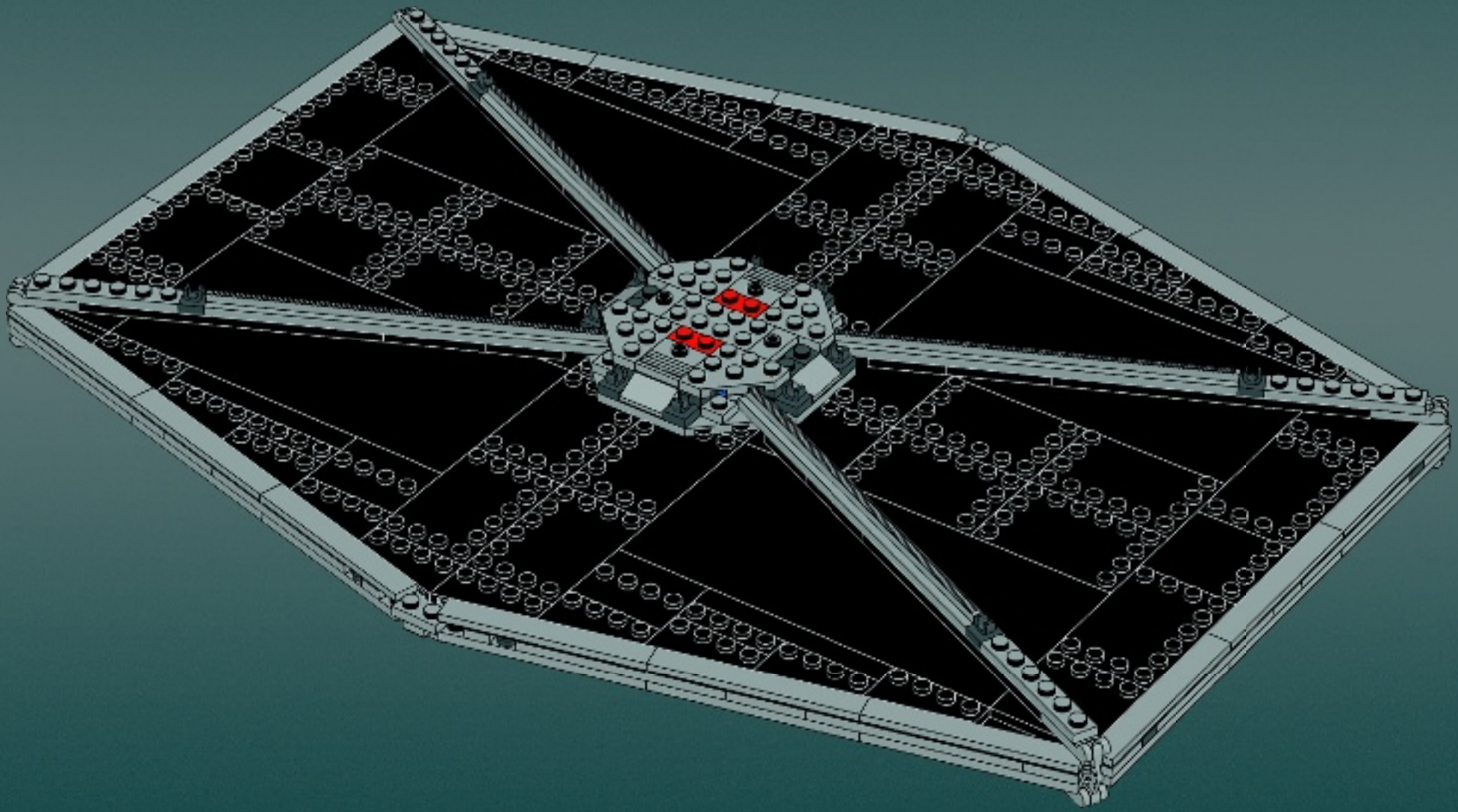

45

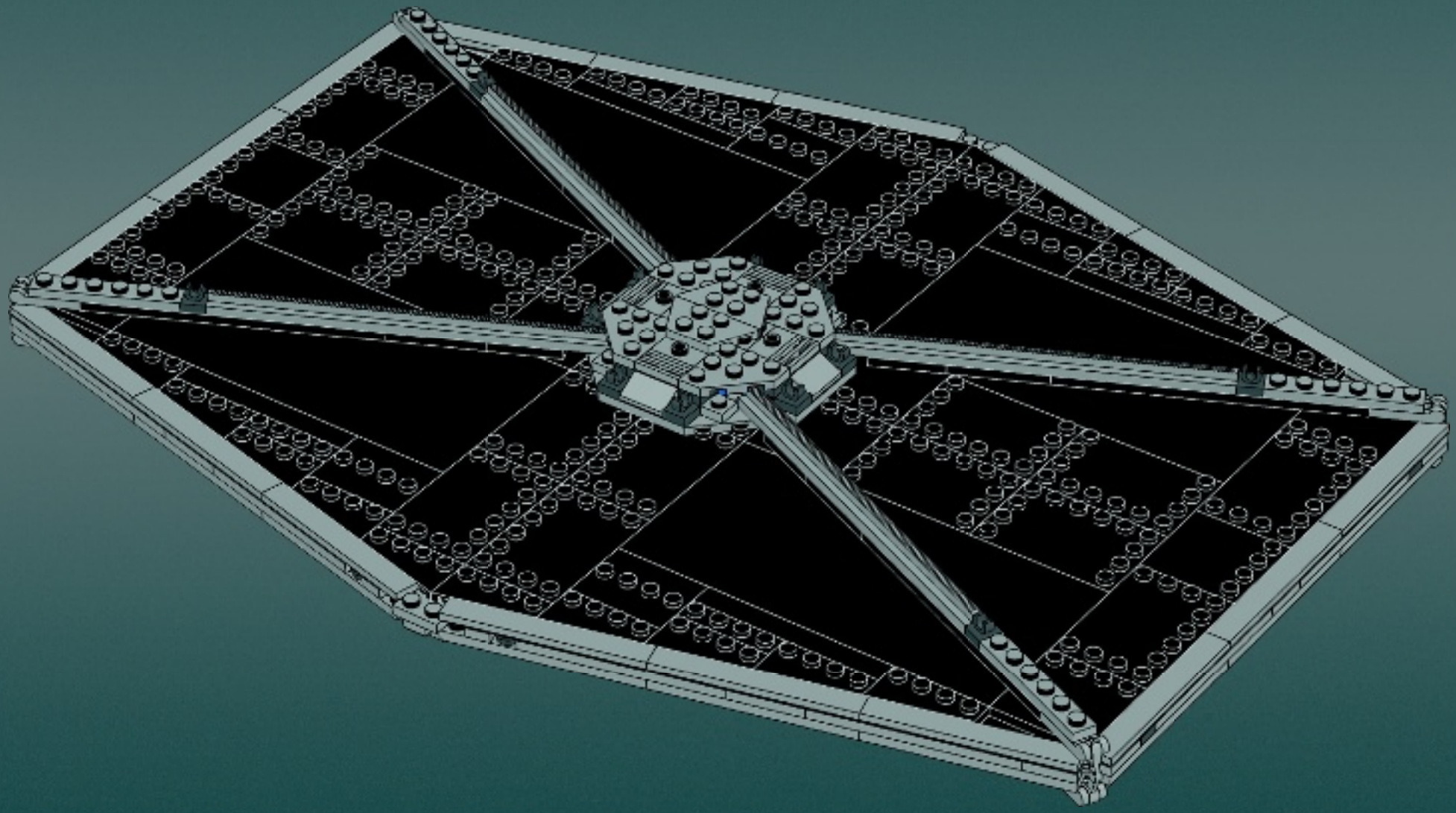

46

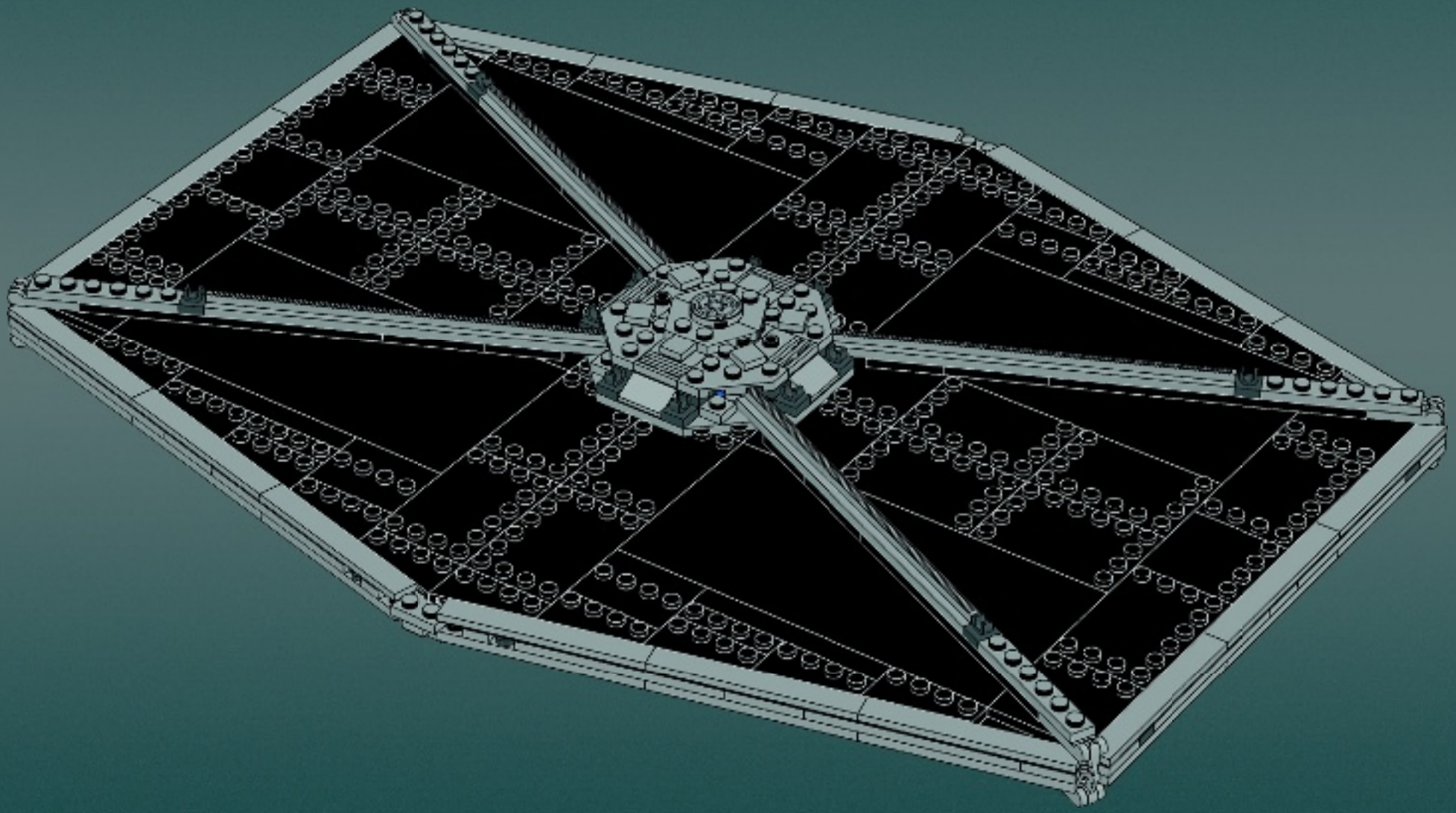

47

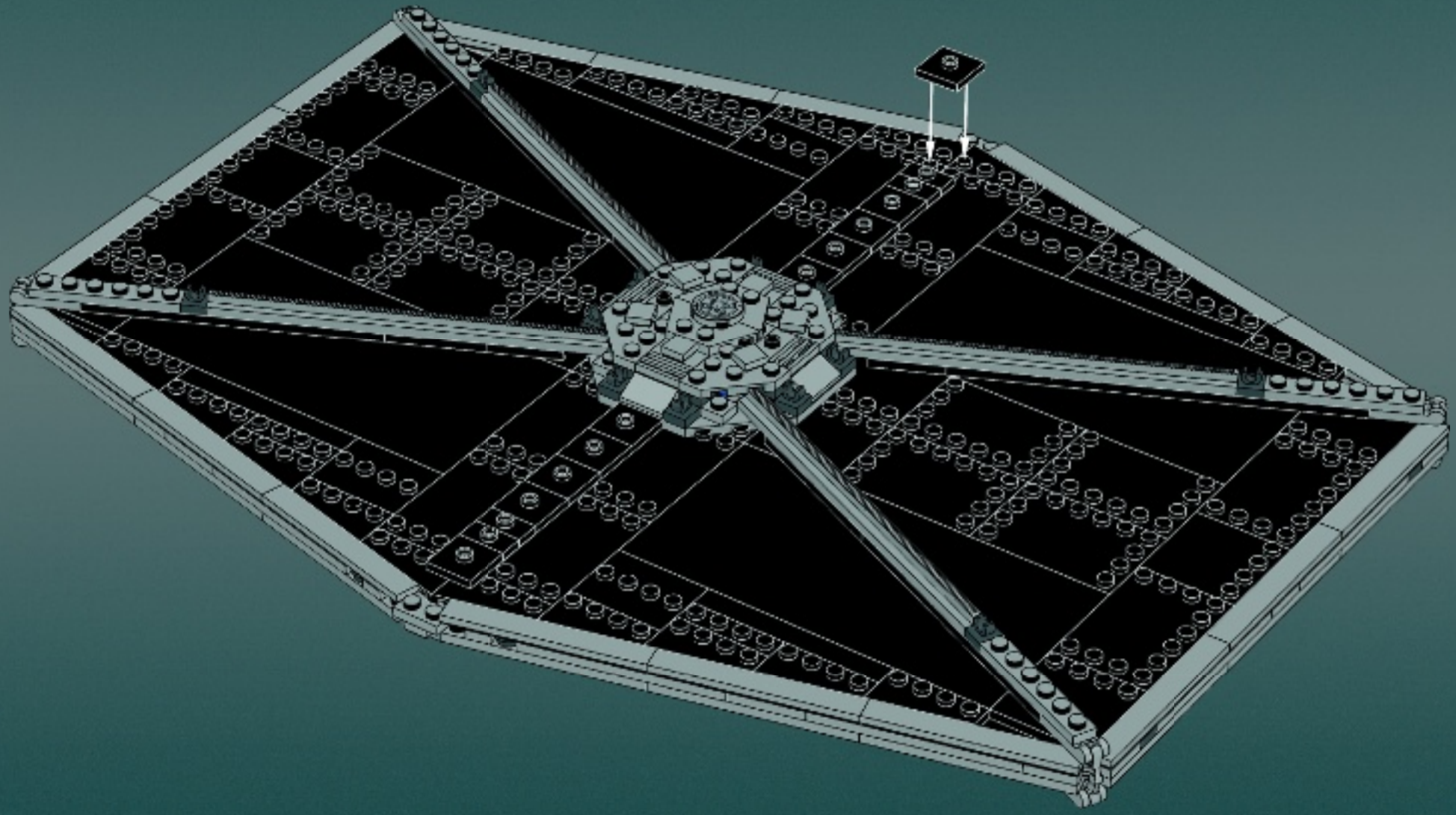

48

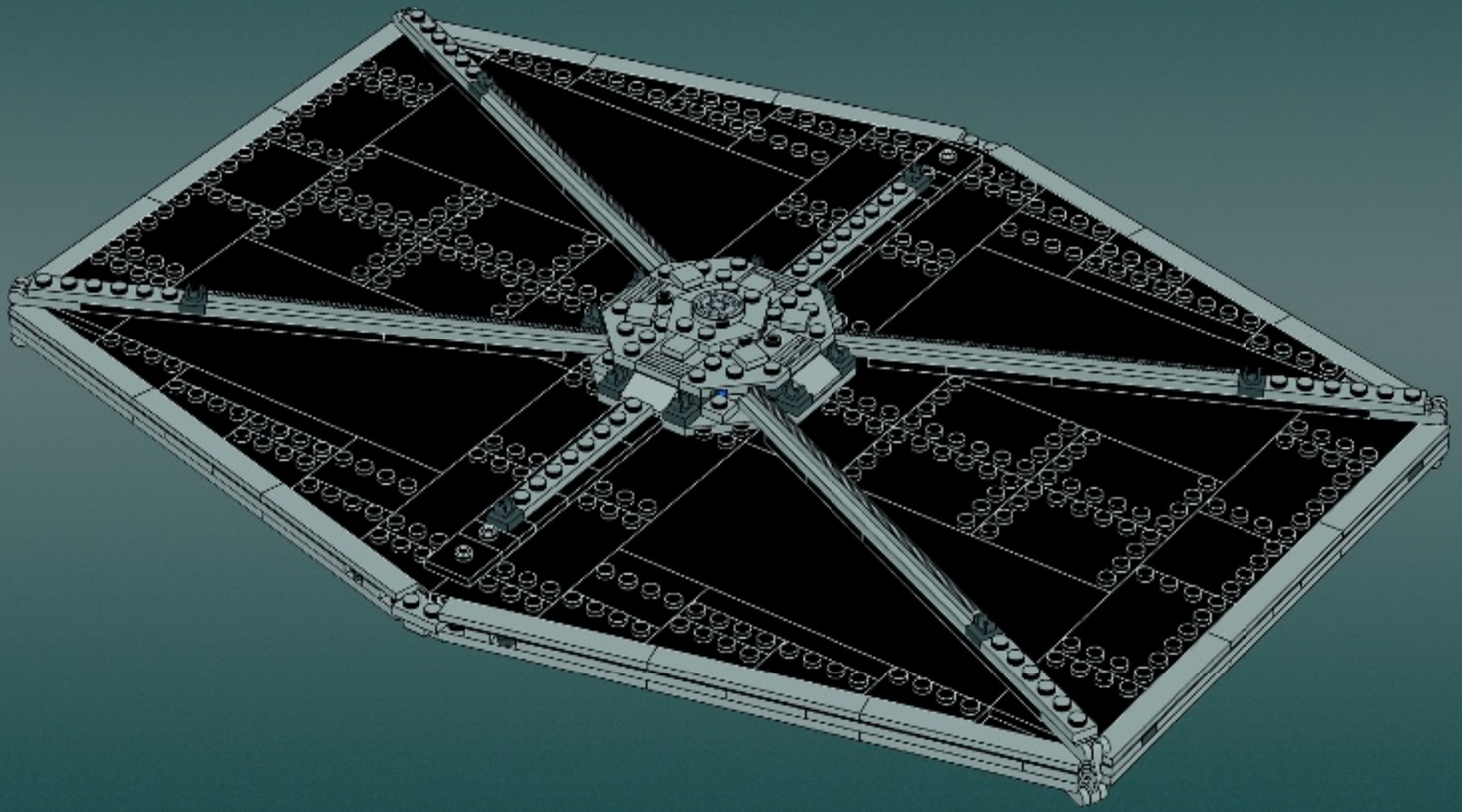

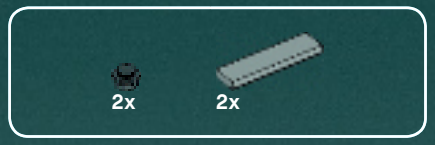

49

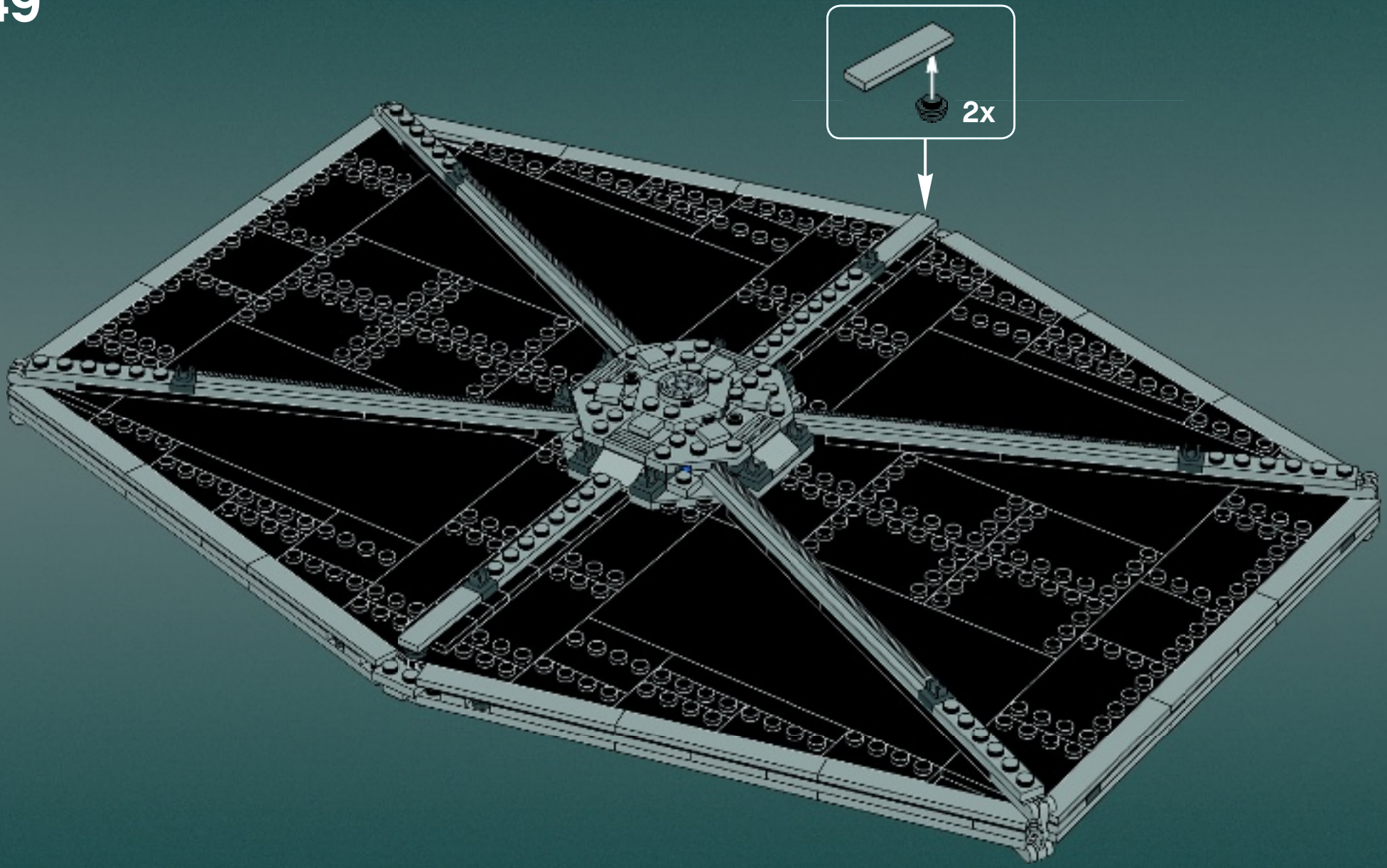

50

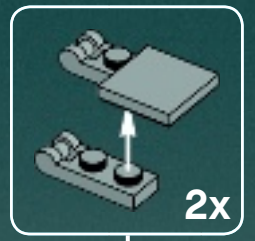

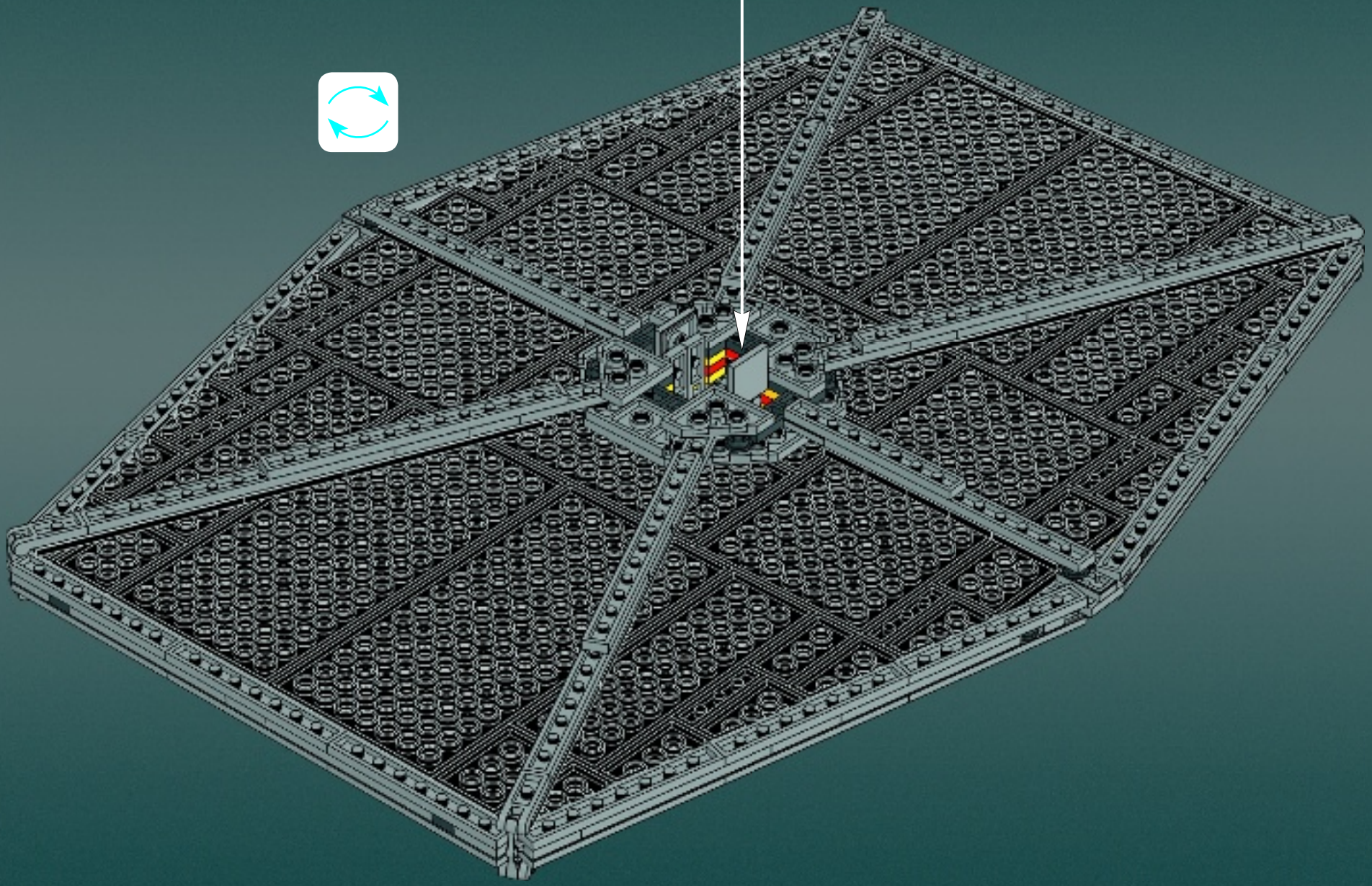

51

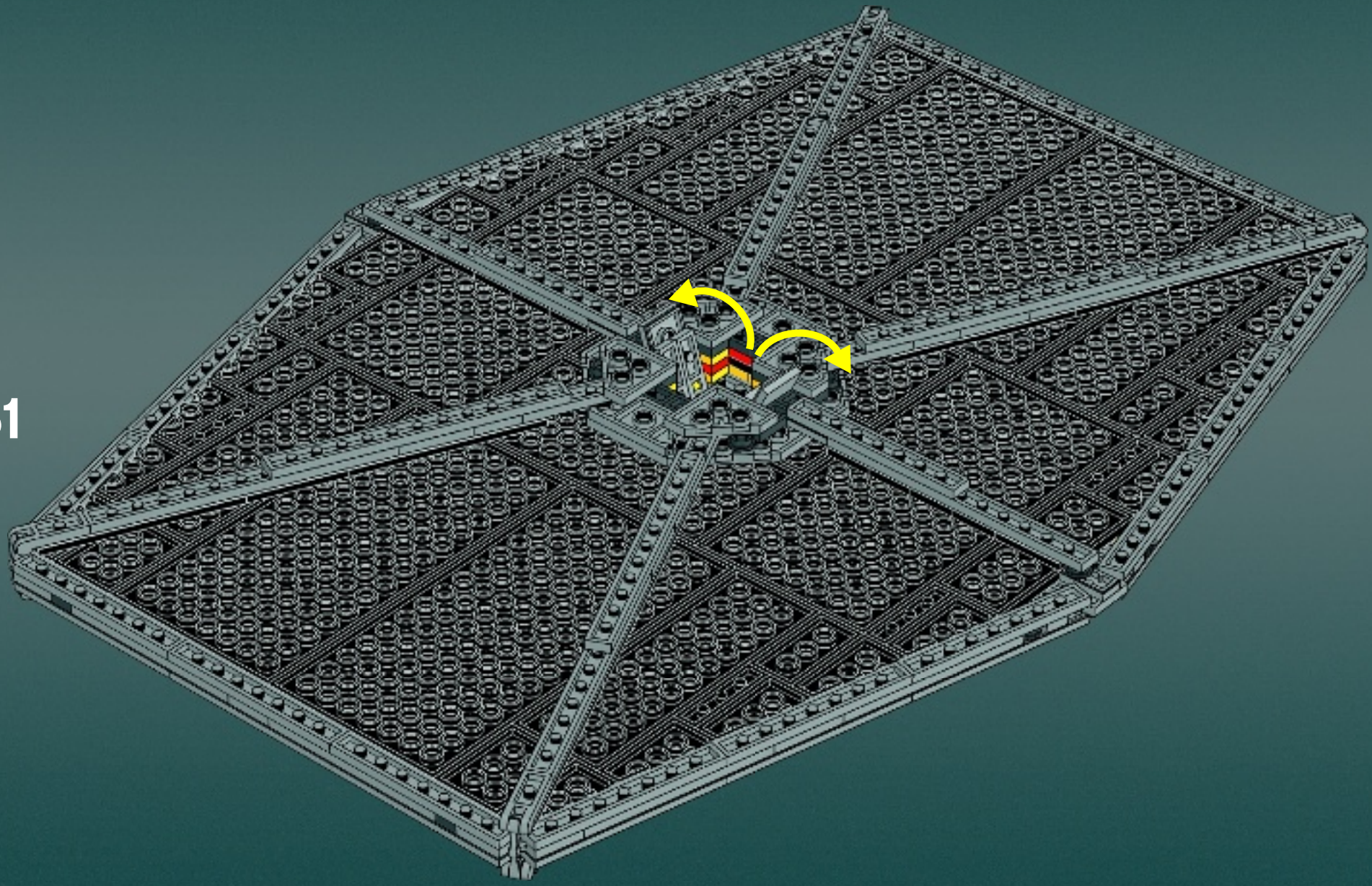

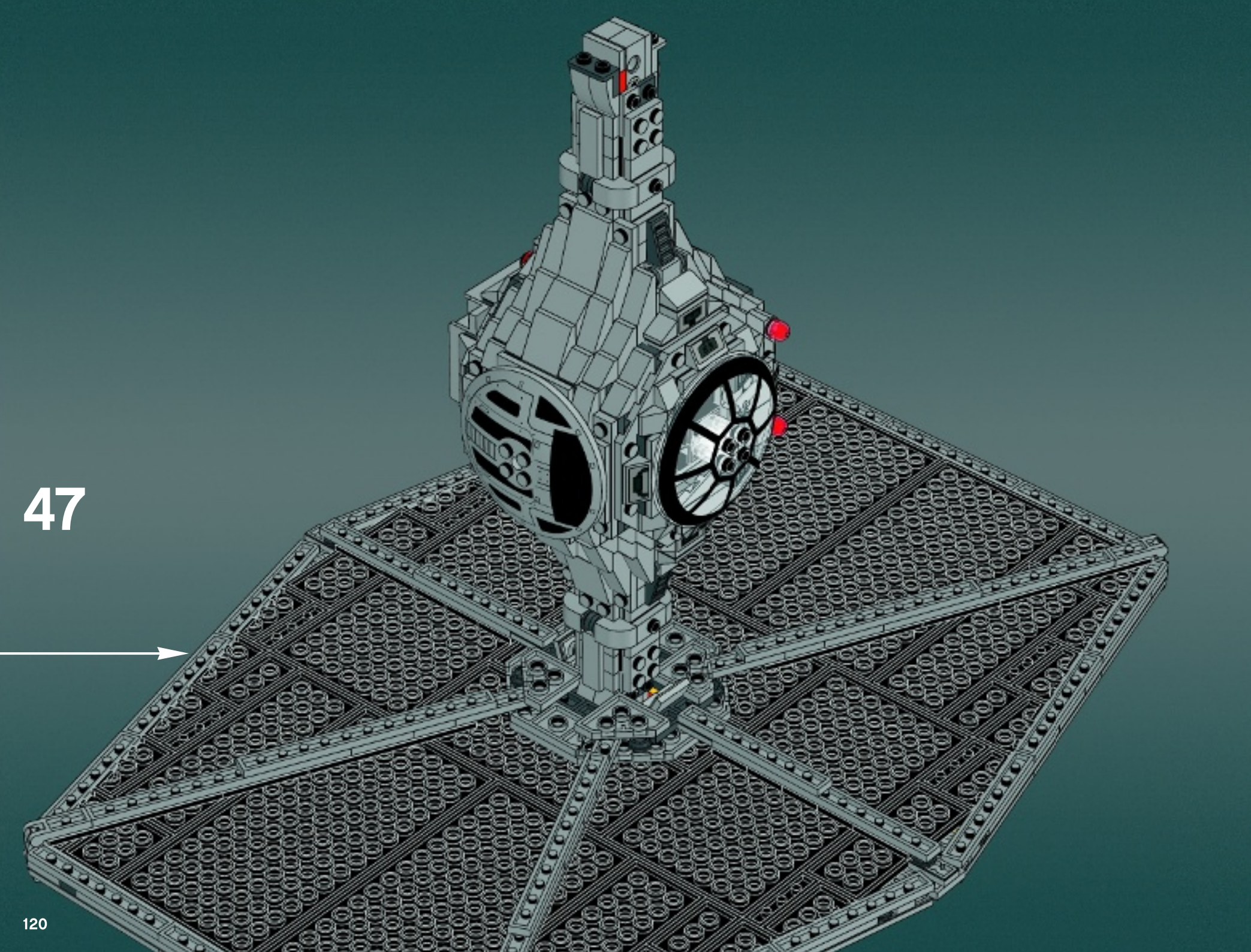
47

48

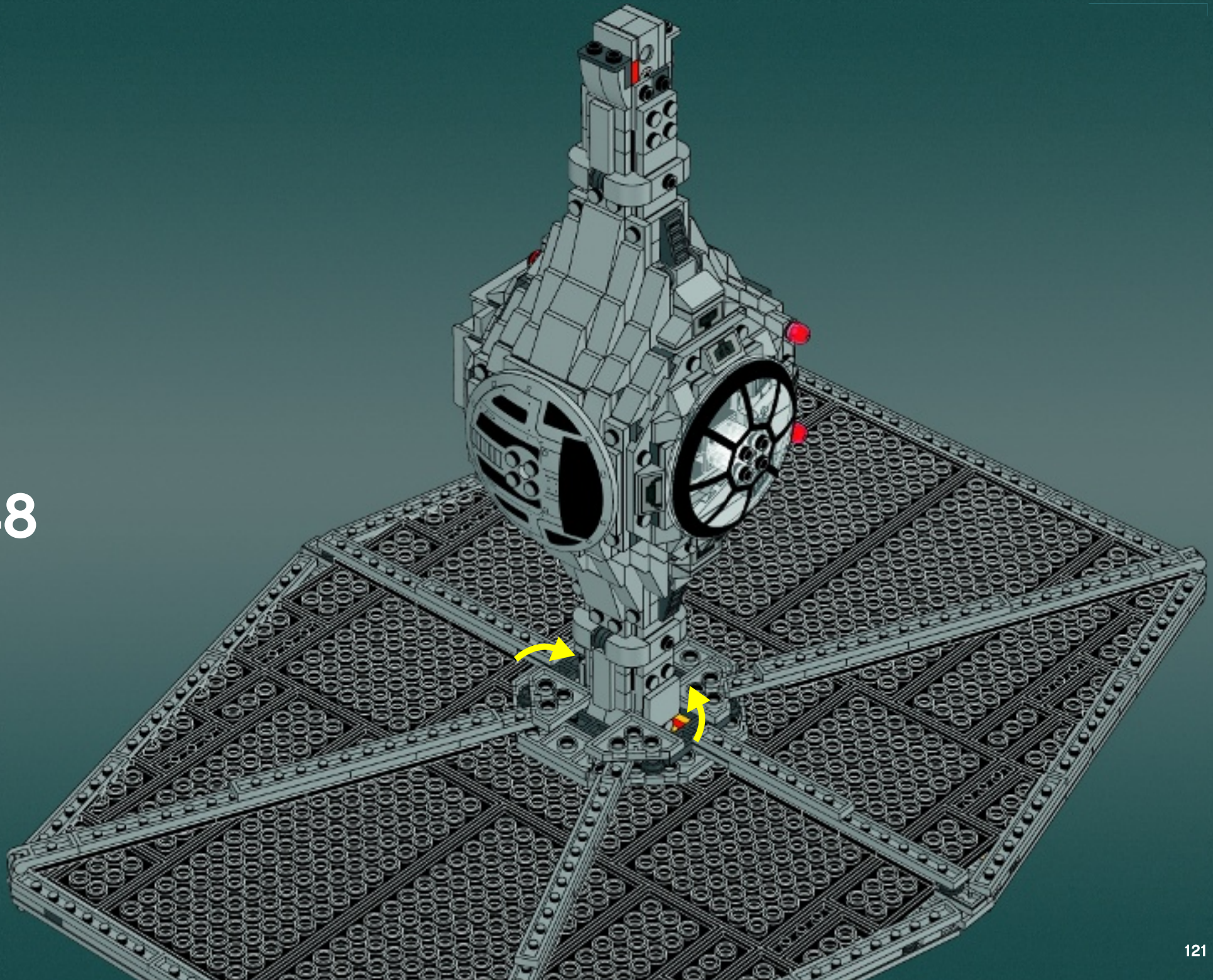

49

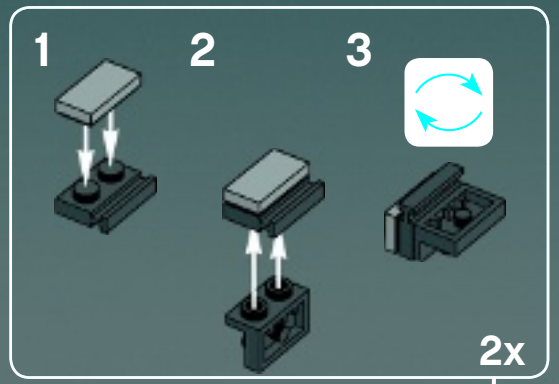

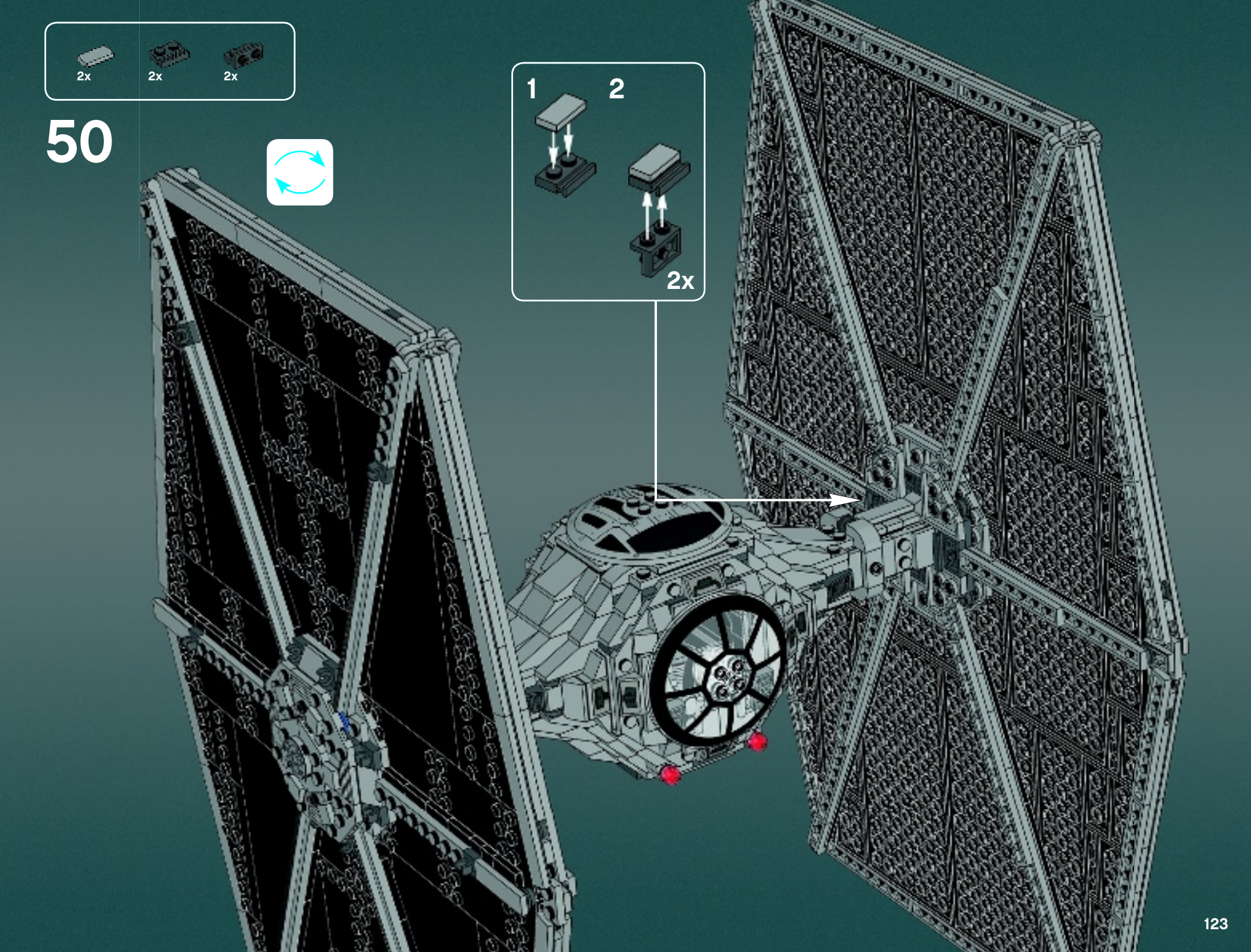
2x
2x
2x
50
1
2
2x

51

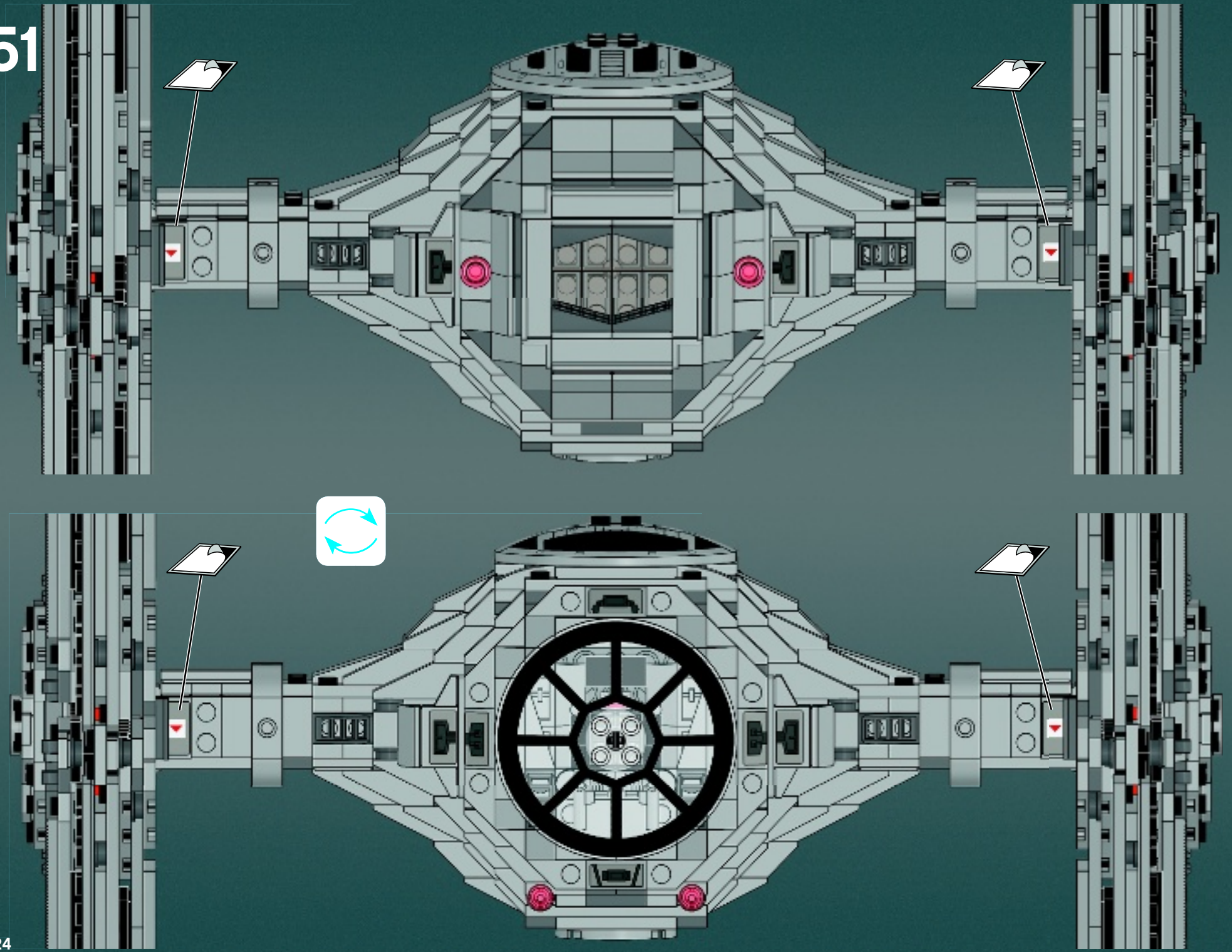

+

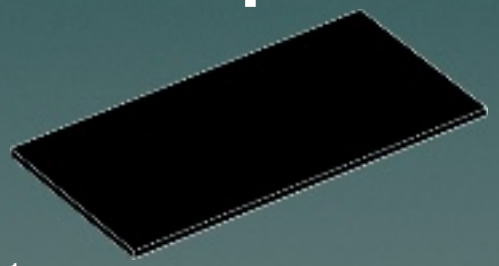

1x

=

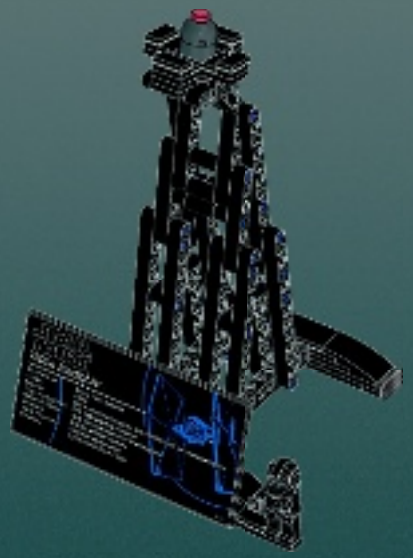

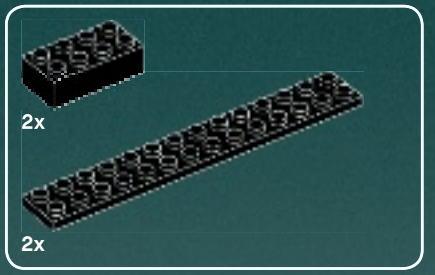

1

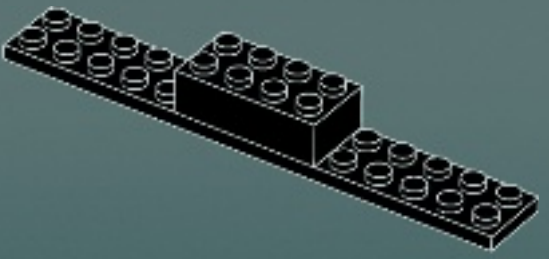

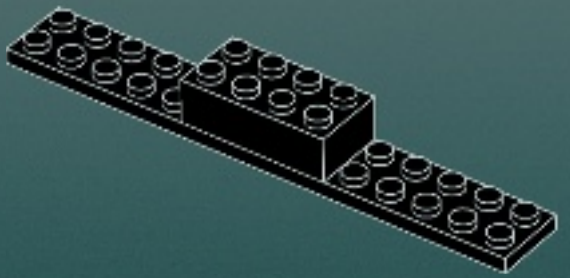

2

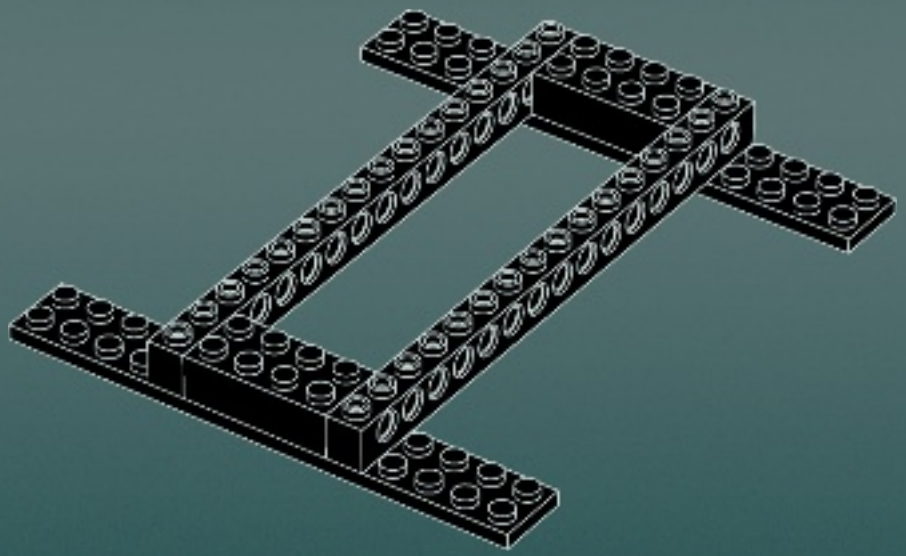

3

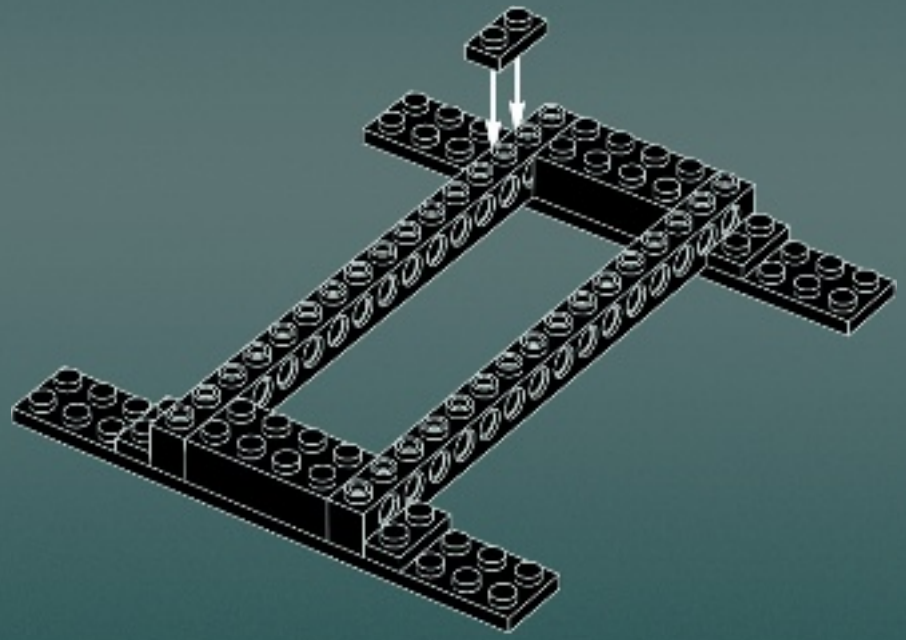

4

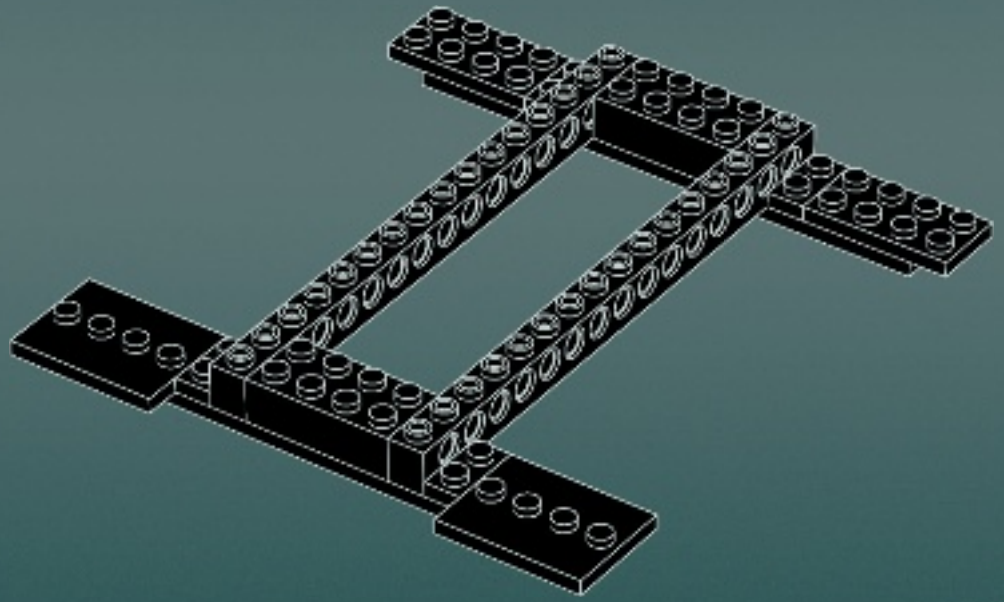

5

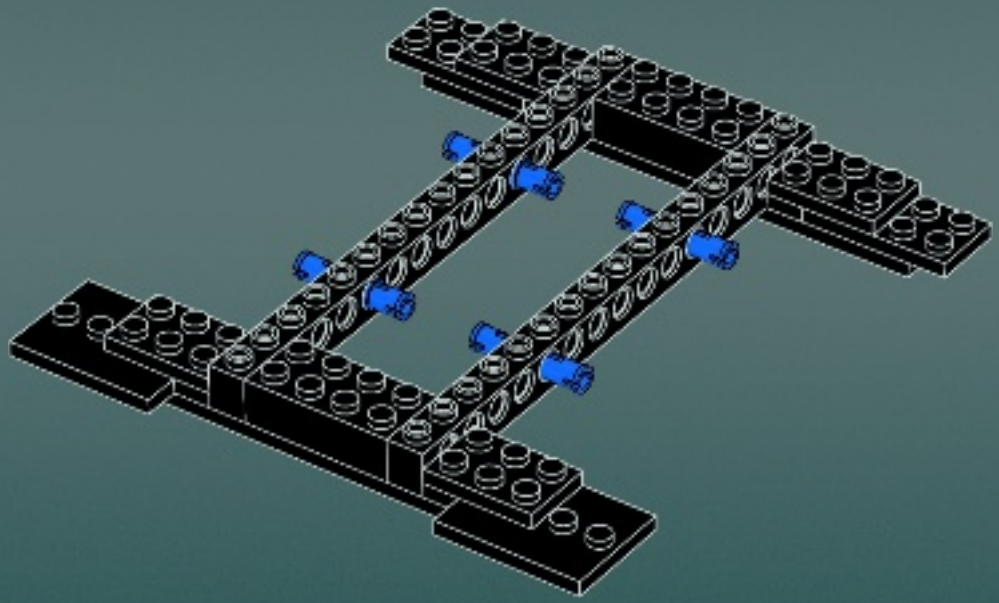

6

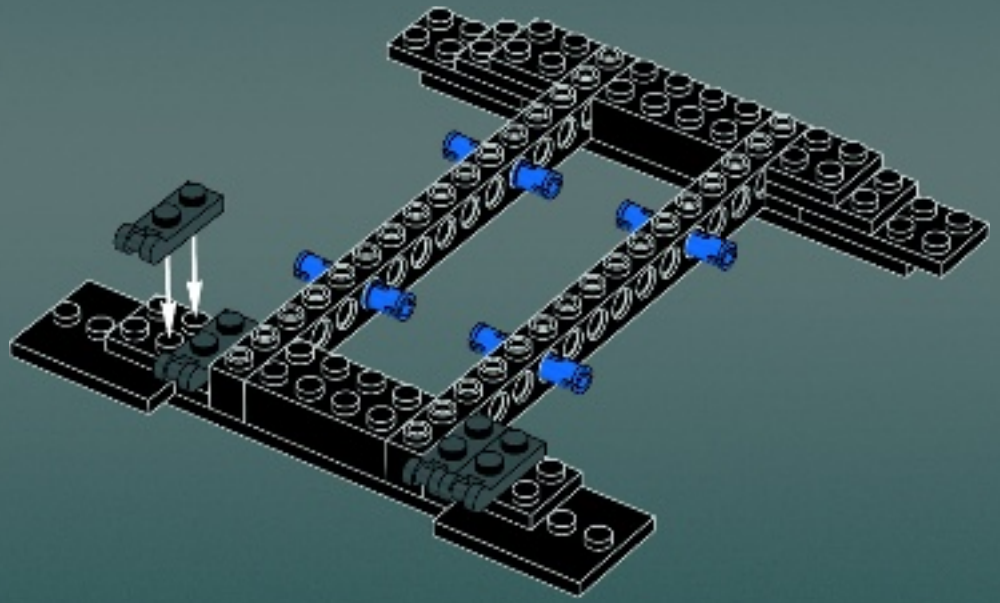

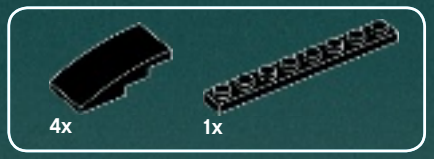

7

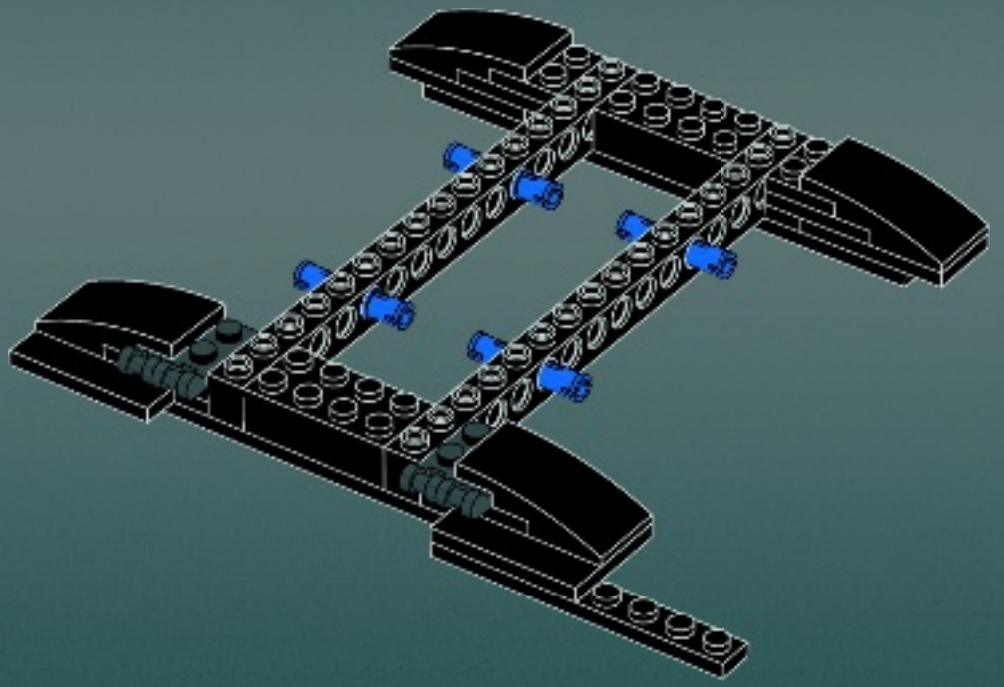

8

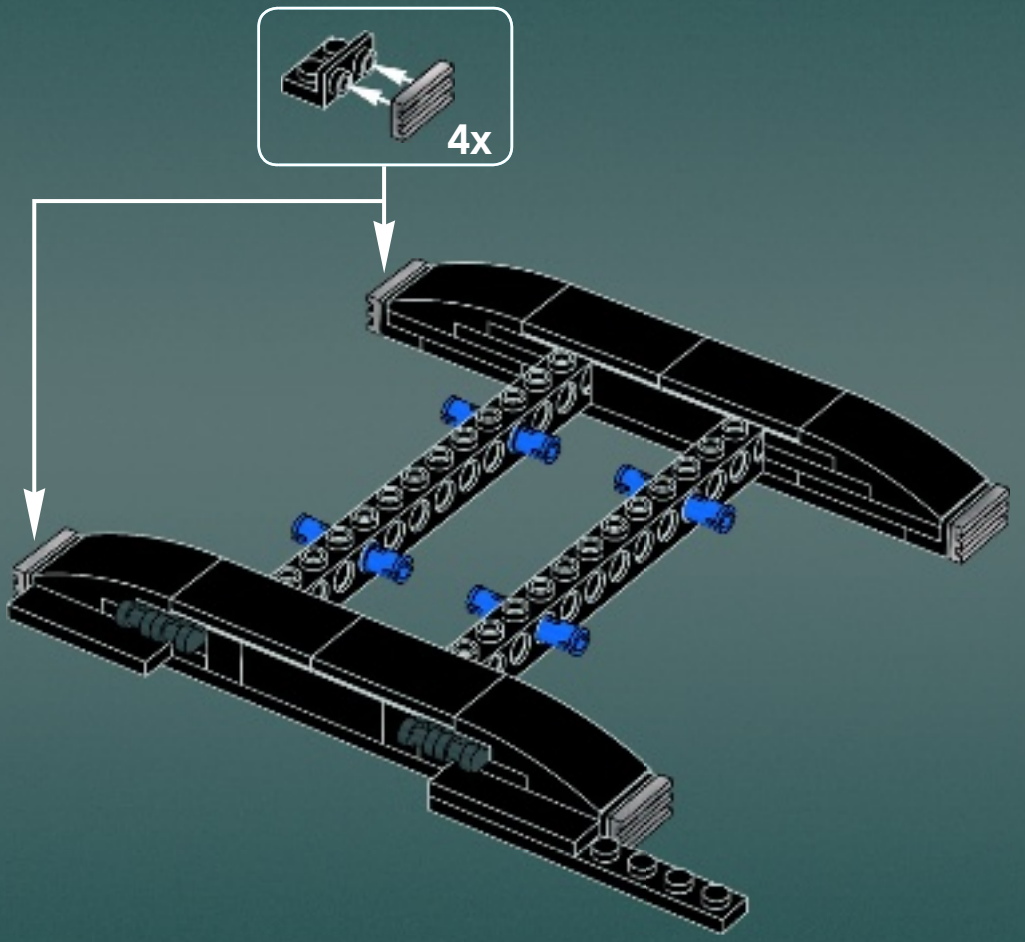

9

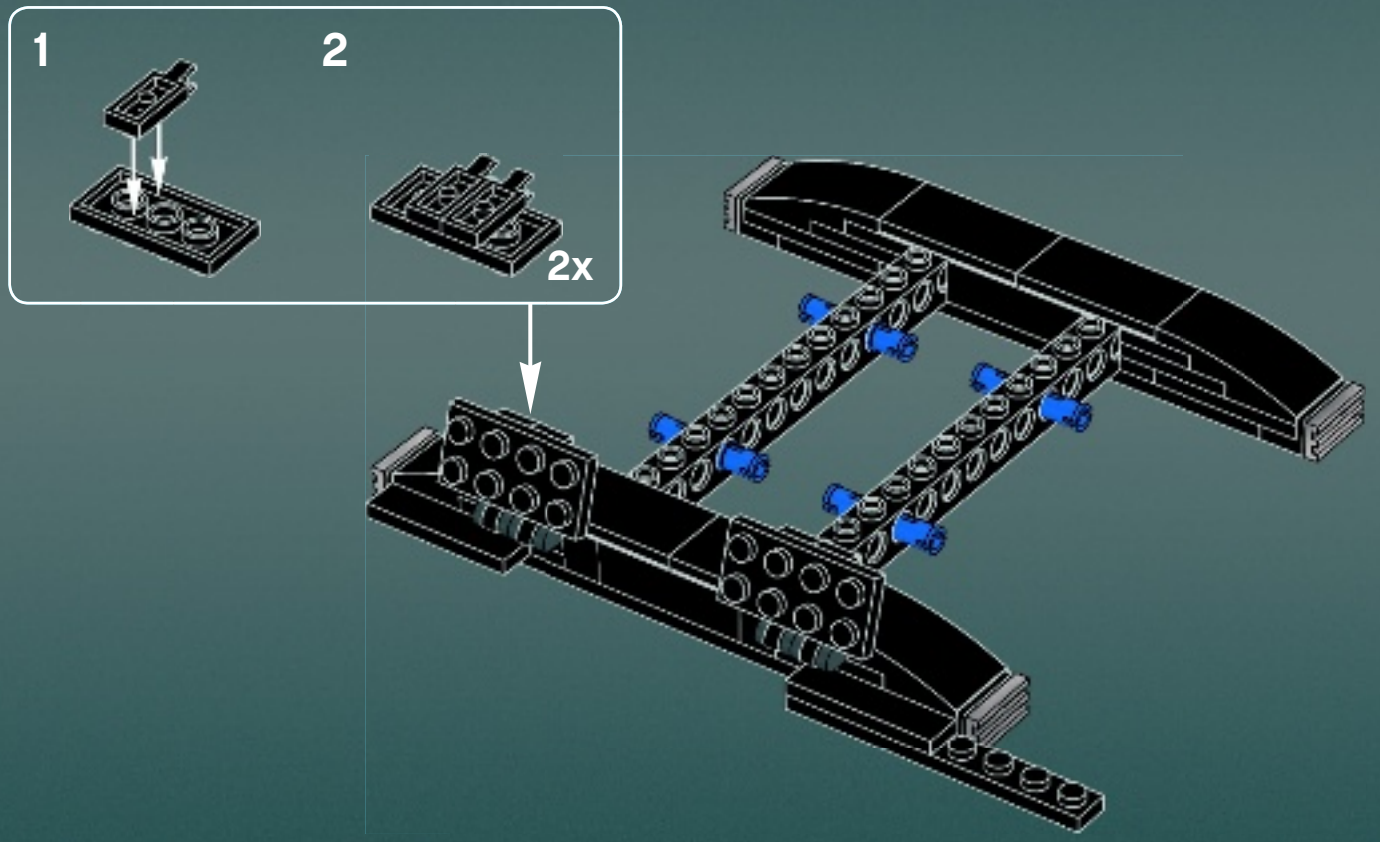

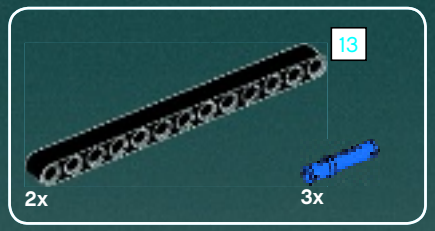

10

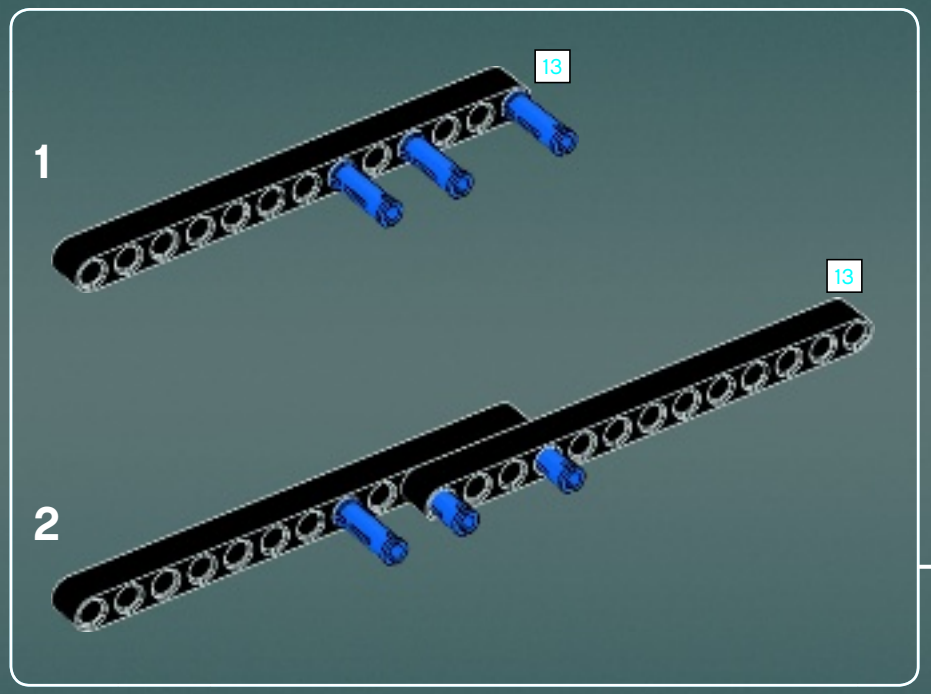

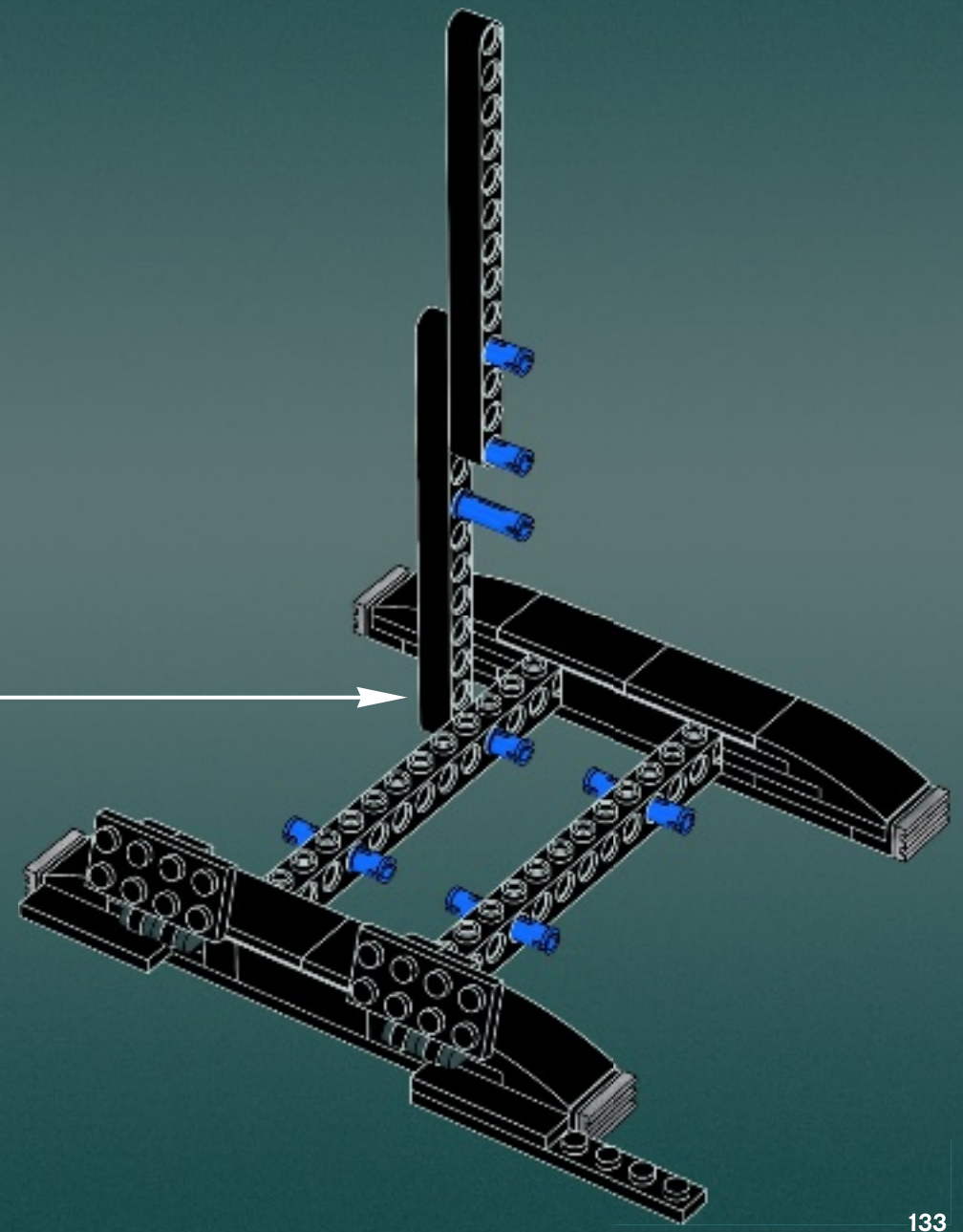

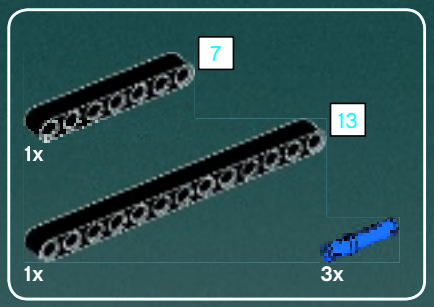

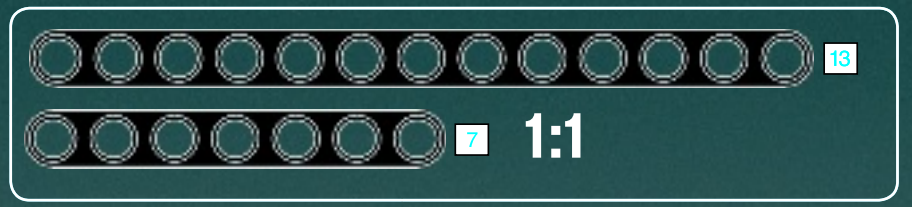

11

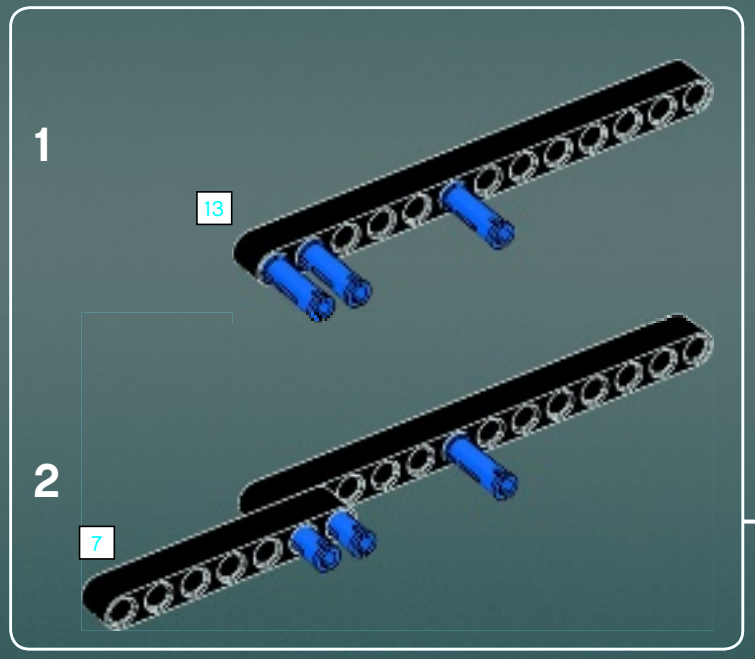

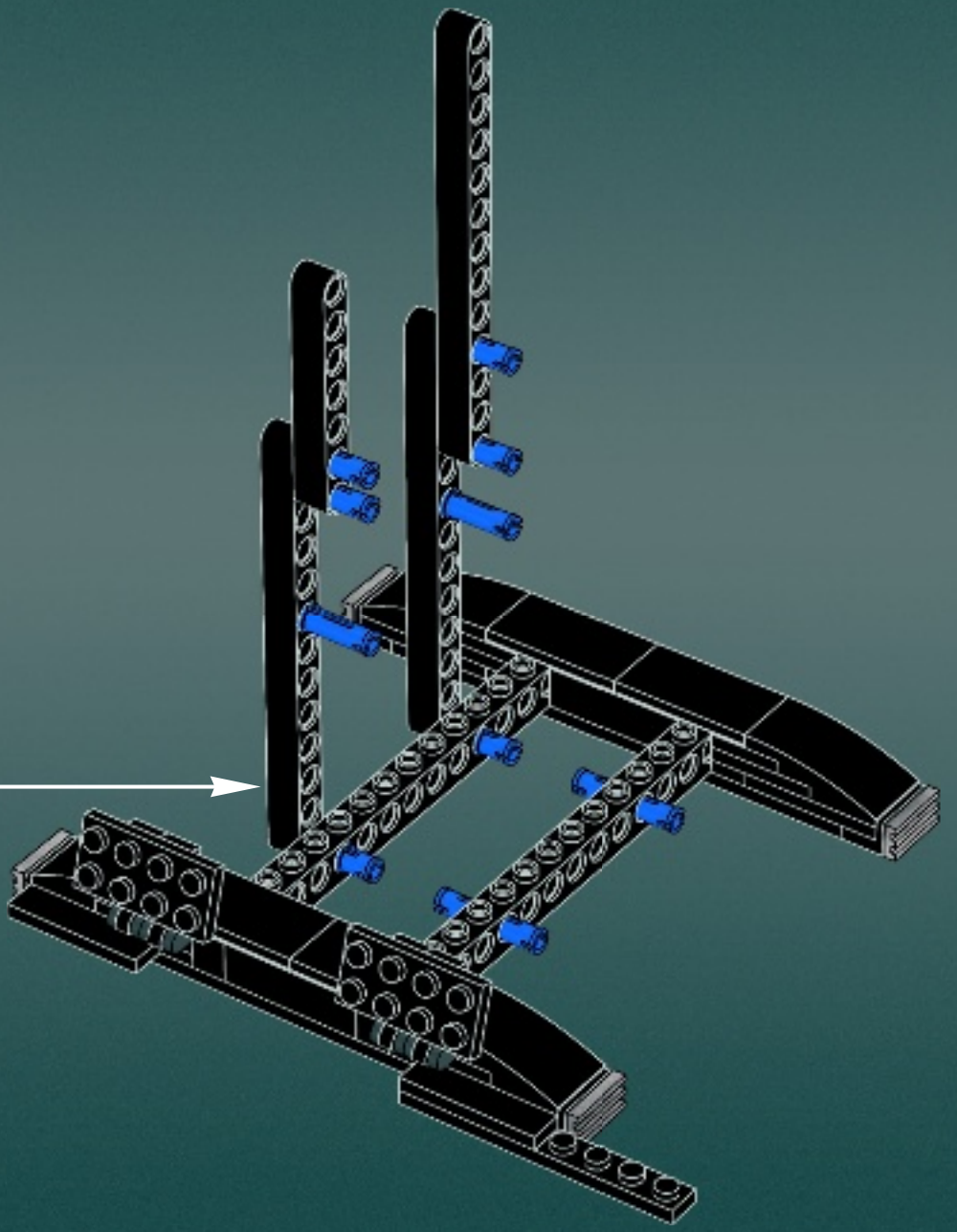

12

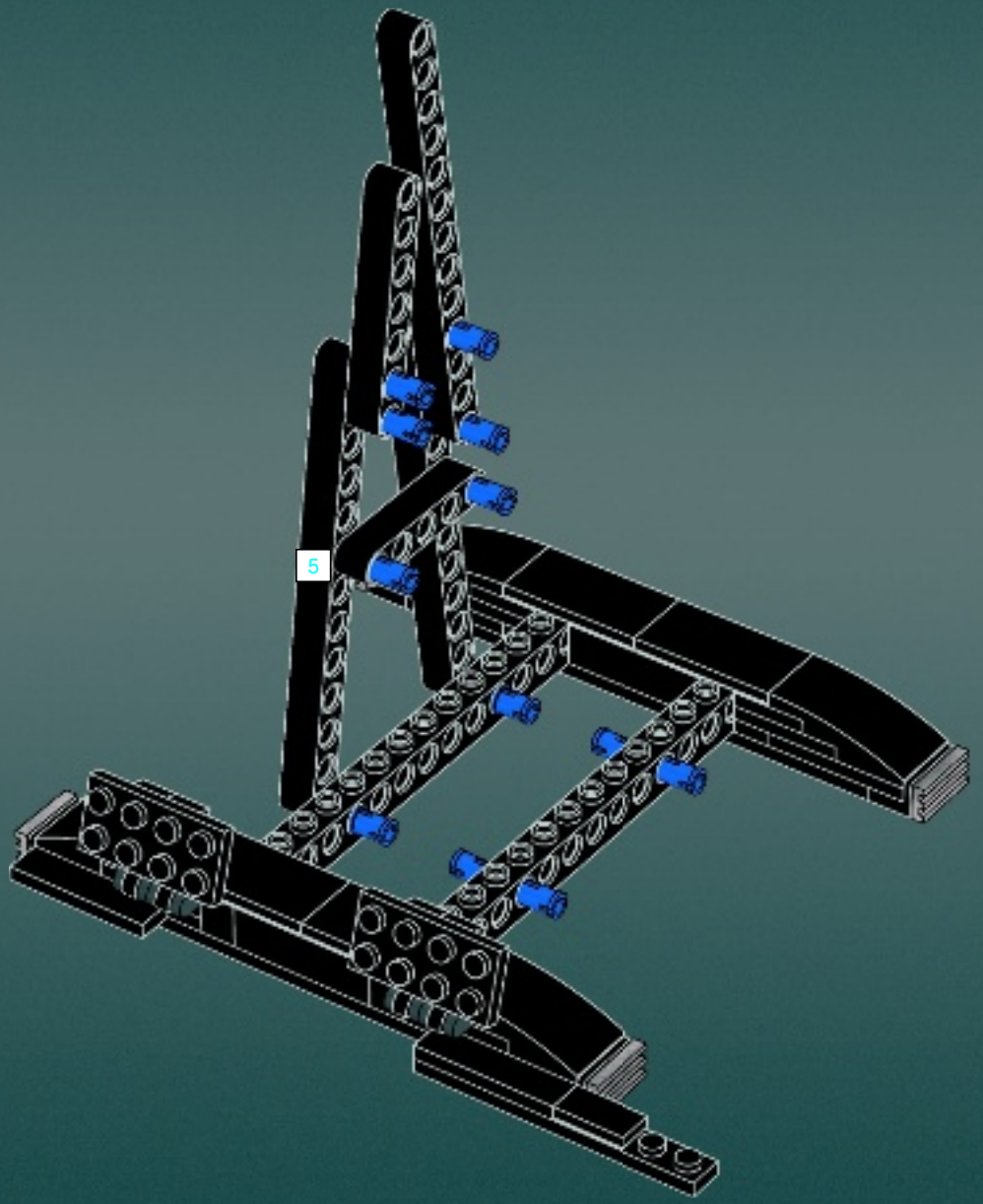

13

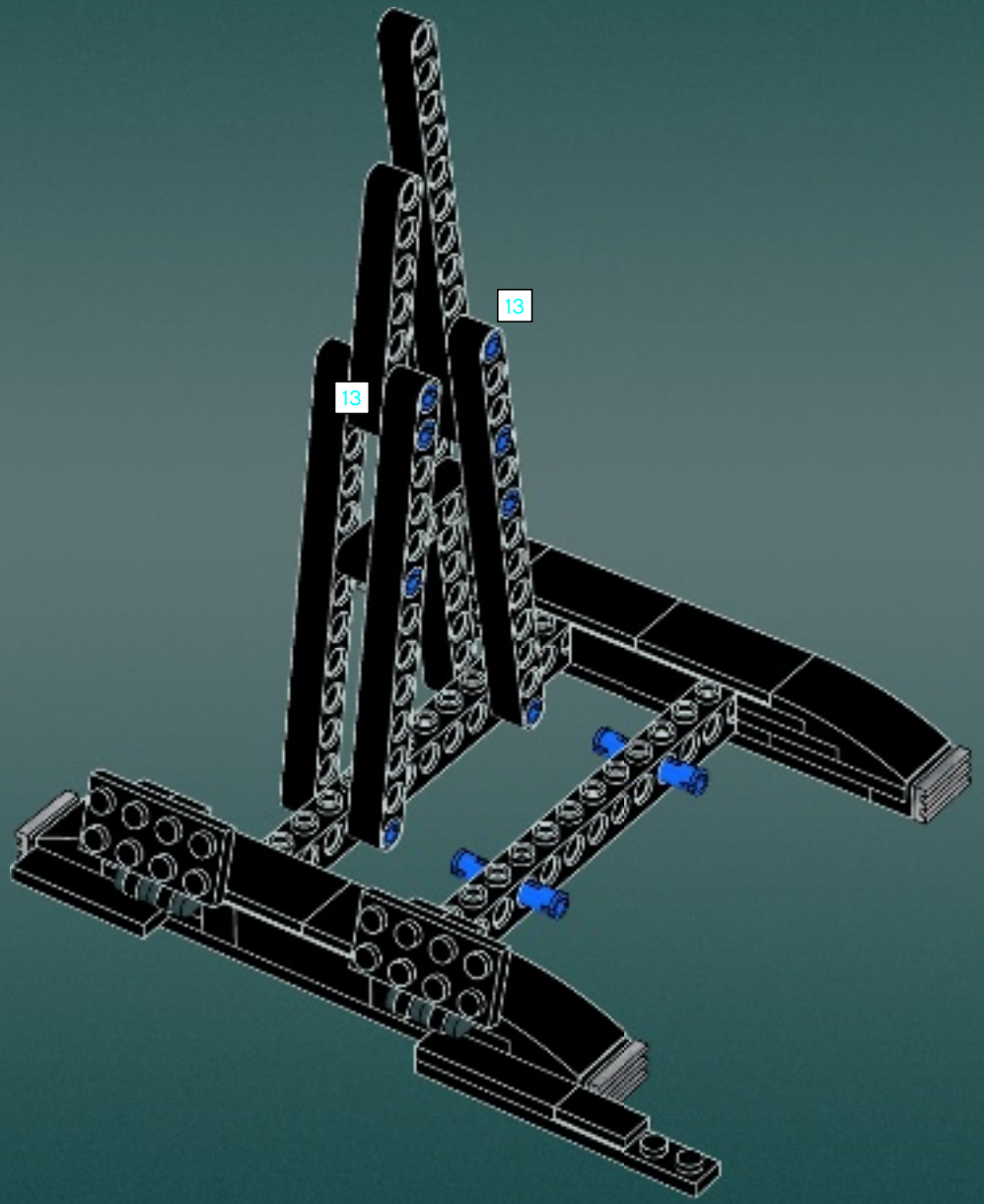

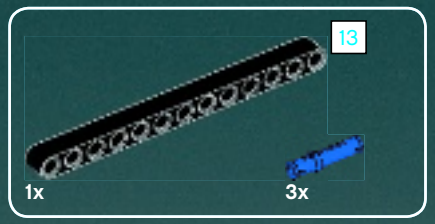

14

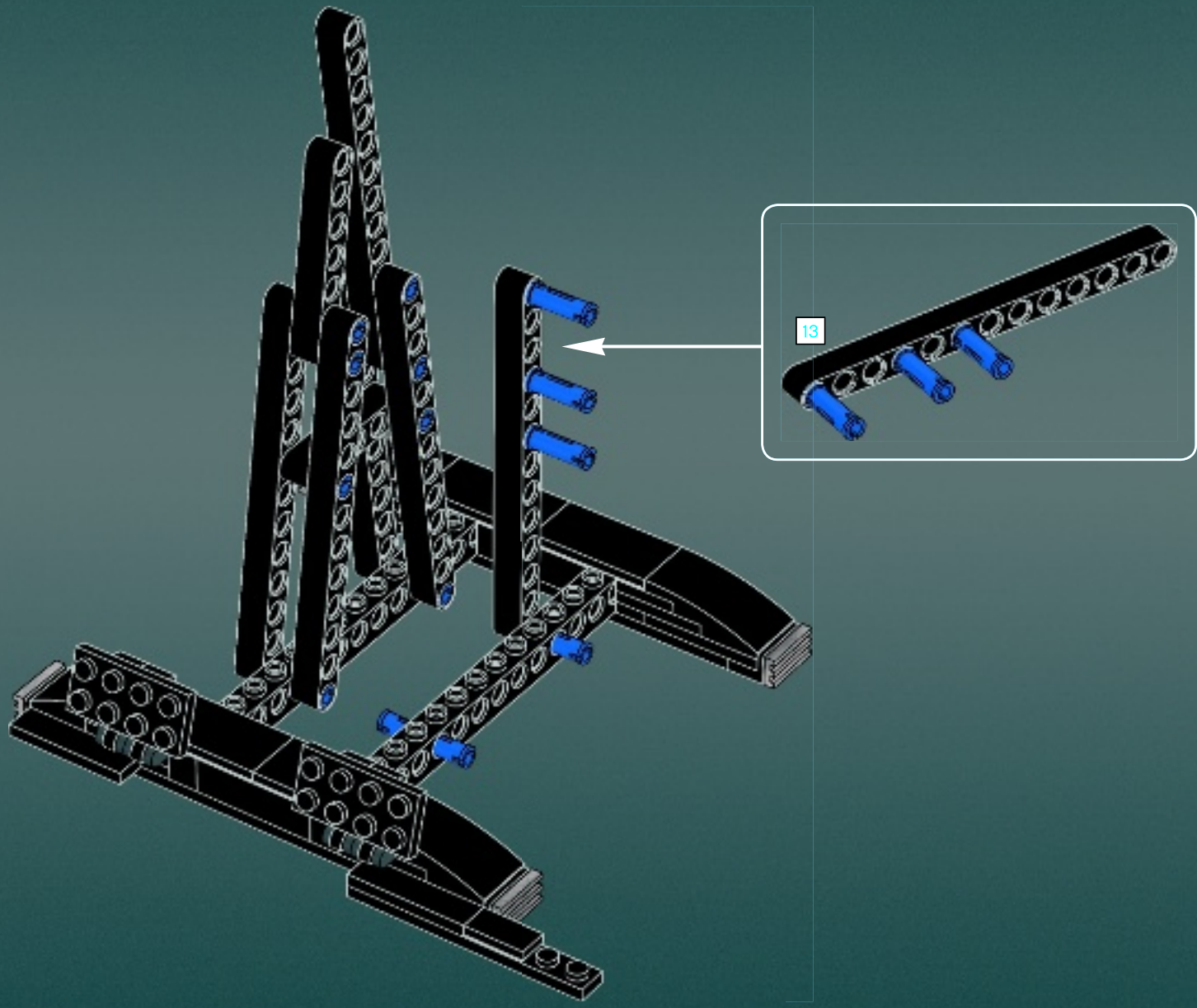

15

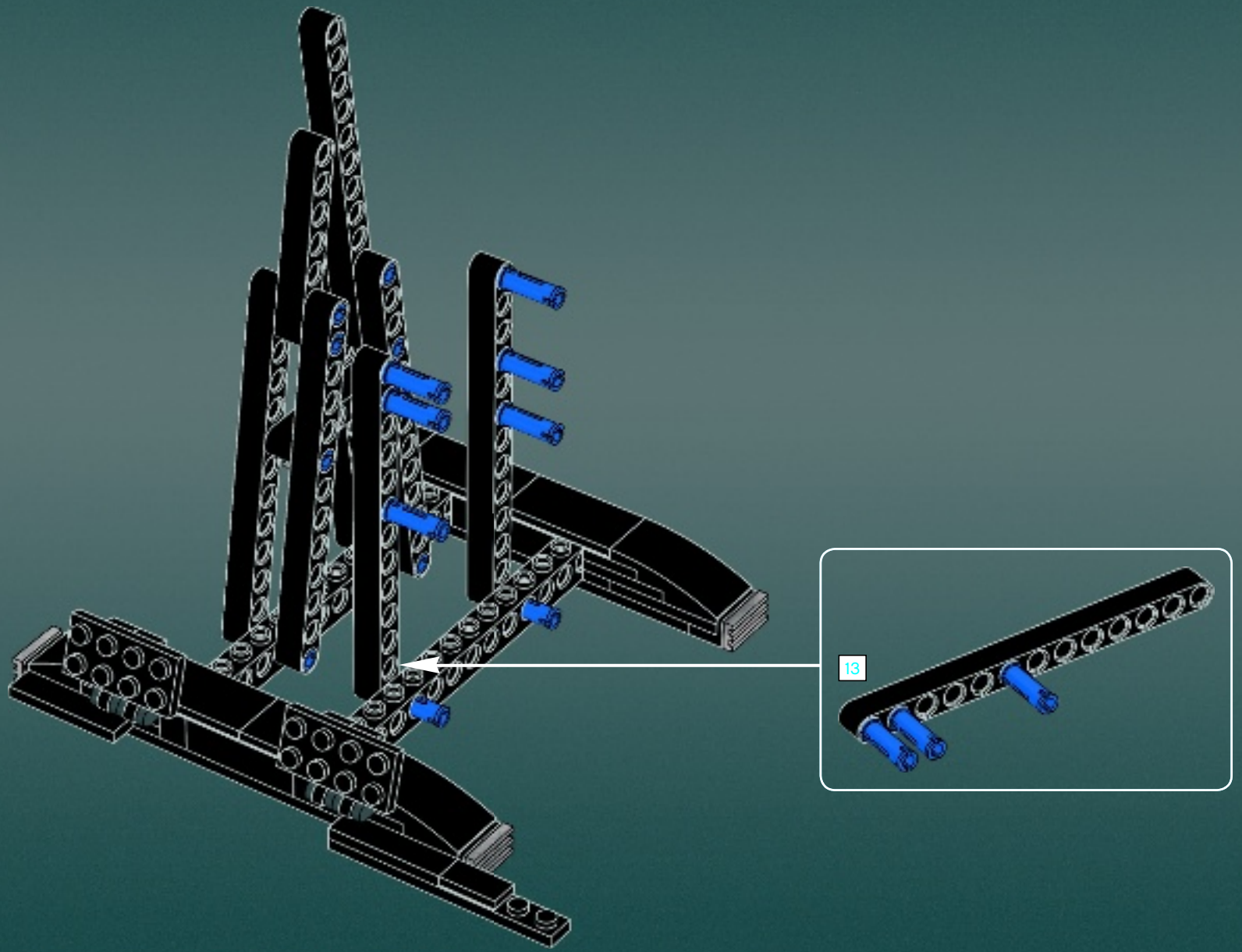

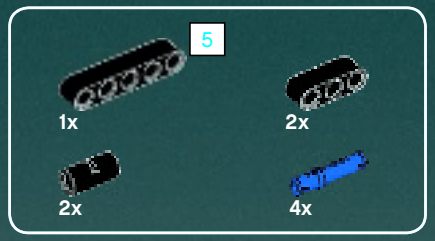

16

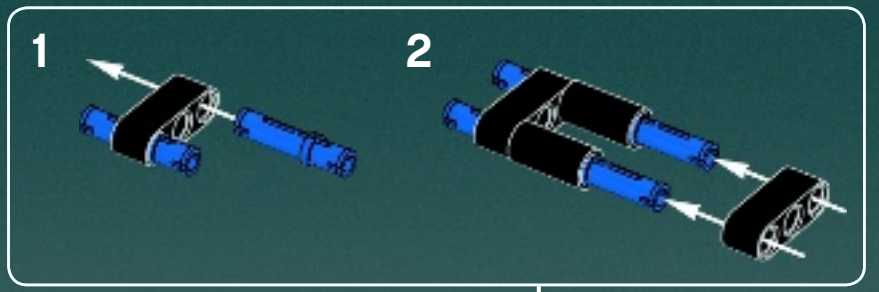

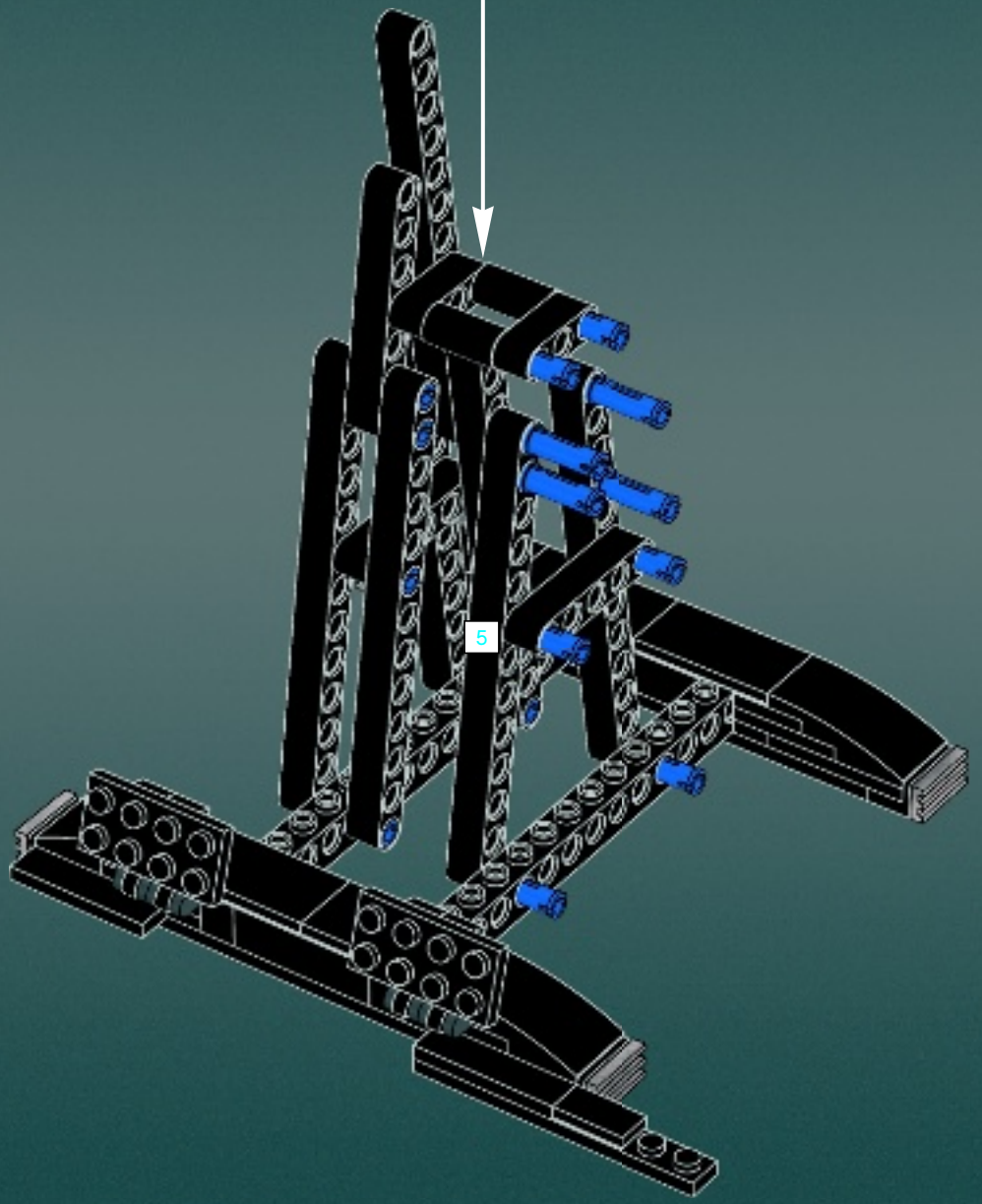

1

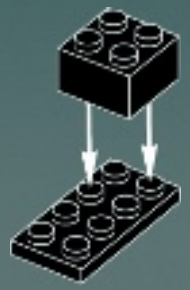

2

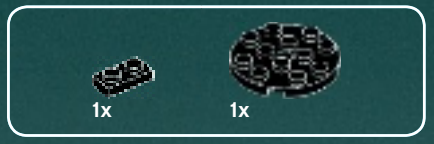

3

4

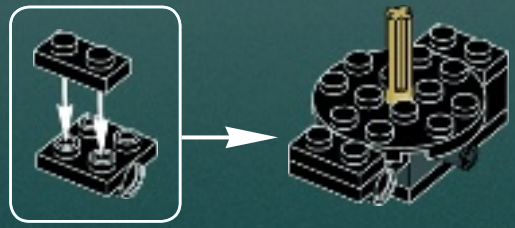

5

6

7

8

9

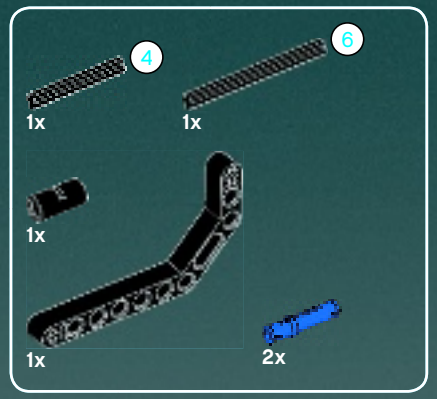

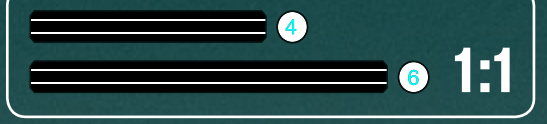

10

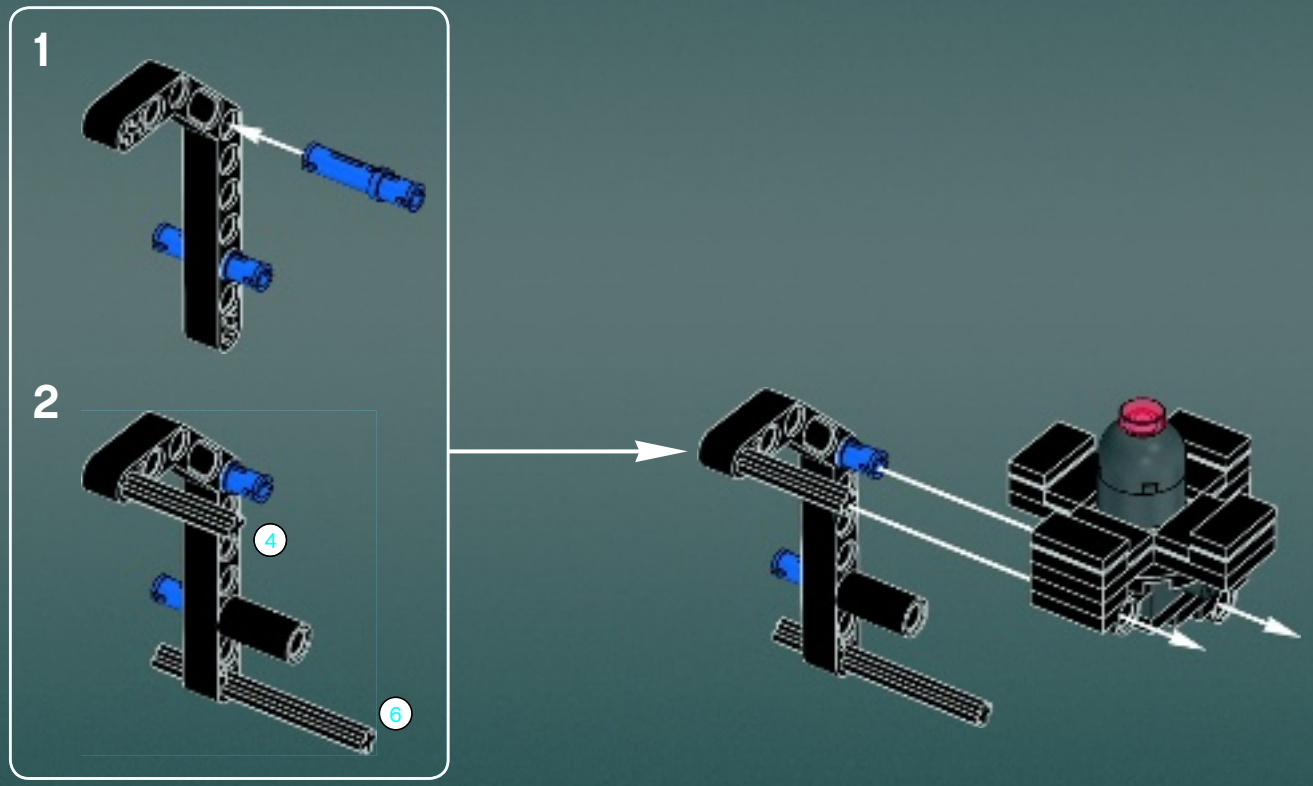

11

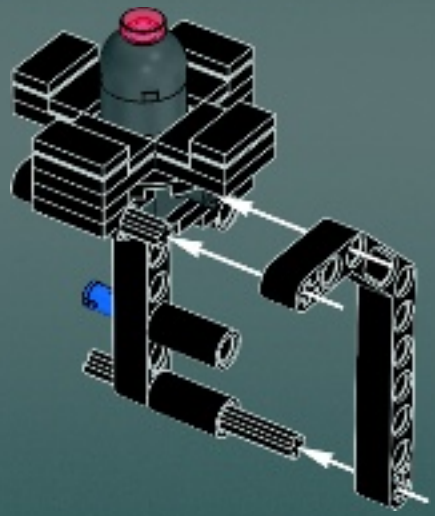

12

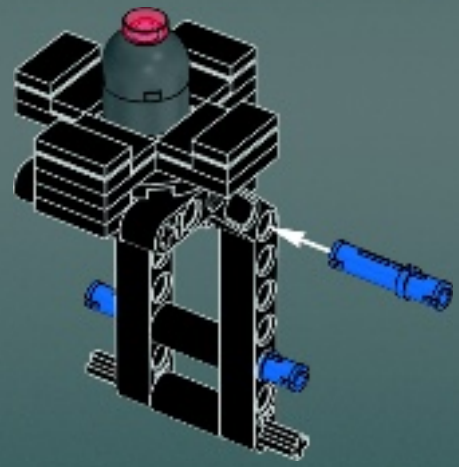

17

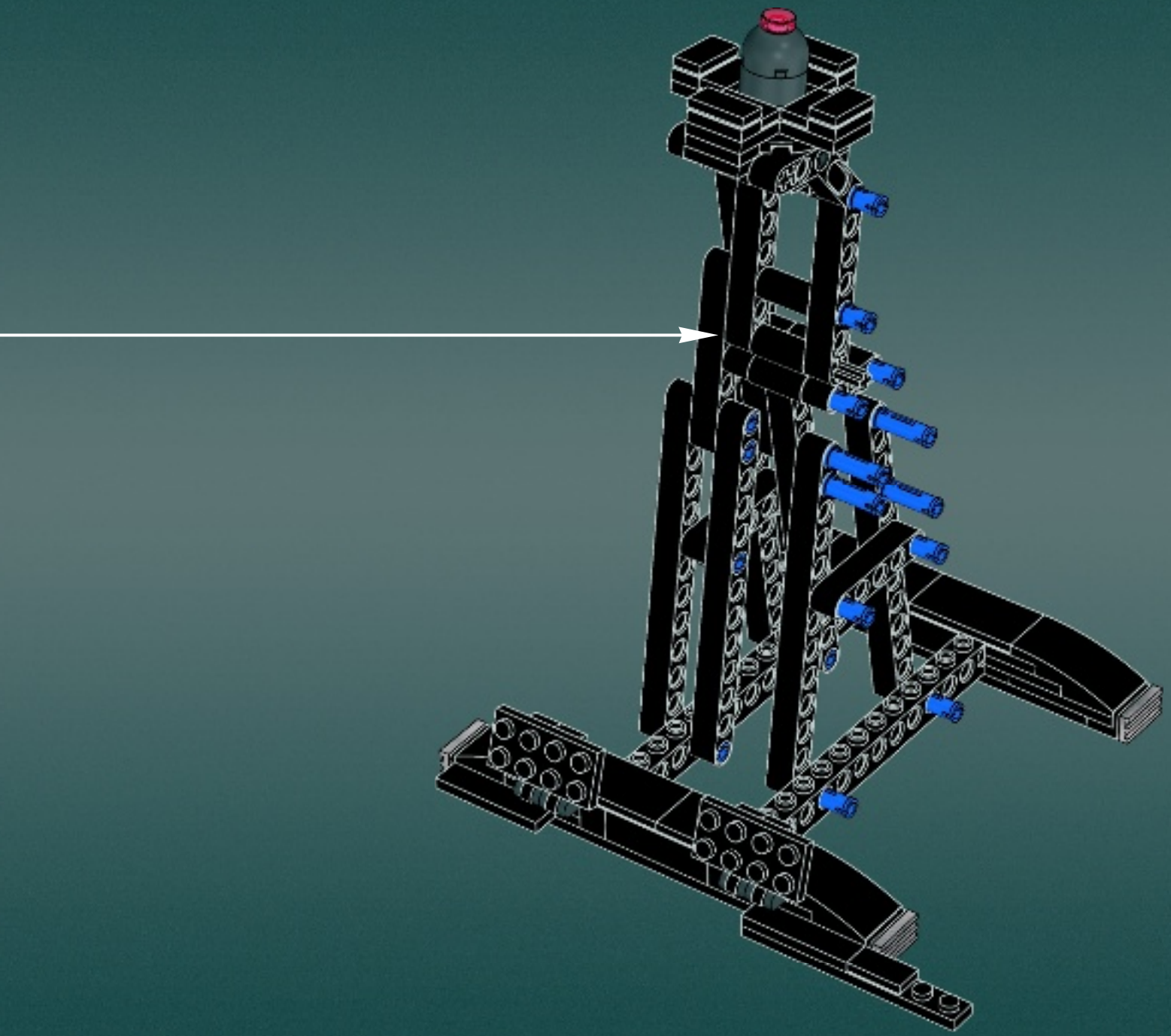

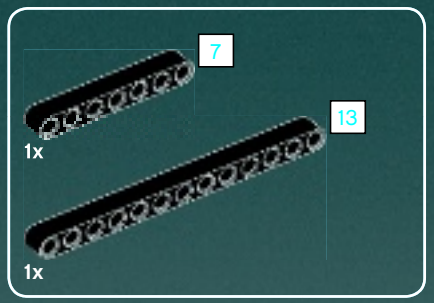

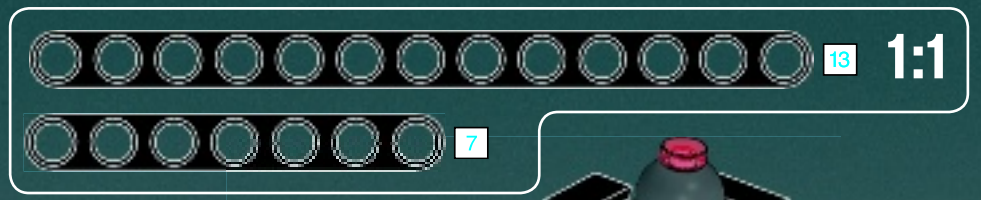

18

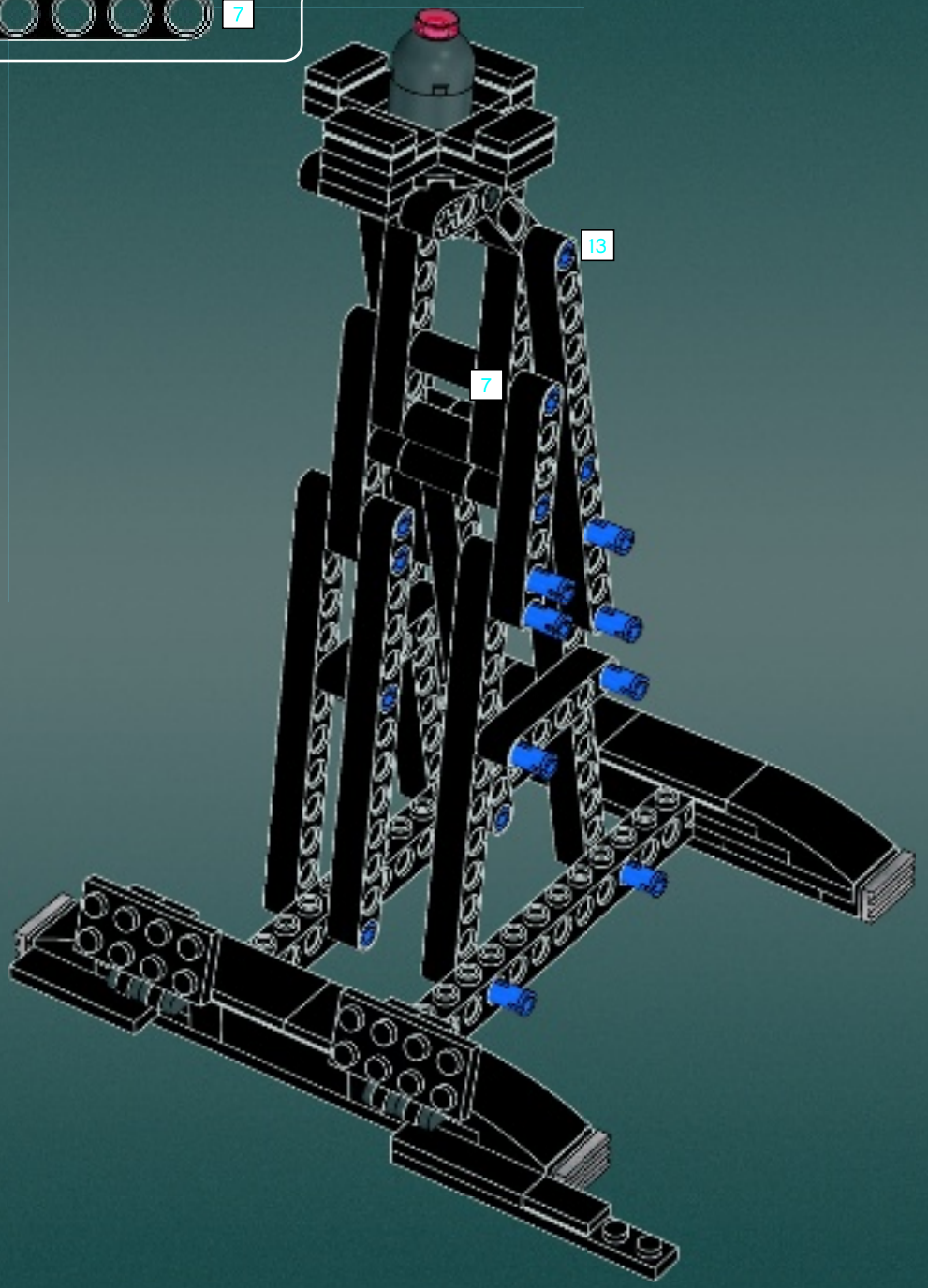

19

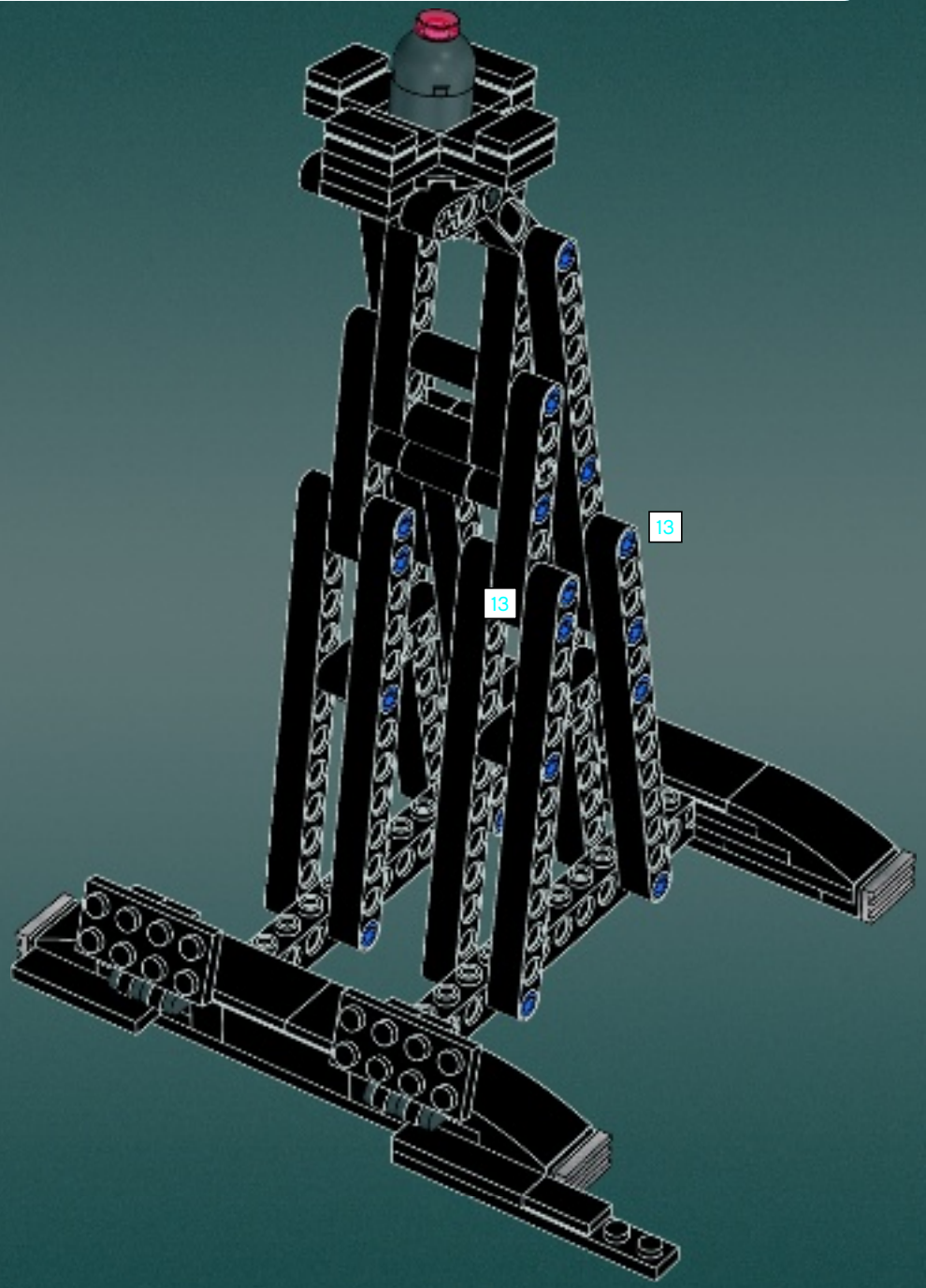

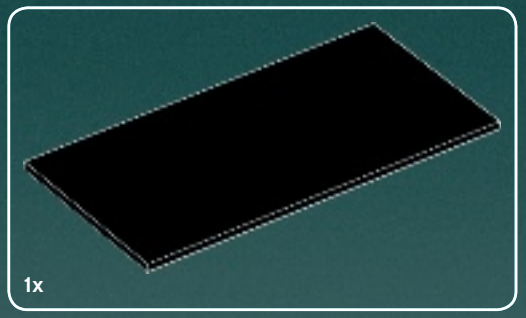

20

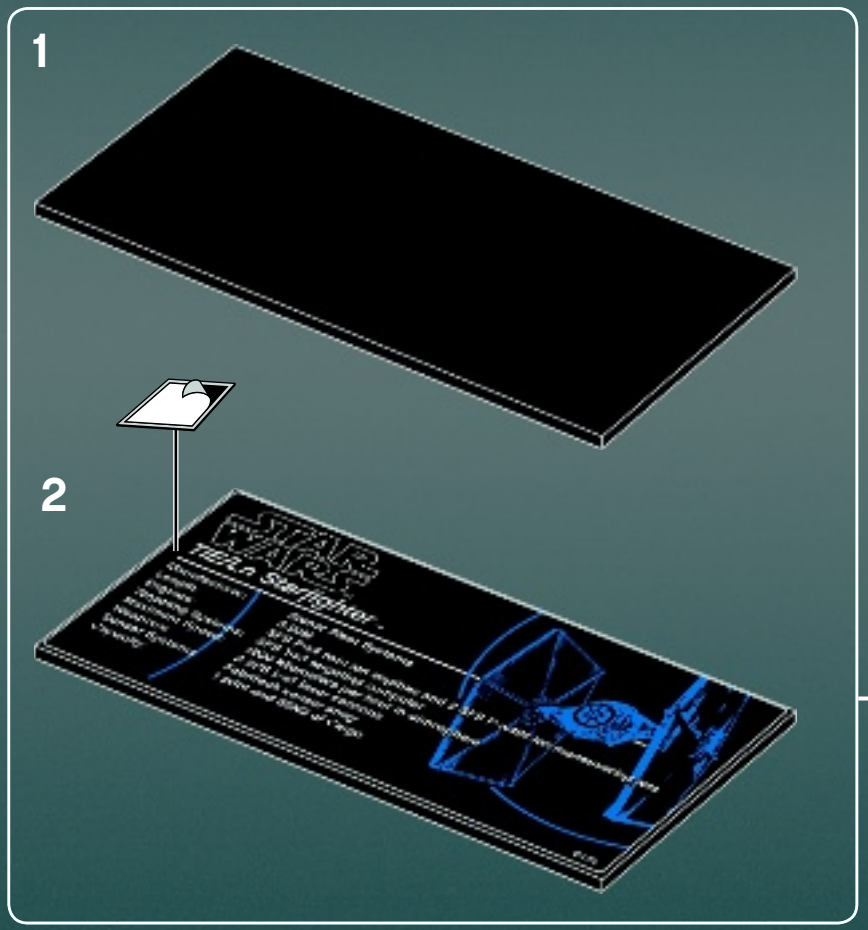

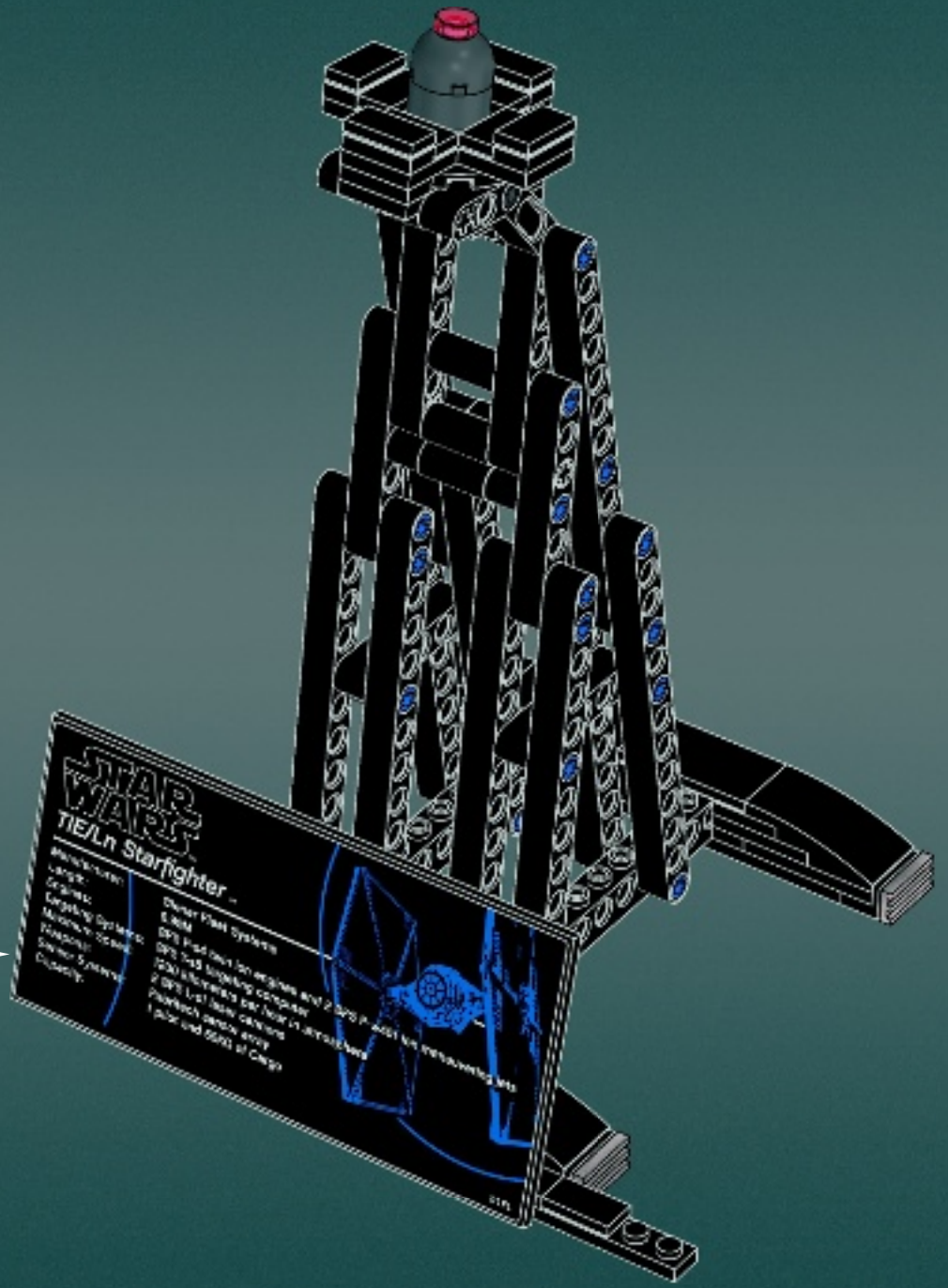

21

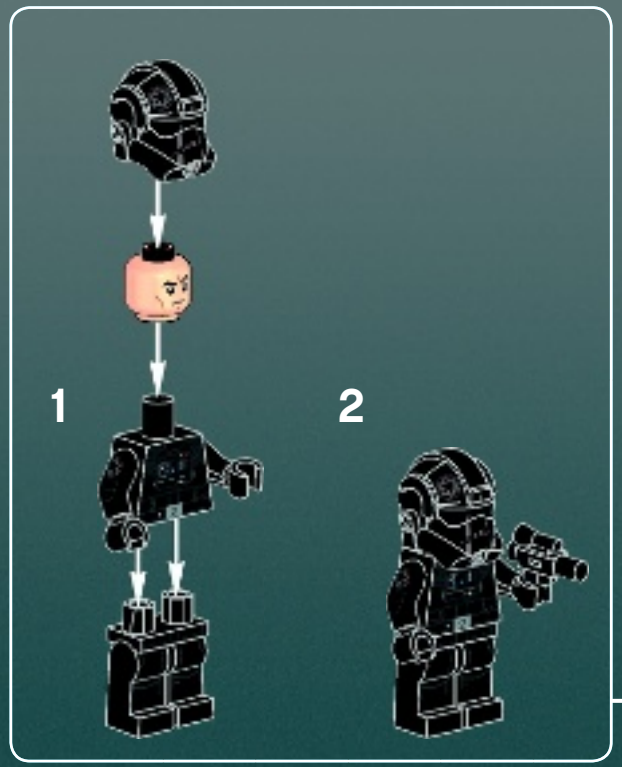

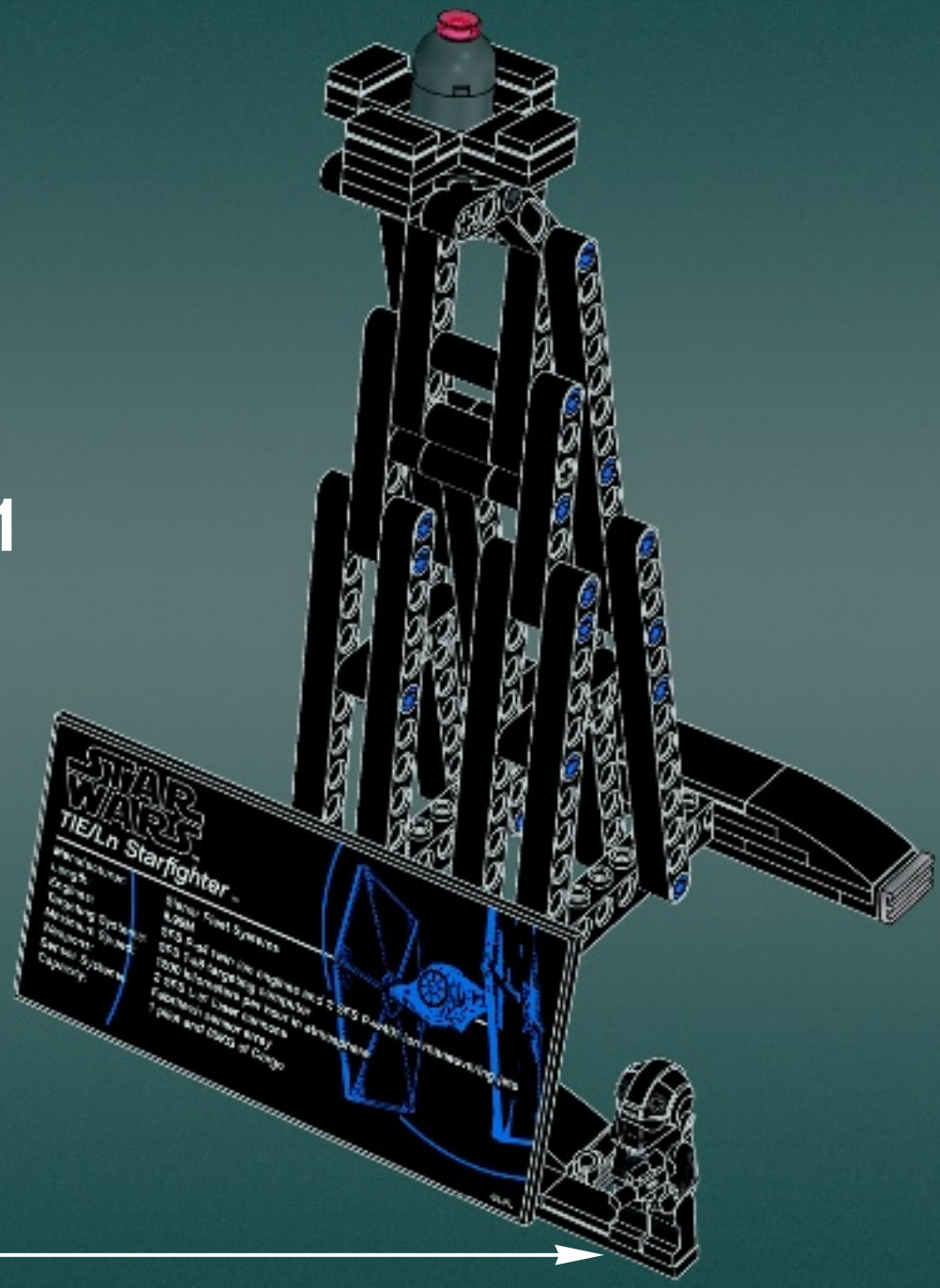

52

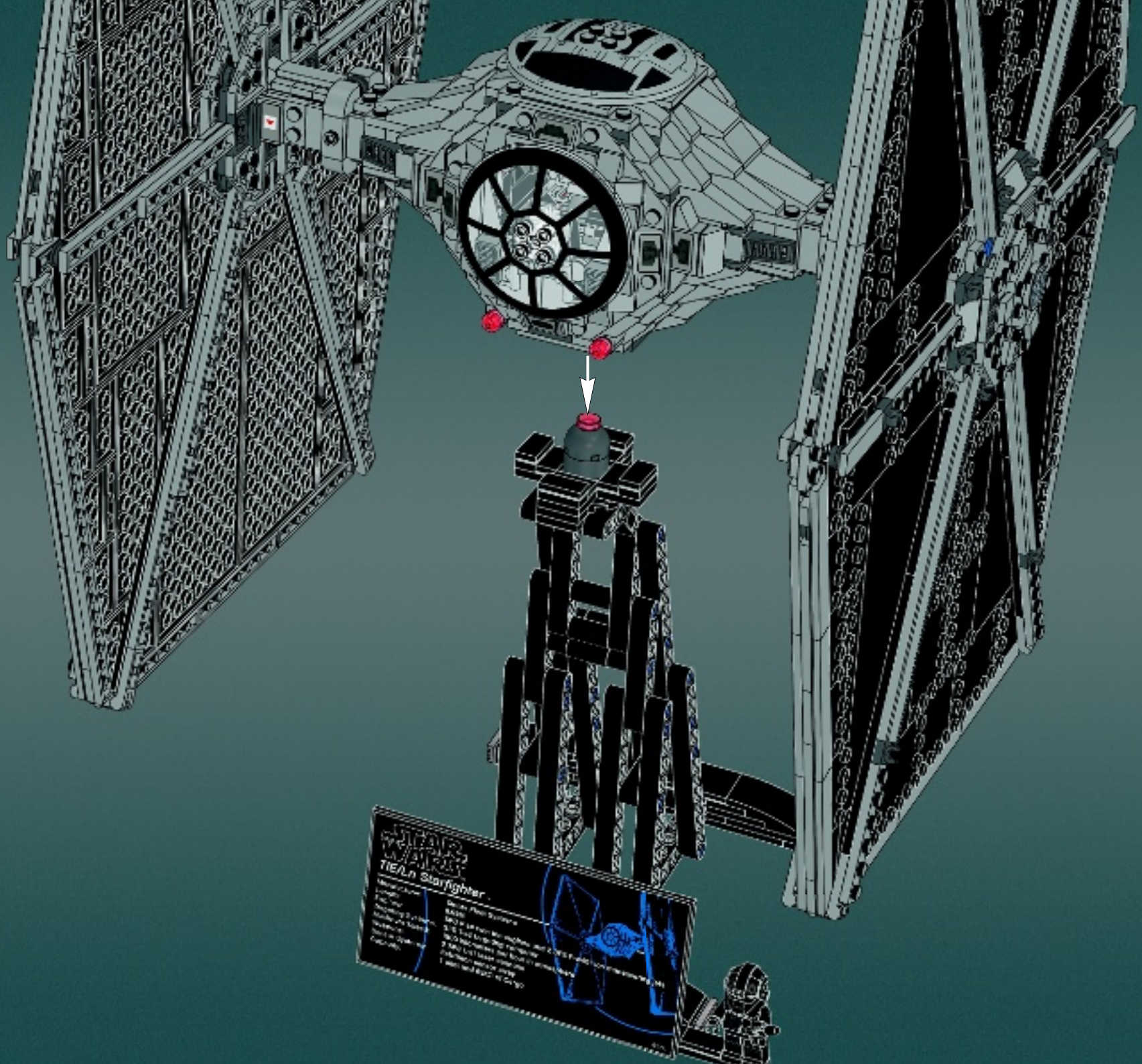

53

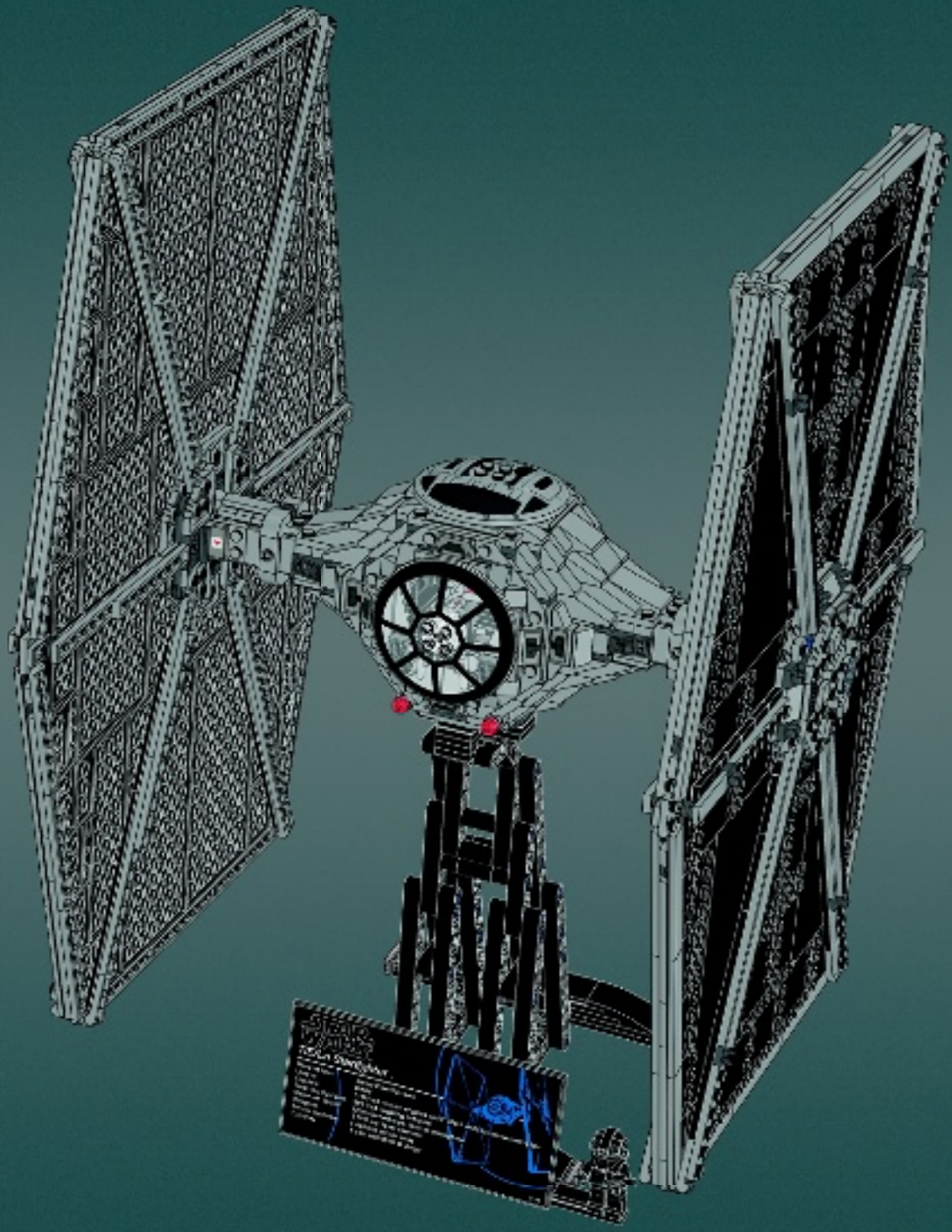

4x
4618876

10x
4113233

3x
4113988

32x
4570516

1x
4666579

1x
4666999

2x
301021

4x
623221

54x
302321

4x
6078641

1x
4142865

1x
6097123

4x
4619636

12x
302023

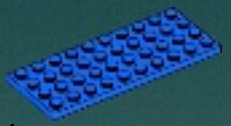
4x
303023

4x
241923

1x
4206482

24x
4514553

26x
242024

8x
4535740

10x
306926

4x
302226

4x
300526

1x
300326

4x
235726

2x
300126

2x
370326

2x
6069000

2x
303726

2x
6039869

4x
4647286

24x
6092585

10x
302326

20x
4565323

8x
362326

8x
4558170

5x
302126

8x
243126

32x
371026

4x
4560182

13x
302026

30x
6076678

20x
617926

1x
346026

24x
416226

40x
4100378

4x
303426

8x
4514845

8x
302926

2x
6001494

4x
302826

12x
6094066

9x
4603646

8x
6117973

4x
6020193

6x
4535739

2x
281726

8x
6052126

1x
3200126

44x
4161332

44x
4160869

1x
4515350

2x
4558209

1x
6102347

1x
6056685

1x
6102367

1x
4609050

2x
4142822

2x
4142135

2x
4495935

2x
4111998

10x
4522933

4x
4121715

4x
4526982

1x
370526

1x
370626

6x
4107736

4x
302228

1x
4143346

1x
6102510

2x
4646864

14x
3005741

1x
6024294

2x
4497943

6x
3005748

1x
4654448

8x
4529685

24x
4211214

4x
4211388

2x
4211393

4x
4211529

4x
4211705

24x
4521921

34x
4568637

12x
6093859

28x
4211437

8x
4211614

6x
4211436

2x
4211410

4x
6034676

12x
4211489

12x
4211488

2x
4211421

6x
4211570

2x
4509915

8x
6028813

8x
4211519

4x
4618874

2x
4211399

12x
4211415

13x
4211350

34x
6066097

29x
4211398

25x
4211414

14x
4211397

4x
4211413

6x
6065824

26x
4211429

2x
4558169

15x
4211356

8x
4599498

16x
4211395

17x
4211438

2x
4243797

12x
4211452

36x
4211481

66x
4211425

8x
4211406

20x
4514846

4x
4211360

4x
4211486

2x
6071229

1x
4541978

1x
6028812

2x
6089147

1x
4598526

8x
4654580

6x
4654582

1x
4211376

1x
4666449

28x
4515369

4x
6014615

4x
4613165

2x
4650260

1x
4211791

1x
4211794

2x
6052205

2x
4278273

8x
4507056

1x
6028015

16x
4211361

1x
6102505

5x
6094068

4x
4215513

4x
6071299

8x
4211658

2x
4514195

1x
4644102

8x
6094067

1x
4222047

8x
6102769

2x
4211629

2x
4211483

2x
4211807

2x
4211536

1x
4529240

1x
4161674

1x
4249139

1x
4211024

72x
4210635

18x
4211043

8x
4211001

2x
4211134

4x
4257526

28x
6071226

2x
6019987

18x
6000606

4x
4543086

4x
4521187

44x
4210633

4x
4212075

1x
4583688

14x
4540386

1x
4210749

Customer Service
Kundenservice
Service Consommateurs
Servicio Al Consumidor
LEGO.com/service or dial

: 00800 5346 5555
: 1-800-422-5346

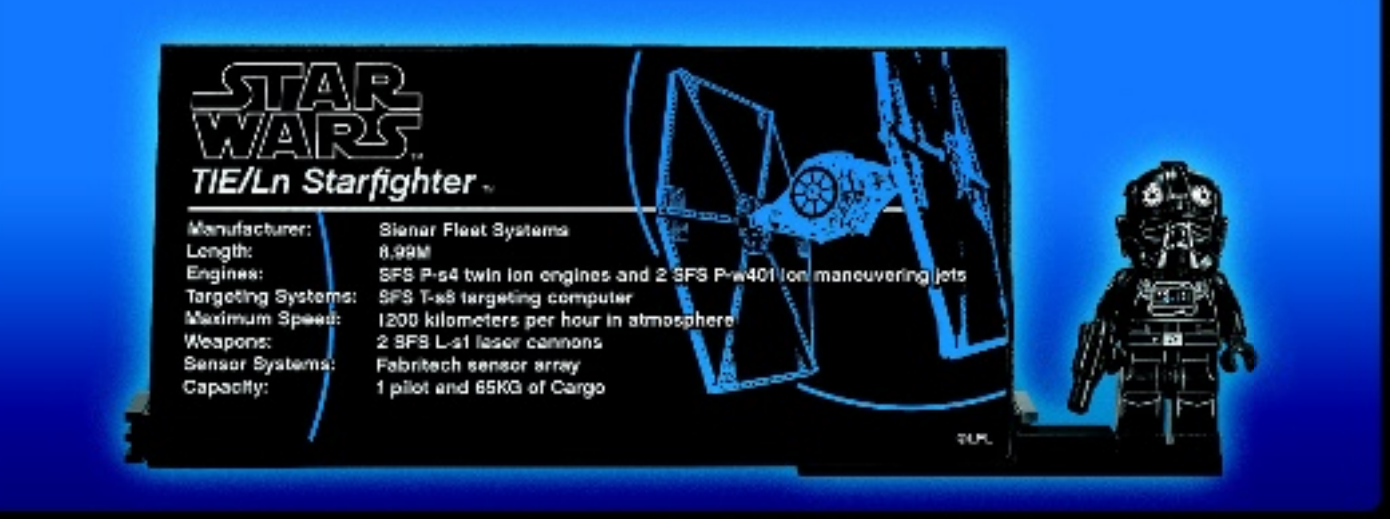
STAR WARS
TIE/Ln Starfighter
Manufacturer: Sienar Fleet Systems
Length: 6.99M
Engines: SFS P-s4 twin ion engines and 2 SFS P-w401 ion maneuvering jets
Targeting Systems: SFS T-s8 targeting computer
Maximum Speed: 1200 kilometers per hour in atmosphere
Weapons: 2 SFS L-s1 laser cannons
Sensor Systems: Fabritech sensor array
Capacity: 1 pilot and 65KG of Cargo

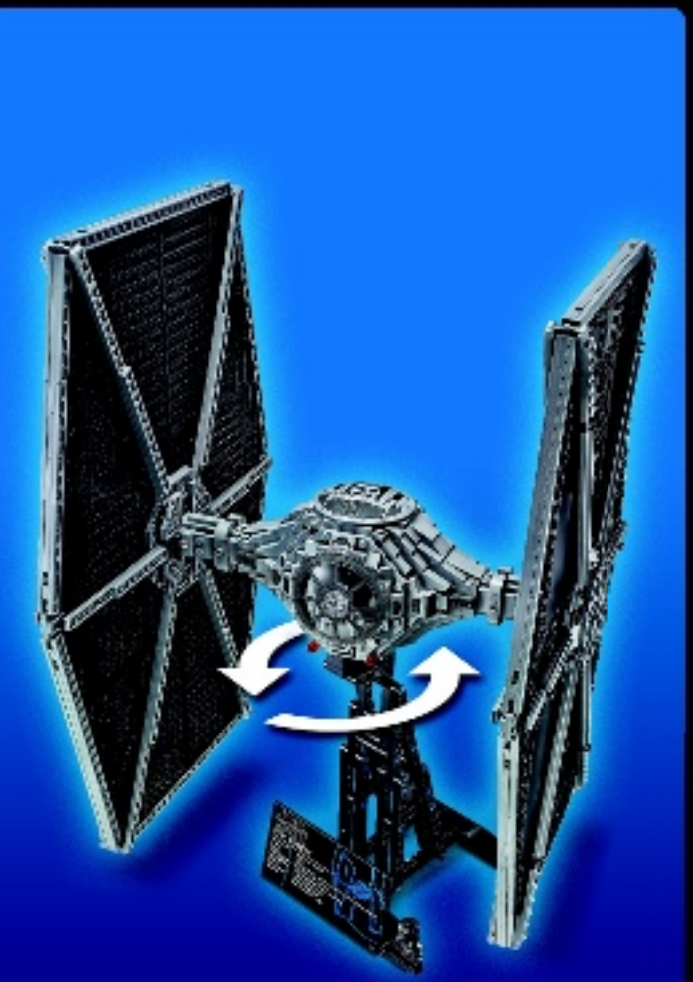

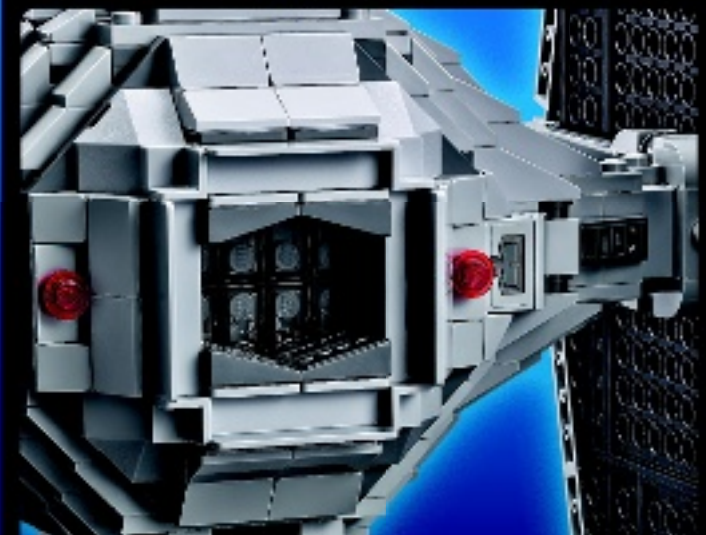

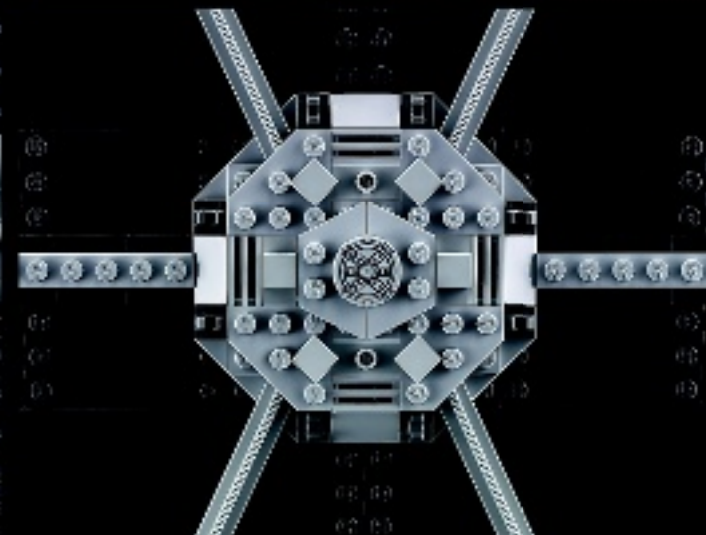

75060 Slave I™

LEGO.com/productfeedback

GEWINNE

Erzähle uns auf www.LEGO.com/productfeedback

etwas über die Erfahrungen, die du mit diesem LEGO® Set gemacht hast, und sichere dir die Chance auf einen coolen LEGO Preis!

GAGNE

Rends-toi sur www.LEGO.com/productfeedback

et donne-nous quelques commentaires sur ce produit LEGO® pour avoir une chance de gagner un prix LEGO !

GANA

Visita www.LEGO.com/productfeedback

y envíanos tu opinión acerca de este set LEGO®. ¡Participarás en el sorteo de un premio LEGO!

获取奖品

登录
www.LEGO.com/productfeedback

给出关于此乐高®套装的简短反馈，就有机会获得炫酷乐高奖品

경품 당첨 기회

www.LEGO.com/productfeedback

페이지로 이동하여 이 레고® 세트에 대한 간략한 피드백을 보내 주시고 멋진 레고 경품을 탈 수 있는 기회도 잡으십시오

ЗАПОЛНИ АНКЕТУ И ПОЛУЧИ ПРИЗ

Перейди по ссылке www.LEGO.com/productfeedback

ответь всего на несколько вопросов об этом наборе LEGO®, и у тебя появится шанс выиграть замечательный приз от компании LEGO.

LEGO and the LEGO logo are trademarks of the LEGO Group. ©2015 The LEGO Group.
© & ™ Lucasfilm Ltd.