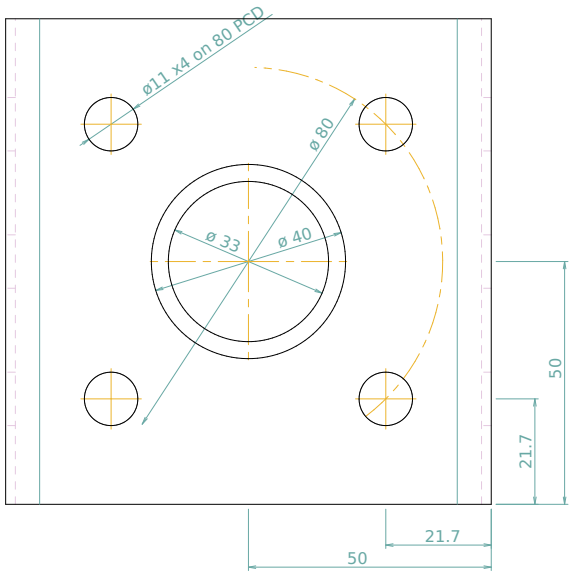

100 x 100 x 2 Square Tubing
100mm lenght

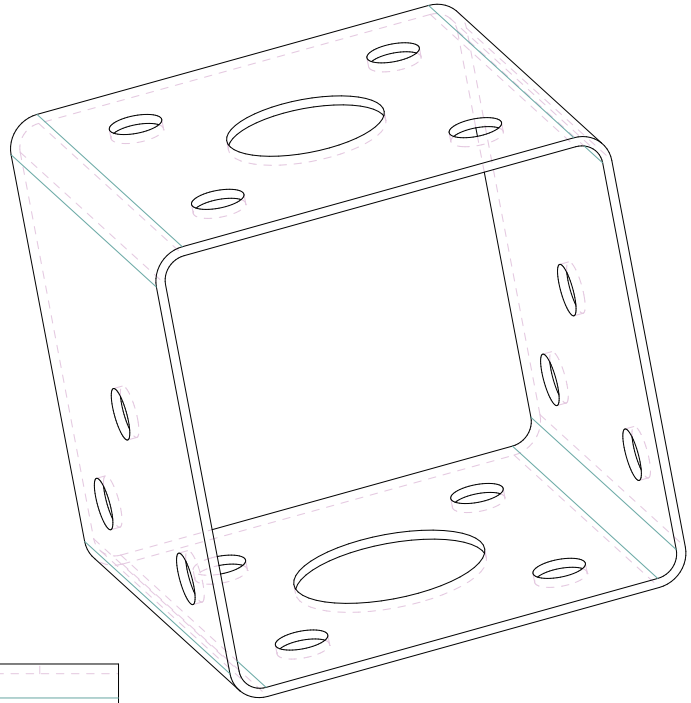

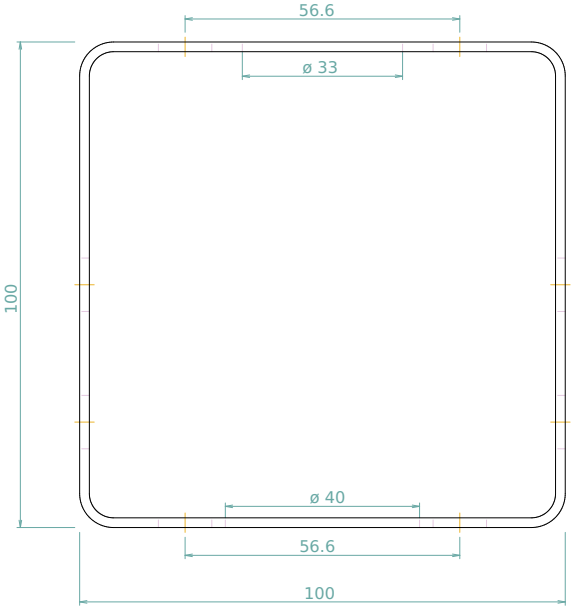

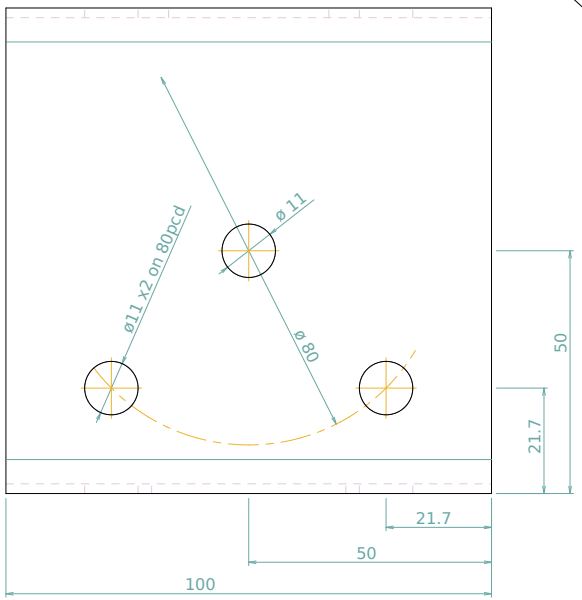

PROJECT: mk-IX Mounting Box	
Benico van der Westhuizen benicovdw@gmail.com 082 963 1263	Date: 2020.02.23
Name: Views on Mounting Box	