Objective:

In this project a compound reverted double-reduction, spur gearbox was designed with given parameters that need to be satisfied. The gearbox is meant to be a wind turbine to be connected to an electric power generator. The gear is meant to transmit power. The gearbox contains 4 gears, 3 shafts, 6 bearings, and keys for the gears. With the knowledge of design principles, the knowledge will be implemented and used to find the dimensions and values of the design. A drawing in Solidworks is needed to show the design.

Project HW 1

Friday, March 10, 2023 2:07 PM

$H = 12.5\,hp$, $n_{in} = 500\,rpm$

$n_{out} = 2{,}500\,rpm$

a. Determine the appropriate gearing ratios m_{G23} and m_{G45} such that $m_{G,tot} = m_{G23} \times m_{G45}$.

b. Determine the number of teeth on pinions and gears (2 pairs) to avoid interference by choosing appropriate diametral pitch (use only standard values) to satisfy the distance between the shafts d_s requirement.

$$d_s = \frac{d_2 + d_3}{2} = \frac{d_4 + d_5}{2} \Rightarrow \frac{N_2 + N_3}{2P_{23}} = \frac{N_4 + N_5}{2P_{45}}$$

c. Do force analysis on all gears and shafts.

a.) $m_{G_{Tot}} = \frac{n_{out}}{n_{in}} = \frac{2500}{500} \rightarrow m_{G_{Tot}} = 5 = (1.25)(4)$

$\boxed{m_{G23} = 1.25}$ $\boxed{m_{G45} = 4}$

b.) $N_{P23,min} = \frac{2(1)}{(1+2(1.25))\sin^2(20)}\left[1.25 + \sqrt{1.25^2 + (1+2(1.25))\sin^2(20)}\right]$

$N_{P23,min} = 12.96 \Rightarrow 25$

$N_{G23,max} = \frac{25^2 \sin^2(20) - 4(1)^2}{4(1) - 2(25)\sin^2(20)} \rightarrow N_{G23,max} = -63.01$

$\boxed{N_{2,act} = 25}$ $\boxed{N_{3,act} = 20}$

$N_{P45,min} = \frac{2(1)}{(1+2(2.5))\sin^2(20)}\left[2.5 + \sqrt{2.5^2 + (1+2(2.5))\sin^2(20)}\right]$

$N_{P45,min} = 15.44 \Rightarrow 64$

$N_{G45,max} = \frac{64^2 \sin^2(20) - 4(1)^2}{4(1) - 2(64)\sin^2(20)} \rightarrow N_{G23,max} = \underline{101.072}$

$\boxed{N_{4,act} = 64}$ $\boxed{N_{5,act} = 16}$

$d_s = \frac{25+20}{2(2.25)} = 10\,in$ $d_s = \frac{64+16}{2(4)} = 10\,in \rightarrow \boxed{d_s = 10\,in}$

$\boxed{\begin{aligned} P_{23} &= 2.25 \\ P_{45} &= 4 \end{aligned}}$

$d_2 = \frac{25}{2.25}$ $d_3 = \frac{20}{2.25}$ $d_4 = \frac{64}{4}$ $d_5 = \frac{16}{4}$

$\boxed{\begin{aligned} d_2 &= 11.11\ in \\ d_3 &= 8.88\ in \\ d_4 &= 16\ in \\ d_5 &= 4\ in \end{aligned}}$

$V_2 = \frac{\pi(11.11in)(500\frac{rev}{min})}{12} \rightarrow \underline{V_2 = 1454.3\ \frac{ft}{min}}$

$V_3 = \frac{\pi(8.88in)(625\frac{rev}{min})}{12} \rightarrow \underline{V_3 = 1454.3\ \frac{ft}{min}}$

$V_4 = \frac{\pi(16in)(625\frac{rev}{min})}{12} \rightarrow \underline{V_4 = 2617.99\ \frac{ft}{min}}$

$V_5 = \frac{\pi(4in)(2500\frac{rev}{min})}{12} \rightarrow \underline{V_5 = 2617.99\ \frac{ft}{min}}$

c.) 2

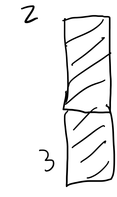

3

$W_{t_{23}} = 33000\left(\frac{12.5\,hp}{1454.3\,\frac{ft}{min}}\right)$

$\boxed{W_t = 283.64\ lb_f} = F_{32}^t$

$\cos 20 = \frac{283.64}{F_{32}} \rightarrow \boxed{F_{32} = 301.84\ lb_f}$

$F_{32}^r = 301.84 \sin 20$ $\boxed{F_{32}^r = 103.23\ lb_f}$

5

4

$W_{t_{45}} = 33000\left(\frac{12.5\,hp}{2617.99\,\frac{ft}{min}}\right)$

$\boxed{W_{t_{45}} = 157.56\ lb_f} = F_{54}^t$

$\cos 20 = \frac{157.56}{F_{54}} \rightarrow \boxed{F_{54} = 167.67\ lb_f}$

$F_{54}^r = 167.67 \sin 20$ $\boxed{F_{54}^r = 57.35\ lb_f}$

Project HW 2

Thursday, March 9, 2023 11:16 PM

Define the surface hardness for the 4 gears needed for compound reverted gear train. Use following date in design of gears:

- Gear material must be either Grade I or Grade II through hardened steel.
- All gears must survive at least 10^8 cycles with 99% reliability.
- Minimum factors of safety are 1.5 in bending and 1.2 in surface stresses. You can choose to use more than minimum required.
- Show all the work and calculations handwritten for Gear 2. Then, show all factors and results for gears 2, 3, 4, and 5 in tabular format.

$n_2 = 500$ rev/min
$n_3 = 625$ rev/min
$n_4 = 625$ rev/min
$n_5 = 2500$ rev/min

$F_{23} = \frac{9}{225}\text{in}$ $\quad K_o = 1$ $\quad Q_v = 5$

$\boxed{F_{23} = 4\text{in}}$

$B = 0.25(12-5)^{\frac{2}{3}} \rightarrow B = 0.915$

$A = 50 + 56(1-0.915) \rightarrow A = 54.76$

$K_v = \left(\frac{54.76 + \sqrt{1454.3}}{54.76}\right)^{0.915} \rightarrow K_v = 1.622$

$Y = 0.334$ $\quad K_s = 1.192\left(\frac{4\text{in}\sqrt{.334}}{2.25}\right)^{.0535} \rightarrow K_s = 1.194$

$C_{mc} = 1$ $\quad C_{pf} = \frac{4\text{in}}{10(8.88\text{in})} - 0.0375 + .0125(4\text{in}) \rightarrow C_{pf} = 0.0575$

$C_{pm} = 1$ $\quad C_e = 1$ $\quad C_{ma} = .127 + (.0158)(4) + -.930(10^{-4})4^2$

$C_{ma} = 0.1887$

$K_m = 1 + (1)(.0575(1) + (.1887)(1)) \rightarrow K_m = 1.246$

J (and Y_J) - Geometry factor for bending resistance – Spur Gears

$J = 0.325$

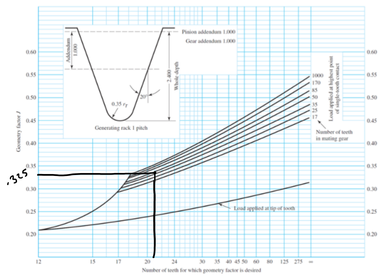

$I = \frac{\cos 20 \sin 20}{2(1)}\left(\frac{1.25}{1.25+1}\right)$

$I = 0.0893$

$C_p = 2300\sqrt{psi}$

$C_s = 1$

$K_T = 1$ $\quad K_R = 1$

$S_c = 349\,H_B + 34300\text{ psi}$ $\quad C_H = 1$

$Y_N = \frac{1.3558(10^8)^{-.0178} + 1.4431(10^8)^{-.0323}}{2} \rightarrow Y_N = 0.953$

$Z_N = \frac{1.4488(10^8)^{-.023} + 2.466(10^8)^{-.056}}{2} \rightarrow Z_N = 0.914$

$\sigma_c = 2300\sqrt{psi}\sqrt{(157.56)(1)(1.62)(1.194)\left(\frac{1.245}{11.11\text{in}(4)}\right)\left(\frac{1}{.0893}\right)}$

$\sigma_c = 22489.6\text{ psi} \rightarrow$

$22489.6 = \frac{322\,H_B + 29100\text{ psi}}{4}\left(\frac{0.914}{1}\right)\left(\frac{1}{1}\right) \rightarrow \boxed{H_B = 215.85}$

Gear 2			
Wt (lbf)	157.56	Cp (psi)	2300
Pd (in)		Cf	1
F (in)	4	St (psi)	1320.354
dP (in)	8.88	Sc (psi)	109630.8
Ko	1	Yn	0.952562
Kv	1.621629	Zn	0.913461
Ks	1.193727	KT	1
Km	1.246257	KR	1
Kb	1	CH	1
J	0.34	SF	2
I	0.089238	SH	4
Hb	**215.8477**		

Gear 3			
Wt (lbf)	157.56	Cp (psi)	2300
Pd (in)		Cf	1
F (in)	4	St (psi)	1401.504
dP (in)	8.88	Sc (psi)	122240.6
Ko	1	Yn	0.952562
Kv	1.621629	Zn	0.913461
Ks	1.192559	KT	1
Km	1.246257	KR	1
Kb	1	CH	1
J	0.32	SF	2
I	0.089238	SH	4
Hb	**251.9787**		

Gear 4			
Wt (lbf)	157.56	Cp	2300
Pd (in)		Cf	1
F (in)	3	St	2817.735
dP (in)	4	Sc	103209.1
Ko	1	Yn	0.952562
Kv	1.828524	Zn	0.913461
Ks	1.147232	KT	1
Km	1.248563	KR	1
Kb	1	CH	1
J	0.41	SF	2
I	0.128503	SH	4.5
Hb	**197.4474**		

Gear 5			
Wt (lbf)	157.56	Cp	2300
Pd (in)		Cf	1
F (in)	3	St	3645.805
dP (in)	8.88	Sc	114032
Ko	1	Yn	0.952562
Kv	1.621629	Zn	0.913461
Ks	1.139862	KT	1
Km	1.207347	KR	1
Kb	1	CH	1
J	0.27	SF	2
I	0.128503	SH	4.5
Hb	**228.4584**		

Problem 3

Sheet 1

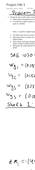

SAE 1050 HR bar stock, Sy=550 MPa

$w_{y_1} = (9.81)(\frac{N}{kg})(5.4\frac{kg}{m}) = 53.1\frac{N}{m}$

$w_{y_2} = (9.81)(\frac{N}{kg})(1.6\frac{kg}{m}) = 15.7\frac{N}{m}$

$w_{y_3} = (9.81)(\frac{N}{kg})(1.6\frac{kg}{m}) = 15.7\frac{N}{m}$

$w_{y_4} = (9.81)(\frac{N}{kg})(1.6\frac{kg}{m}) = 15.7\frac{N}{m}$

$F_{y_1} = 2(9.81)(\frac{N}{kg})(1.6\frac{kg}{m})(0.5m) = 15.7N$

$F_{y_2} = 2(9.81)(\frac{N}{kg})(1.6\frac{kg}{m})(0.5m) = 15.7N$

$F_{y_3} = 2(9.81)(\frac{N}{kg})(1.6\frac{kg}{m})(0.5m) = 15.7N$

$F_{y_4} = 2(9.81)(\frac{N}{kg})(1.6\frac{kg}{m})(0.5m) = 15.7N$

Sheet 2

$\Sigma M_z = (15.7N)(0.5m) + (15.7N)(1.5m) + (15.7N)(2.5m) + (15.7N)(3.5m) = 0$

$M_z = 157.4\ Nm$

$\Sigma F_y = 15.7N + 15.7N + 15.7N + 15.7N = 0$

$F_y = 62.8\ N$

$\Sigma F_z = 0$

$F_z = 0\ N$

$F_{res} = 62.8\ N$

$M_{res} = 157.4\ Nm$

$\Sigma F_x = 0$

$F_x = 0\ N$

$\Sigma M_x = 0$

$M_x = 0\ Nm$

$\Sigma M_y = 0$

$M_y = 0\ Nm$

$F_{res} = 62.8\ N$

$M_{res} = 157.4\ Nm$

Sheet 3

$\Sigma M_z = (15.7N)(1.5m) + (15.7N)(2.5m) + (15.7N)(3.5m) = 0$

$M_z = 157.4\ Nm$

$\Sigma F_y = 15.7N + 15.7N + 15.7N = 0$

$F_y = 47.1\ N$

$\Sigma F_z = 0$

$F_z = 0\ N$

$F_{res} = 47.1\ N$

$M_{res} = 157.4\ Nm$

$\Sigma F_x = 0$

$F_x = 0\ N$

$\Sigma M_x = 0$

$M_x = 0\ Nm$

$\Sigma M_y = 0$

$M_y = 0\ Nm$

$F_{res} = 47.1\ N$

$M_{res} = 157.4\ Nm$

Sheet 4

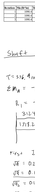

$\Sigma M_z = (15.7N)(0.5m) + (15.7N)(1.5m) + (15.7N)(2.5m) + (15.7N)(3.5m) = 0$

$M_z = 157.4\ Nm$

$\Sigma F_y = 15.7N + 15.7N + 15.7N + 15.7N = 0$

$F_y = 62.8\ N$

$\Sigma F_z = 0$

$F_z = 0\ N$

$F_{res} = 62.8\ N$

$M_{res} = 157.4\ Nm$

$\Sigma F_x = 0$

$F_x = 0\ N$

$\Sigma M_x = 0$

$M_x = 0\ Nm$

$\Sigma M_y = 0$

$M_y = 0\ Nm$

$F_{res} = 62.8\ N$

$M_{res} = 157.4\ Nm$

$\sigma_A = (-145.7)\frac{N}{m^2}(\frac{1}{0.25m})^2 \Rightarrow \sigma_A = 2913.4\ kPa \quad \sigma_A = 11.79\ ksi$

$T = 157.4\ Nm(\frac{1}{2})$

$T = 78.7\ Nm$

$\tau_A = \frac{T r_o}{J} = \frac{(78.7Nm)(0.125m)}{\frac{\pi}{2}(0.125m)^4} = 1604.2\ kPa \quad \tau_A = 1.604\ MPa$

$\sigma_A = 11.79\ ksi, \tau_A = 1.604\ MPa$

First iteration guess: $K_t = 2.2$, $n_{d_1} = 1.5$

$\sigma_a = \frac{K_t \sigma_A}{n_{d_1}} = \frac{(2.2)(11.79ksi)}{1.5} = 16.49\ ksi$

$\tau_a = \frac{K_t \tau_A}{n_{d_1}} = \frac{(2.2)(1.604MPa)}{1.5} = 2.35\ MPa$

$\frac{d}{D} = 0.5$

$\frac{r}{d} = 0.14 \rightarrow (0.14)(0.5in) = 0.07in$

$\sigma_a = (16.49ksi)(\frac{1}{1.0in})^{1/2} = 16.49\ ksi$

$\tau_a = (2.35MPa)(\frac{1}{1.0in})^{1/2} = 2.35\ MPa$

$\sigma_m = (11.79ksi)(\frac{1}{1.0in})^{1/2} = 11.79\ ksi$

$\tau_m = (1.604MPa)(\frac{1}{1.0in})^{1/2} = 1.604\ MPa$

$\frac{1}{S_e} = \frac{\sigma_a}{S_{ef}} + \frac{\sigma_m}{S_y} \Rightarrow \frac{1}{S_e} = \frac{16.49ksi}{16.49ksi} + \frac{11.79ksi}{55.0ksi} \Rightarrow S_e = 0.871\ in$

$\frac{1}{S_s} = \frac{\tau_a}{S_{sf}} + \frac{\tau_m}{S_{sy}} \Rightarrow \frac{1}{S_s} = \frac{2.35MPa}{16.49MPa} + \frac{1.604MPa}{27.5MPa} \Rightarrow S_s = 0.871\ in$

$\frac{1}{S_s} = 0.871in$

Shaft Design Table #1											
Revision	Date Rev	Sheet Rev	Sheet #	σ_a	τ_a	σ_m	τ_m	S_e	S_s	S_{ef}	S_{sf}
1	1/24/2012	1	1	2.91	1.60	11.79	1.60	0.87	0.87	16.49	2.35
2	1/24/2012	1	2	2.91	1.60	11.79	1.60	0.87	0.87	16.49	2.35
3	1/24/2012	1	3	2.91	1.60	11.79	1.60	0.87	0.87	16.49	2.35
4	1/24/2012	1	4	2.91	1.60	11.79	1.60	0.87	0.87	16.49	2.35

Sheet 5

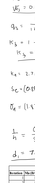

$\Sigma M_z = (286.6lbs)(2.5in) + (6.6lbs)(6.5in) = 0$

$M_z = 1108.5\ lbin$

$\Sigma F_y = 286.6lbs + 6.6lbs = 0$

$F_y = 293.2\ lbs$

$\Sigma F_z = 0$

$F_z = 0\ lbs$

$F_{res} = 293.2\ lbs$

$M_{res} = 1108.5\ lbin$

$\Sigma F_x = 0$

$F_x = 0\ lbs$

$\Sigma M_x = 0$

$M_x = 0\ lbin$

$\Sigma M_y = 0$

$M_y = 0\ lbin$

$F_{res} = 293.2\ lbs$

$M_{res} = 1108.5\ lbin$

$\sigma_A = (-293.2)\frac{lbs}{in^2}(\frac{1}{0.25in})^2 \Rightarrow \sigma_A = 4692.8\ psi \quad \sigma_A = 4.69\ ksi$

$T = 1108.5\ lbin(\frac{1}{2})$

$T = 554.3\ lbin$

$\tau_A = \frac{T r_o}{J} = \frac{(554.3lbin)(0.125in)}{\frac{\pi}{2}(0.125in)^4} = 18.09\ ksi \quad \tau_A = 18.09\ ksi$

$\sigma_A = 4.69\ ksi, \tau_A = 18.09\ ksi$

First iteration guess: $\frac{d}{D} = 0.5$, $K_t = 2.14$, $n_{d_1} = 3$

$\sigma_a = \frac{K_t \sigma_A}{n_{d_1}} = \frac{(2.14)(4.69ksi)}{3} = 10.03\ ksi$

$\tau_a = \frac{K_t \tau_A}{n_{d_1}} = \frac{(2.14)(18.09ksi)}{3} = 12.91\ ksi$

$\frac{d}{D} = 0.5$

$\frac{r}{d} = 0.14 \rightarrow (0.14)(0.5in) = 0.07in$

$\sigma_a = (10.03ksi)(\frac{1}{1.0in})^{1/2} = 10.03\ ksi$

$\tau_a = (12.91ksi)(\frac{1}{1.0in})^{1/2} = 12.91\ ksi$

$\sigma_m = (4.69ksi)(\frac{1}{1.0in})^{1/2} = 4.69\ ksi$

$\tau_m = (18.09ksi)(\frac{1}{1.0in})^{1/2} = 18.09\ ksi$

$\frac{1}{S_e} = \frac{\sigma_a}{S_{ef}} + \frac{\sigma_m}{S_y} \Rightarrow \frac{1}{S_e} = \frac{10.03ksi}{16.49ksi} + \frac{4.69ksi}{55.0ksi} \Rightarrow S_e = 0.609\ in$

$\frac{1}{S_s} = \frac{\tau_a}{S_{sf}} + \frac{\tau_m}{S_{sy}} \Rightarrow \frac{1}{S_s} = \frac{12.91ksi}{16.49ksi} + \frac{18.09ksi}{27.5ksi} \Rightarrow S_s = 0.609\ in$

$\frac{1}{S_s} = 0.609in$

Shaft Design Table #1											
Revision	Date Rev	Sheet Rev	Sheet #	σ_a	τ_a	σ_m	τ_m	S_e	S_s	S_{ef}	S_{sf}
1	1/24/2012	1	1	10.03	12.91	4.69	18.09	0.61	0.61	16.49	16.49
2	1/24/2012	1	2	10.03	12.91	4.69	18.09	0.61	0.61	16.49	16.49
3	1/24/2012	1	3	10.03	12.91	4.69	18.09	0.61	0.61	16.49	16.49
4	1/24/2012	1	4	10.03	12.91	4.69	18.09	0.61	0.61	16.49	16.49

Sheet 6

$\Sigma M_z = (286.6lbs)(2.5in) + (6.6lbs)(6.5in) = 0$

$M_z = 1108.5\ lbin$

$\Sigma F_y = 286.6lbs + 6.6lbs = 0$

$F_y = 293.2\ lbs$

$\Sigma F_z = 0$

$F_z = 0\ lbs$

$F_{res} = 293.2\ lbs$

$M_{res} = 1108.5\ lbin$

$\Sigma F_x = 0$

$F_x = 0\ lbs$

$\Sigma M_x = 0$

$M_x = 0\ lbin$

$\Sigma M_y = 0$

$M_y = 0\ lbin$

$F_{res} = 293.2\ lbs$

$M_{res} = 1108.5\ lbin$

$\sigma_A = (-293.2)\frac{lbs}{in^2}(\frac{1}{0.25in})^2 \Rightarrow \sigma_A = 4692.8\ psi \quad \sigma_A = 4.69\ ksi$

$T = 1108.5\ lbin(\frac{1}{2})$

$T = 554.3\ lbin$

$\tau_A = \frac{T r_o}{J} = \frac{(554.3lbin)(0.125in)}{\frac{\pi}{2}(0.125in)^4} = 18.09\ ksi \quad \tau_A = 18.09\ ksi$

$\sigma_A = 4.69\ ksi, \tau_A = 18.09\ ksi$

First iteration guess: $\frac{d}{D} = 0.5$, $K_t = 2.14$, $n_{d_1} = 3$

$\sigma_a = \frac{K_t \sigma_A}{n_{d_1}} = \frac{(2.14)(4.69ksi)}{3} = 10.03\ ksi$

$\tau_a = \frac{K_t \tau_A}{n_{d_1}} = \frac{(2.14)(18.09ksi)}{3} = 12.91\ ksi$

$\frac{d}{D} = 0.5$

$\frac{r}{d} = 0.14 \rightarrow (0.14)(0.5in) = 0.07in$

$\sigma_a = (10.03ksi)(\frac{1}{1.0in})^{1/2} = 10.03\ ksi$

$\tau_a = (12.91ksi)(\frac{1}{1.0in})^{1/2} = 12.91\ ksi$

$\sigma_m = (4.69ksi)(\frac{1}{1.0in})^{1/2} = 4.69\ ksi$

$\tau_m = (18.09ksi)(\frac{1}{1.0in})^{1/2} = 18.09\ ksi$

$\frac{1}{S_e} = \frac{\sigma_a}{S_{ef}} + \frac{\sigma_m}{S_y} \Rightarrow \frac{1}{S_e} = \frac{10.03ksi}{16.49ksi} + \frac{4.69ksi}{55.0ksi} \Rightarrow S_e = 0.609\ in$

$\frac{1}{S_s} = \frac{\tau_a}{S_{sf}} + \frac{\tau_m}{S_{sy}} \Rightarrow \frac{1}{S_s} = \frac{12.91ksi}{16.49ksi} + \frac{18.09ksi}{27.5ksi} \Rightarrow S_s = 0.609\ in$

$\frac{1}{S_s} = 0.609in$

Shaft Design Table #1											
Revision	Date Rev	Sheet Rev	Sheet #	σ_a	τ_a	σ_m	τ_m	S_e	S_s	S_{ef}	S_{sf}
1	1/24/2012	1	1	10.03	12.91	4.69	18.09	0.61	0.61	16.49	16.49
2	1/24/2012	1	2	10.03	12.91	4.69	18.09	0.61	0.61	16.49	16.49
3	1/24/2012	1	3	10.03	12.91	4.69	18.09	0.61	0.61	16.49	16.49
4	1/24/2012	1	4	10.03	12.91	4.69	18.09	0.61	0.61	16.49	16.49

Sheet 1

$\Sigma M_z = (0.245)(\frac{N}{kg})(1.5kg - 0.6kg)(6m) + F_{y_1} = 0.662\ kN$

$\Sigma M_z = (0.245)(\frac{N}{kg})(1.5kg - 1.5kg)(3m) + F_{y_2} = 0.245\ kN$

$\Sigma M_z = (0.245)(\frac{N}{kg})(1.5kg - 1.5kg)(0m) + F_{y_3} = 0.15\ kN$

Sheet 2

$\sigma_A = \frac{(-3.5N)(1.5m)}{\frac{\pi}{64}(1.5^4)} \Rightarrow \sigma_A = \frac{-7.55}{0.5\pi m^3} \quad \sigma_A = 1.54\ MPa$

$\tau_{SE} = \frac{(2.5)(4.5)}{\frac{\pi}{64}(1.5^4)} \Rightarrow \tau_{SE} = \frac{6.0kN}{\frac{\pi}{8}L} \Rightarrow \tau_{SE} = 4.5kN\pi^{-1}$

$\omega_1 = \sqrt{\frac{32.4}{(0.05)(1.15\times10^{-3})}} \Rightarrow \omega_1 = 837.2\ rad/s$

$\omega_2 = \sqrt{\frac{32.4}{(0.05)(8.51\times10^{-3})}} \Rightarrow \omega_2 = 325.3\ rad/s$

$\omega_1 = \left(\frac{\pi}{\sqrt{2}}\right)^2 \frac{\sqrt{EI}}{L^2} \Rightarrow m = \frac{(2.82)(\frac{\pi}{\sqrt{2}})^4(EI)^2}{32.4}$

$m = 3.76\times10^{-3}$

$\omega_1 = 837.2\ rad/s$

$\omega_2 = 325.3\ rad/s$

$\frac{1}{\omega_{res}} = \frac{1}{837.2} + \frac{1}{325.3} + \frac{1}{1.2E3}$

$\omega_{res} = 324.3\ rad/s$

$\omega_{res} = 3102.85\ rpm$

Sheet 3

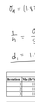

$\Sigma M_z = (0.245)(\frac{N}{kg})(1.5kg - 0.6kg)(6m)$

$\Sigma M_z = (0.245)(\frac{N}{kg})(1.5kg - 1.5kg)(3m)$

$\Sigma M_z = (0.245)(\frac{N}{kg})(1.5kg - 1.5kg)(0m)$

$\Sigma M_z = 0.15\ kN$

Sheet 4

$\sigma_A = \frac{(-3.5N)(1.5m)}{\frac{\pi}{64}(1.5^4)} \Rightarrow \sigma_A = \frac{-7.55}{0.5\pi m^3} \quad \sigma_A = 1.54\times10^{-3}$

$\tau_{SE} = \frac{(2.5)(4.5)}{\frac{\pi}{64}(1.5^4)} \Rightarrow \tau_{SE} = \frac{6.0kN}{EI} \Rightarrow \tau_{SE} = 4.5kN\pi^{-1}$

$\omega_1 = \sqrt{\frac{32.4}{(0.05)(1.15\times10^{-3})}} \Rightarrow \omega_1 = 837.2\ rad/s$

$\omega_2 = \sqrt{\frac{32.4}{(0.05)(8.51\times10^{-3})}} \Rightarrow \omega_2 = 325.3\ rad/s$

$\omega_1 = \left(\frac{\pi}{\sqrt{2}}\right)^2 \frac{\sqrt{EI}}{L^2} \Rightarrow m = \frac{(2.82)(\frac{\pi}{\sqrt{2}})^4(EI)^2}{32.4}$

$m = 3.76\times10^{-3}$

$\frac{1}{\omega_{res}} = \frac{1}{837.2} + \frac{1}{325.3} + \frac{1}{1.2E3}$

$\omega_{res} = 324.3\ rad/s$

$\omega_{res} = 3102.85\ rpm$

Sheet 5

$\sigma_A = \frac{(-3.5N)(1.5m)}{\frac{\pi}{64}(1.5^4)} \Rightarrow \sigma_A = \frac{-7.55}{0.5\pi m^3} \quad \sigma_A = 1.54\times10^{-3}$

$\tau_{SE} = \frac{(2.5)(4.5)}{\frac{\pi}{64}(1.5^4)} \Rightarrow \tau_{SE} = \frac{6.0kN}{EI} \Rightarrow \tau_{SE} = 4.5kN\pi^{-1}$

$\omega_1 = \sqrt{\frac{32.4}{(0.05)(1.15\times10^{-3})}} \Rightarrow \omega_1 = 837.2\ rad/s$

$\omega_2 = \sqrt{\frac{32.4}{(0.05)(8.51\times10^{-3})}} \Rightarrow \omega_2 = 325.3\ rad/s$

$\omega_1 = \left(\frac{\pi}{\sqrt{2}}\right)^2 \frac{\sqrt{EI}}{L^2} \Rightarrow m = \frac{(2.82)(\frac{\pi}{\sqrt{2}})^4(EI)^2}{32.4}$

$m = 3.76\times10^{-3}$

$\frac{1}{\omega_{res}} = \frac{1}{837.2} + \frac{1}{325.3} + \frac{1}{1.2E3}$

$\omega_{res} = 324.3\ rad/s$

$\omega_{res} = 3102.85\ rpm$

Sheet 6

$\sigma_A = \frac{(-3.5N)(1.5m)}{\frac{\pi}{64}(1.5^4)} \Rightarrow \sigma_A = \frac{-7.55}{0.5\pi m^3} \quad \sigma_A = 1.54\times10^{-3}$

$\tau_{SE} = \frac{(2.5)(4.5)}{\frac{\pi}{64}(1.5^4)} \Rightarrow \tau_{SE} = \frac{6.0kN}{EI} \Rightarrow \tau_{SE} = 4.5kN\pi^{-1}$

$\omega_1 = \sqrt{\frac{32.4}{(0.05)(1.15\times10^{-3})}} \Rightarrow \omega_1 = 837.2\ rad/s$

$\omega_2 = \sqrt{\frac{32.4}{(0.05)(8.51\times10^{-3})}} \Rightarrow \omega_2 = 325.3\ rad/s$

$\omega_1 = \left(\frac{\pi}{\sqrt{2}}\right)^2 \frac{\sqrt{EI}}{L^2} \Rightarrow m = \frac{(2.82)(\frac{\pi}{\sqrt{2}})^4(EI)^2}{32.4}$

$m = 3.76\times10^{-3}$

$\frac{1}{\omega_{res}} = \frac{1}{837.2} + \frac{1}{325.3} + \frac{1}{1.2E3}$

$\omega_{res} = 324.3\ rad/s$

$\omega_{res} = 3102.85\ rpm$

Sheet 7

$\sigma_A = \frac{(-3.5N)(1.5m)}{\frac{\pi}{64}(1.5^4)} \Rightarrow \sigma_A = \frac{-7.55}{0.5\pi m^3} \quad \sigma_A = 1.54\times10^{-3}$

$\tau_{SE} = \frac{(2.5)(4.5)}{\frac{\pi}{64}(1.5^4)} \Rightarrow \tau_{SE} = \frac{6.0kN}{EI} \Rightarrow \tau_{SE} = 4.5kN\pi^{-1}$

$\omega_1 = \sqrt{\frac{32.4}{(0.05)(1.15\times10^{-3})}} \Rightarrow \omega_1 = 837.2\ rad/s$

$\omega_2 = \sqrt{\frac{32.4}{(0.05)(8.51\times10^{-3})}} \Rightarrow \omega_2 = 325.3\ rad/s$

$\omega_1 = \left(\frac{\pi}{\sqrt{2}}\right)^2 \frac{\sqrt{EI}}{L^2} \Rightarrow m = \frac{(2.82)(\frac{\pi}{\sqrt{2}})^4(EI)^2}{32.4}$

$m = 3.76\times10^{-3}$

$\frac{1}{\omega_{res}} = \frac{1}{837.2} + \frac{1}{325.3} + \frac{1}{1.2E3}$

$\omega_{res} = 324.3\ rad/s$

$\omega_{res} = 3102.85\ rpm$

Sheet 8

$\sigma_A = \frac{(-3.5N)(1.5m)}{\frac{\pi}{64}(1.5^4)} \Rightarrow \sigma_A = \frac{-7.55}{0.5\pi m^3} \quad \sigma_A = 1.54\times10^{-3}$

$\tau_{SE} = \frac{(2.5)(4.5)}{\frac{\pi}{64}(1.5^4)} \Rightarrow \tau_{SE} = \frac{6.0kN}{EI} \Rightarrow \tau_{SE} = 4.5kN\pi^{-1}$

$\omega_1 = \sqrt{\frac{32.4}{(0.05)(1.15\times10^{-3})}} \Rightarrow \omega_1 = 837.2\ rad/s$

$\omega_2 = \sqrt{\frac{32.4}{(0.05)(8.51\times10^{-3})}} \Rightarrow \omega_2 = 325.3\ rad/s$

$\omega_1 = \left(\frac{\pi}{\sqrt{2}}\right)^2 \frac{\sqrt{EI}}{L^2} \Rightarrow m = \frac{(2.82)(\frac{\pi}{\sqrt{2}})^4(EI)^2}{32.4}$

$m = 3.76\times10^{-3}$

$\frac{1}{\omega_{res}} = \frac{1}{837.2} + \frac{1}{325.3} + \frac{1}{1.2E3}$

$\omega_{res} = 324.3\ rad/s$

$\omega_{res} = 3102.85\ rpm$

Sheet 9

$\sigma_A = \frac{(-3.5N)(1.5m)}{\frac{\pi}{64}(1.5^4)} \Rightarrow \sigma_A = \frac{-7.55}{0.5\pi m^3} \quad \sigma_A = 1.54\times10^{-3}$

$\tau_{SE} = \frac{(2.5)(4.5)}{\frac{\pi}{64}(1.5^4)} \Rightarrow \tau_{SE} = \frac{6.0kN}{EI} \Rightarrow \tau_{SE} = 4.5kN\pi^{-1}$

$\omega_1 = \sqrt{\frac{32.4}{(0.05)(1.15\times10^{-3})}} \Rightarrow \omega_1 = 837.2\ rad/s$

$\omega_2 = \sqrt{\frac{32.4}{(0.05)(8.51\times10^{-3})}} \Rightarrow \omega_2 = 325.3\ rad/s$

$\omega_1 = \left(\frac{\pi}{\sqrt{2}}\right)^2 \frac{\sqrt{EI}}{L^2} \Rightarrow m = \frac{(2.82)(\frac{\pi}{\sqrt{2}})^4(EI)^2}{32.4}$

$m = 3.76\times10^{-3}$

$\frac{1}{\omega_{res}} = \frac{1}{837.2} + \frac{1}{325.3} + \frac{1}{1.2E3}$

$\omega_{res} = 324.3\ rad/s$

$\omega_{res} = 3102.85\ rpm$

Sheet 10

$\sigma_A = \frac{(-3.5N)(1.5m)}{\frac{\pi}{64}(1.5^4)} \Rightarrow \sigma_A = \frac{-7.55}{0.5\pi m^3} \quad \sigma_A = 1.54\times10^{-3}$

$\tau_{SE} = \frac{(2.5)(4.5)}{\frac{\pi}{64}(1.5^4)} \Rightarrow \tau_{SE} = \frac{6.0kN}{EI} \Rightarrow \tau_{SE} = 4.5kN\pi^{-1}$

$\omega_1 = \sqrt{\frac{32.4}{(0.05)(1.15\times10^{-3})}} \Rightarrow \omega_1 = 837.2\ rad/s$

$\omega_2 = \sqrt{\frac{32.4}{(0.05)(8.51\times10^{-3})}} \Rightarrow \omega_2 = 325.3\ rad/s$

$\omega_1 = \left(\frac{\pi}{\sqrt{2}}\right)^2 \frac{\sqrt{EI}}{L^2} \Rightarrow m = \frac{(2.82)(\frac{\pi}{\sqrt{2}})^4(EI)^2}{32.4}$

$m = 3.76\times10^{-3}$

$\frac{1}{\omega_{res}} = \frac{1}{837.2} + \frac{1}{325.3} + \frac{1}{1.2E3}$

$\omega_{res} = 324.3\ rad/s$

$\omega_{res} = 3102.85\ rpm$

Problem 2

1. Design from 1018 square bars required between the gears and shafts. Make sure to fully define the shaft sizes.

Key 1

$T_2 = \frac{(4492.2)}{(16in/2)} \Rightarrow F_{t_2} = 560.2\ lbs$

$d = 1.0in \Rightarrow w = \frac{1}{4}in \quad h = \frac{1}{4}in$

$\text{Keys} = 2$

$L = \frac{(2)(1.1)(560.2)}{(4)(12ksi)} \quad \boxed{L = 4.32\ in}$

Key 2

$F_t = \frac{(1313.3)}{(1.5/2)} \quad F_t = 2401.5\ lbs$

$d = 1.5in \Rightarrow w = h = 3/8\ in$

$L = \frac{(3)(1)(2401.5)}{(4)(12ksi)} \quad \boxed{L = 0.751in}$

Key 3

$F_t = \frac{(1313.3)}{(1.5/2)} \quad F_t = 2666.2\ lbs \quad w = h = \frac{5}{8}in$

$\boxed{L = 0.96in}$

Key 4

$F_t = \frac{(4519.9)}{(1.5/2)} \quad F_t = 12275.9$

$d = 1.5in \quad w = h = \frac{5}{8}in$

$\boxed{L = 0.535in}$

Project HW 4

Wednesday, April 12, 2023 11:48 PM

Design bearings for the three shafts (2 on input, 2 on intermediate, and 2 on output) needed for your gear box.

- Use deep-groove ball bearings or cylindrical roller bearings.
- Bearings should last 5kh at 99% reliability.
- Use an application factor of 1.1.
- Show example calculation for one bearing from EACH shaft
- Check if the shope from shafts is within acceptable values for ball (or roller) bearings.
- If the intermediate shaft has too much deflection and/or slope, consider adding additional bearing support in between two gears. You do NOT have to design bearing here (typically would be a journal bearing).

Shaft 1

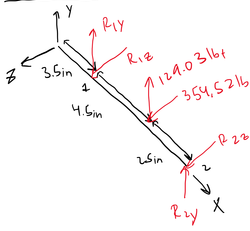

$\Sigma M_1^{z-z} = (129.03)(4.5) + R_{2y}(7) = 0$

$R_{2y} = -82.9 \text{ lbf}$

$\Sigma M_1^{y-y} = (354.52)(4.5) + R_{2z}(7) = 0$

$R_{2z} = -227.9 \text{ lbf}$

$\Sigma F_y = R_{1y} + 129.03 - 82.9 = 0$

$R_{1y} = -46.12 \text{ lbf}$

$\Sigma F_z = R_{1z} + 354.52 - 227.9 = 0$

$R_{1z} = -126.62 \text{ lbf}$

$R_1 = F_{D,1} = \sqrt{(46.12)^2 + (126.62)^2}$

$F_{D,1} = 134.75 \text{ lbf}$

$R_2 = F_{D,2} = \sqrt{82.9^2 + 227.9^2}$

$F_{D,2} = 242.5 \text{ lbf}$

$a_f = 1.1 \quad a = 3$ (ball Bearing)

$L_D = (5 \times 10^3)(500)(60) \rightarrow L_D = 150 \times 10^6$

$X_D = \frac{L_D}{L_{10}} = \frac{150 \times 10^6}{10^6} \rightarrow X_D = 9.0$

For $L_{10} = 10^6$ $\begin{cases} X_0 = 0.02 \\ \theta = 4.459 \\ b = 1.483 \end{cases}$

$$C_{10} = (1.1)(134.75 \text{lbf}) \left[\frac{150}{0.02 + (4.459 - 0.02)\left[\ln\left(\frac{1}{0.9}\right)\right]^{1/1.483}} \right]^{\frac{1}{3}}$$

$C_{10} = 9.69 F_D$

$C_{10,1} = 9.69(134.75 \text{lbf})$

$C_{10,2} = 9.69(242.5 \text{lbf})$

$C_{10,1} = 1305.7 \text{ lbf}$

$C_{10,2} = 2349.8 \text{ lbf}$

Bearing	C10 (KN)	Bore Diamter (mm)	Outer Diamter (mm)	Width (mm)
1	5.807876	12	32	10
2	10.45202	20	47	14

Bearing	C10 (lbf)	Bore Diamter (in)	Outer Diamter (in)	Width (in)
1	1305.728	0.472440945	1.25984252	0.393700787
2	2349.825	0.787401575	1.850393701	0.551181102

Shaft 2

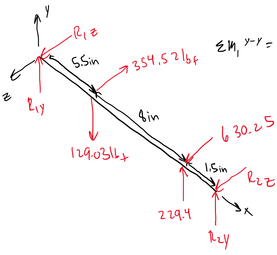

$\Sigma M_1^{z-z} = (-129.03)(5.5) + (229.4)(13.5) + R_{2y}(15) = 0$

$R_{2y} = -159.15 \text{ lbf}$

$\Sigma M_1^{y-y} = (335.52)(5.5) - (630.25)(13.5) - R_{2z}(15) = 0$

$R_{2z} = -444.20 \text{ lbf}$

$\Sigma F_y = R_{1y} - 129.03 + 229.4 - 159.15 = 0$

$R_{1y} = 58.78 \text{ lbf}$

$\Sigma F_z = R_{1z} - 354.52 + 630.25 - 444.2 = 0$

$R_{1z} = 168.47 \text{ lbf}$

$R_1 = F_{D,1} = \sqrt{(58.7)^2 + (168.5)^2}$

$F_{D,1} = 178.2 \text{ lbf}$

$R_2 = F_{D,2} = \sqrt{159.15^2 + 444.2^2}$

$F_{D,2} = 471.8 \text{ lbf}$

$a_f = 1.1 \quad a = 3$ (Ball Bearing)

$L_D = (5 \times 10^3)(625)(60) \rightarrow L_D = 187.5 \times 10^6$

$X_D = \frac{L_D}{L_{10}} = \frac{187.5 \times 10^6}{10^6} \rightarrow X_D = 9.0$

For $L_{10} = 10^6$ $\begin{cases} X_0 = 0.02 \\ \theta = 4.459 \\ b = 1.483 \end{cases}$

$$C_{10} = (1.1)(F_D) \left[\frac{187.5}{0.02 + (4.459 - 0.02)\left[\ln\left(\frac{1}{0.9}\right)\right]^{1/1.483}} \right]^{\frac{1}{3}}$$

$C_{10} = 10.44 F_D$

$C_{10,1} = 10.44(178.2)$

$C_{10,2} = 10.44(471.8)$

$C_{10,1} = 1860 \text{ lbf}$

$C_{10,2} = 4925.6 \text{ lbf}$

Bearing	C10 (KN)	Bore Diamter (mm)	Outer Diamter (mm)	Width (mm)
1	8.27509478	17	40	12
2	21.9090332	35	72	17

Bearing	C10 (lbf)	Bore Diamter (in)	Outer Diamter (in)	Width (in)
1	1860.408	0.669291339	1.57480315	0.472440945
2	4925.592	1.377952756	2.834645669	0.669291339

Shaft 3

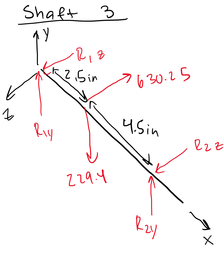

$\Sigma M_1^{z-z} = -(229.4)(2.5) + R_{2y}(7) = 0$

$R_{2y} = 81.9 \text{ lbf}$

$\Sigma M_1^{y-y} = (630.25)(2.5) - R_{2z}(7) = 0$

$R_{2z} = 225.09 \text{ lbf}$

$\Sigma F_y = R_{1y} - 229.4 + 81.9 = 0$

$R_{1y} = 147.5 \text{ lbf}$

$\Sigma F_z = R_{1z} - 630.25 + 225.09 = 0$

$R_{1z} = 405.16 \text{ lbf}$

$R_1 = F_{D,1} = \sqrt{(81.9)^2 + (225.09)^2}$

$F_{D,1} = 239.5 \text{ lbf}$

$R_2 = F_{D,2} = \sqrt{147.5^2 + 405.16^2}$

$F_{D,2} = 431.17 \text{ lbf}$

$a_f = 1.1 \quad a = 3.33$ (Roller Bearing)

$L_D = (5 \times 10^3)(2500)(60) \rightarrow L_D = 750 \times 10^6$

$X_D = \frac{L_D}{L_{10}} = \frac{750 \times 10^6}{10^6} \rightarrow X_D = 9.0$

For $L_{10} = 10^6$ $\begin{cases} X_0 = 0.02 \\ \theta = 4.459 \\ b = 1.483 \end{cases}$

$$C_{10} = (1.1)(F_D) \left[\frac{750}{0.02 + (4.459 - 0.02)\left[\ln\left(\frac{1}{0.9}\right)\right]^{1/1.483}} \right]^{\frac{1}{3.33}}$$

$C_{10} = 12.66 F_D$

$C_{10,1} = 12.66(239.5 \text{lbf})$

$C_{10,1} = 3032.07 \text{lbf}$

Bearing	C10 (KN)	Bore Diamter (mm)	Outer Diamter (mm)	Width (mm)
1	13.4866474	25	52	15
2	24.2799071	35	72	17

Bearing	C10 (lbf)	Bore Diamter (in)	Outer Diamter (in)	Width (in)
1	3032.07	0.984251969	2.047244094	0.590551181
2	5458.6122	1.377952756	2.834645669	0.669291339

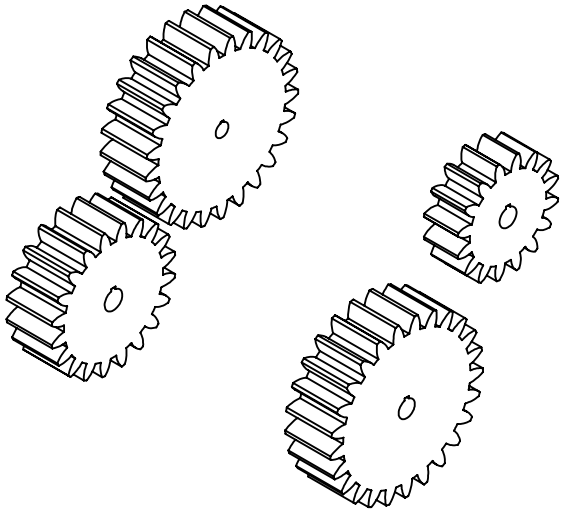

		UNLESS OTHERWISE SPECIFIED:		NAME	DATE
		DIMENSIONS ARE IN INCHES TOLERANCES: FRACTIONAL ± ANGULAR: MACH ± BEND ± TWO PLACE DECIMAL ± THREE PLACE DECIMAL ±	DRAWN		
			CHECKED		
			ENG APPR.		
			MFG APPR.		
		INTERPRET GEOMETRIC TOLERANCING PER:	Q.A.		
		MATERIAL	COMMENTS:		
NEXT ASSY	USED ON	FINISH			
APPLICATION		DO NOT SCALE DRAWING			

TITLE:

SIZE	DWG. NO.	REV
A	MAE342_Project	
SCALE: 1:16	WEIGHT:	SHEET 1 OF 1

PROPRIETARY AND CONFIDENTIAL

THE INFORMATION CONTAINED IN THIS DRAWING IS THE SOLE PROPERTY OF <INSERT COMPANY NAME HERE>. ANY REPRODUCTION IN PART OR AS A WHOLE WITHOUT THE WRITTEN PERMISSION OF <INSERT COMPANY NAME HERE> IS PROHIBITED.

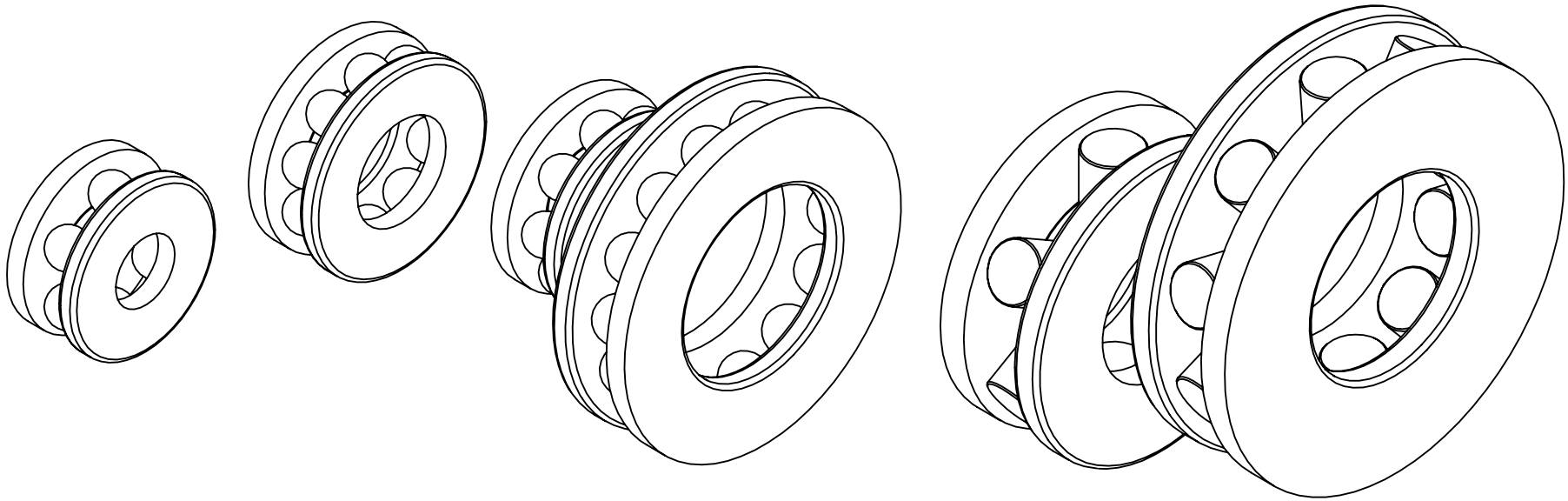

		UNLESS OTHERWISE SPECIFIED:		NAME	DATE
		DIMENSIONS ARE IN INCHES TOLERANCES: FRACTIONAL ± ANGULAR: MACH ± BEND ± TWO PLACE DECIMAL ± THREE PLACE DECIMAL ±	DRAWN		
			CHECKED		
			ENG APPR.		
			MFG APPR.		
		INTERPRET GEOMETRIC TOLERANCING PER:	Q.A.		
		MATERIAL	COMMENTS:		
NEXT ASSY	USED ON	FINISH			
APPLICATION		DO NOT SCALE DRAWING			

TITLE:

SIZE	DWG. NO.	REV
A	MAE342_Project	
SCALE: 1:4	WEIGHT:	SHEET 1 OF 1

PROPRIETARY AND CONFIDENTIAL

THE INFORMATION CONTAINED IN THIS DRAWING IS THE SOLE PROPERTY OF <INSERT COMPANY NAME HERE>. ANY REPRODUCTION IN PART OR AS A WHOLE WITHOUT THE WRITTEN PERMISSION OF <INSERT COMPANY NAME HERE> IS PROHIBITED.

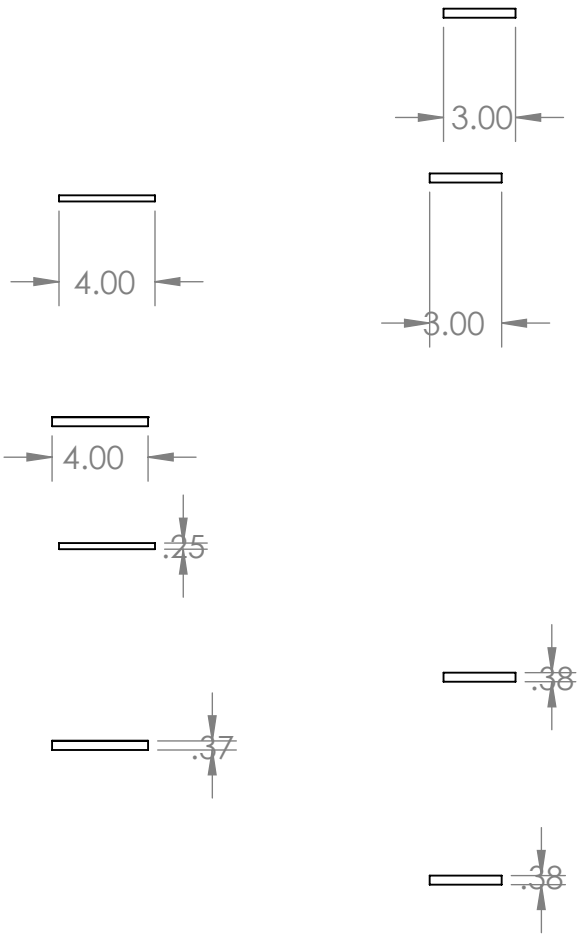

		UNLESS OTHERWISE SPECIFIED:		NAME	DATE
		DIMENSIONS ARE IN INCHES TOLERANCES: FRACTIONAL ± ANGULAR: MACH ± BEND ± TWO PLACE DECIMAL ± THREE PLACE DECIMAL ±	DRAWN		
			CHECKED		
			ENG APPR.		
			MFG APPR.		
		INTERPRET GEOMETRIC TOLERANCING PER:	Q.A.		
		MATERIAL	COMMENTS:		
NEXT ASSY	USED ON	FINISH			
APPLICATION		DO NOT SCALE DRAWING			

TITLE:

SIZE	DWG. NO.	REV
A	MAE342_Project	
SCALE: 1:8	WEIGHT:	SHEET 1 OF 1

PROPRIETARY AND CONFIDENTIAL

THE INFORMATION CONTAINED IN THIS DRAWING IS THE SOLE PROPERTY OF <INSERT COMPANY NAME HERE>. ANY REPRODUCTION IN PART OR AS A WHOLE WITHOUT THE WRITTEN PERMISSION OF <INSERT COMPANY NAME HERE> IS PROHIBITED.

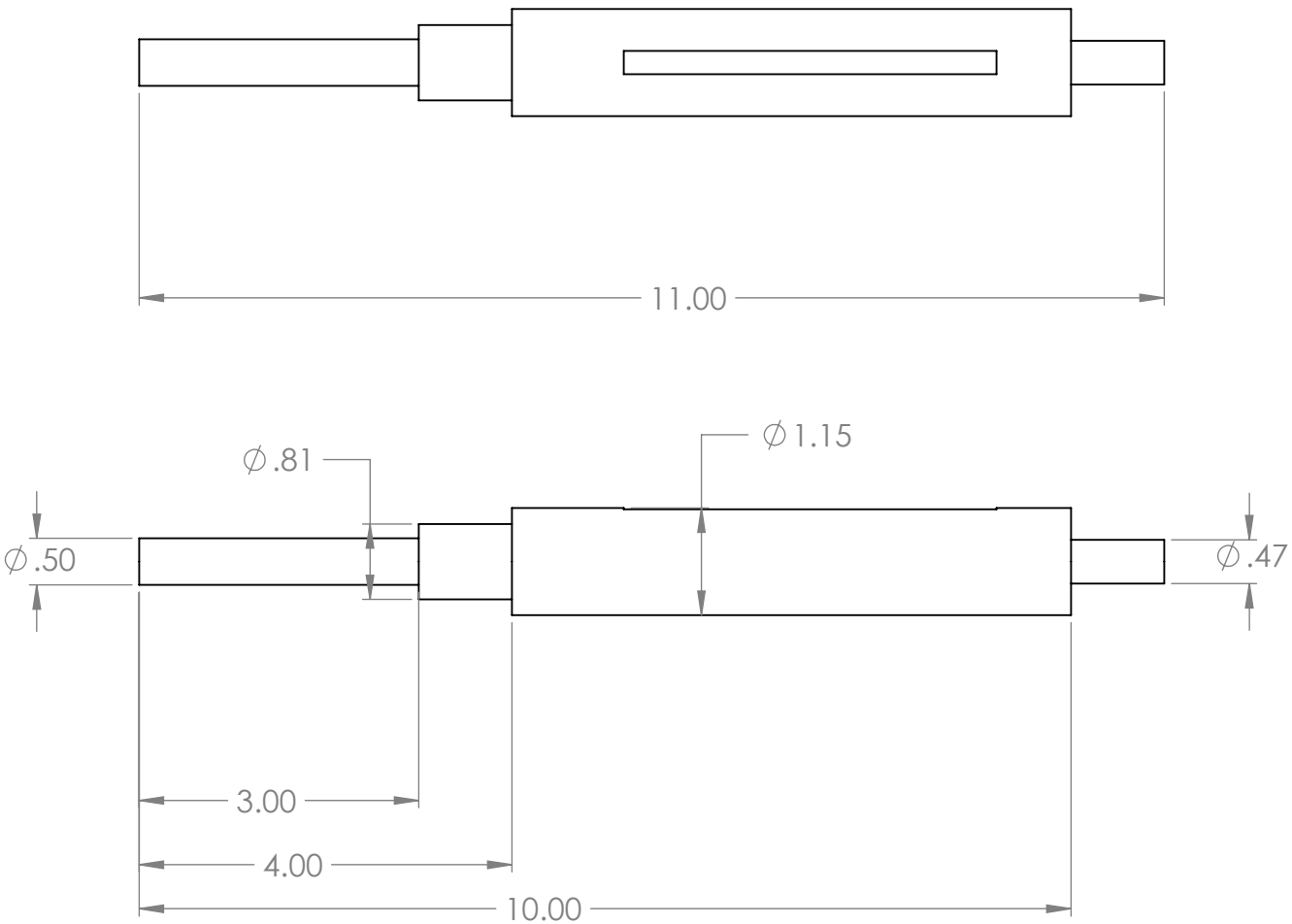

		UNLESS OTHERWISE SPECIFIED:		NAME	DATE
		DIMENSIONS ARE IN INCHES TOLERANCES: FRACTIONAL ± ANGULAR: MACH ± BEND ± TWO PLACE DECIMAL ± THREE PLACE DECIMAL ±	DRAWN		
			CHECKED		
			ENG APPR.		
			MFG APPR.		
		INTERPRET GEOMETRIC TOLERANCING PER:	Q.A.		
		MATERIAL	COMMENTS:		
NEXT ASSY	USED ON	FINISH			
APPLICATION		DO NOT SCALE DRAWING			

TITLE:

SIZE	DWG. NO.	REV
A	Shaft1	
SCALE: 1:5	WEIGHT:	SHEET 1 OF 1

PROPRIETARY AND CONFIDENTIAL

THE INFORMATION CONTAINED IN THIS DRAWING IS THE SOLE PROPERTY OF <INSERT COMPANY NAME HERE>. ANY REPRODUCTION IN PART OR AS A WHOLE WITHOUT THE WRITTEN PERMISSION OF <INSERT COMPANY NAME HERE> IS PROHIBITED.

SOLIDWORKS Educational Product. For Instructional Use Only.

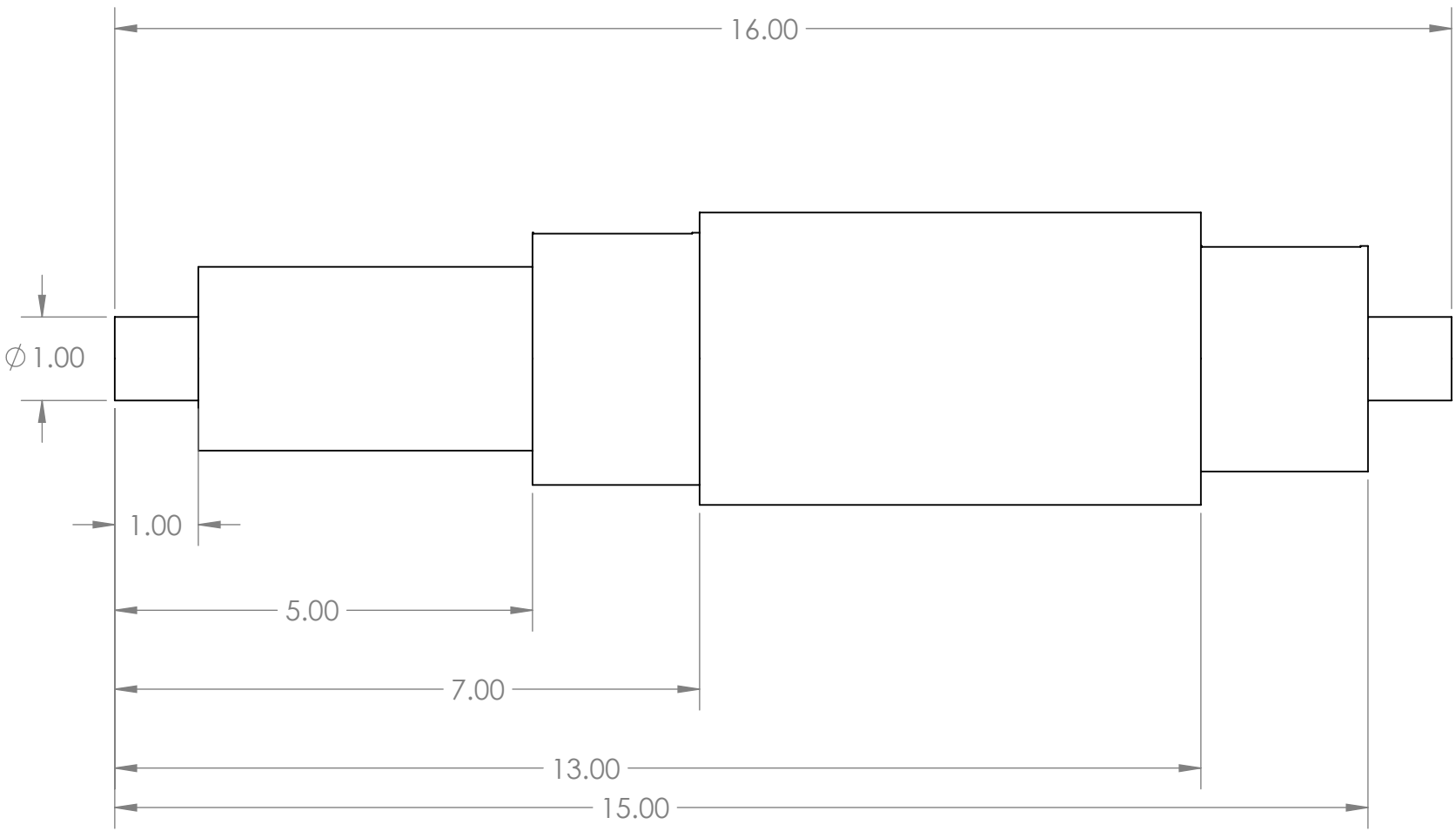

		UNLESS OTHERWISE SPECIFIED:		NAME	DATE
		DIMENSIONS ARE IN INCHES TOLERANCES: FRACTIONAL ± ANGULAR: MACH ± BEND ± TWO PLACE DECIMAL ± THREE PLACE DECIMAL ±	DRAWN		
			CHECKED		
			ENG APPR.		
			MFG APPR.		
		INTERPRET GEOMETRIC TOLERANCING PER:	Q.A.		
		MATERIAL	COMMENTS:		
NEXT ASSY	USED ON	FINISH			
APPLICATION		DO NOT SCALE DRAWING			

TITLE:

SIZE	DWG. NO.	REV
A	Shaft2	
SCALE: 1:5	WEIGHT:	SHEET 1 OF 1

PROPRIETARY AND CONFIDENTIAL

THE INFORMATION CONTAINED IN THIS DRAWING IS THE SOLE PROPERTY OF <INSERT COMPANY NAME HERE>. ANY REPRODUCTION IN PART OR AS A WHOLE WITHOUT THE WRITTEN PERMISSION OF <INSERT COMPANY NAME HERE> IS PROHIBITED.

SOLIDWORKS Educational Product. For Instructional Use Only.

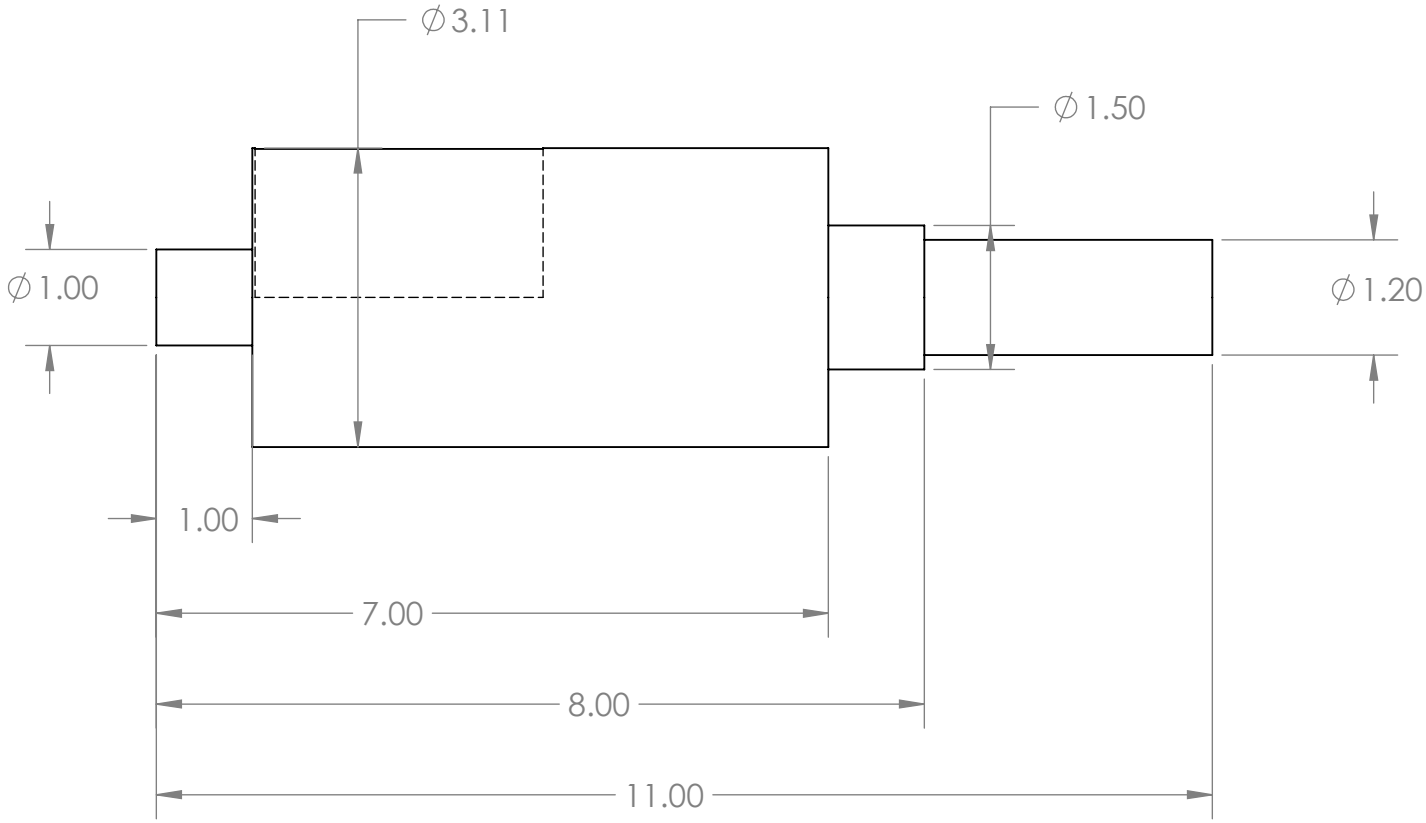

		UNLESS OTHERWISE SPECIFIED:		NAME	DATE
		DIMENSIONS ARE IN INCHES TOLERANCES: FRACTIONAL ± ANGULAR: MACH ± BEND ± TWO PLACE DECIMAL ± THREE PLACE DECIMAL ±	DRAWN		
			CHECKED		
			ENG APPR.		
			MFG APPR.		
		INTERPRET GEOMETRIC TOLERANCING PER:	Q.A.		
		MATERIAL	COMMENTS:		
NEXT ASSY	USED ON	FINISH			
APPLICATION		DO NOT SCALE DRAWING			

TITLE:

SIZE	DWG. NO.	REV
A	Shaft3	
SCALE: 1:5	WEIGHT:	SHEET 1 OF 1

PROPRIETARY AND CONFIDENTIAL

THE INFORMATION CONTAINED IN THIS DRAWING IS THE SOLE PROPERTY OF <INSERT COMPANY NAME HERE>. ANY REPRODUCTION IN PART OR AS A WHOLE WITHOUT THE WRITTEN PERMISSION OF <INSERT COMPANY NAME HERE> IS PROHIBITED.

SOLIDWORKS Educational Product. For Instructional Use Only.

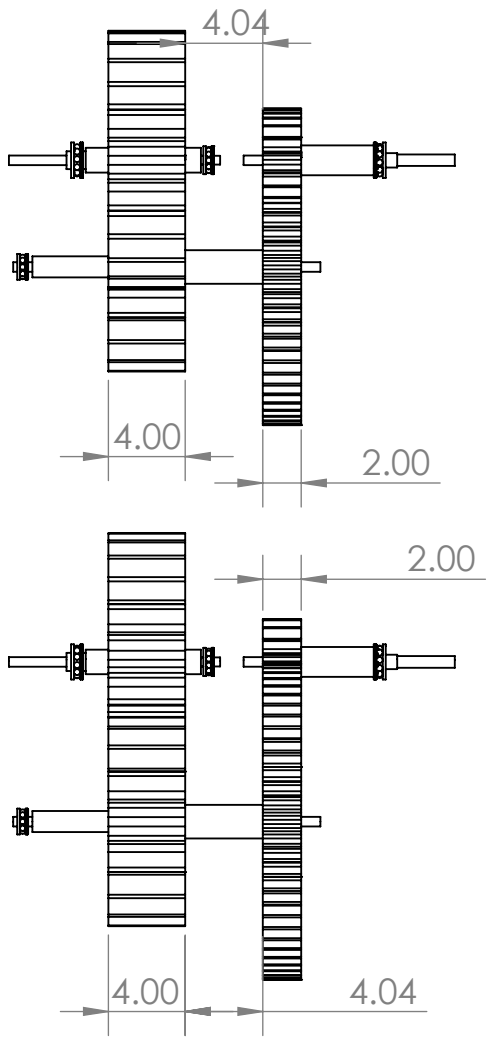

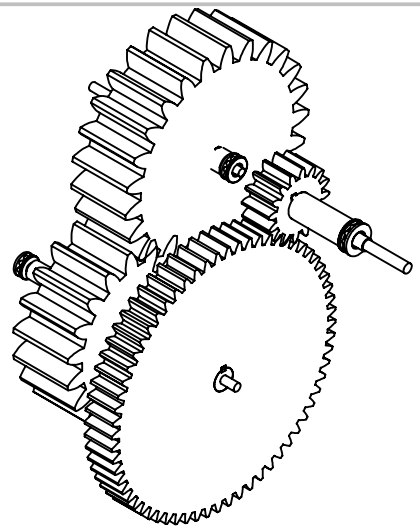

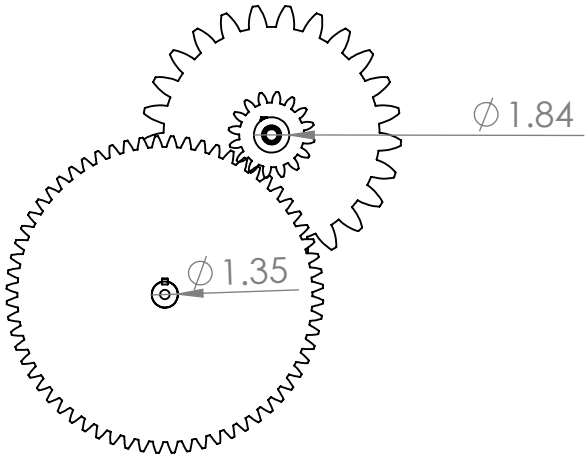

		UNLESS OTHERWISE SPECIFIED:		NAME	DATE
		DIMENSIONS ARE IN INCHES TOLERANCES: FRACTIONAL ± ANGULAR: MACH ± BEND ± TWO PLACE DECIMAL ± THREE PLACE DECIMAL ±	DRAWN		
			CHECKED		
			ENG APPR.		
			MFG APPR.		
		INTERPRET GEOMETRIC TOLERANCING PER:	Q.A.		
		MATERIAL	COMMENTS:		
NEXT ASSY	USED ON	FINISH			
APPLICATION		DO NOT SCALE DRAWING			

TITLE:

SIZE | DWG. NO. | REV

EE342_Project

SCALE: 1:10 | WEIGHT: | SHEET 1 OF 1

PROPRIETARY AND CONFIDENTIAL

THE INFORMATION CONTAINED IN THIS DRAWING IS THE SOLE PROPERTY OF <INSERT COMPANY NAME HERE>. ANY REPRODUCTION IN PART OR AS A WHOLE WITHOUT THE WRITTEN PERMISSION OF <INSERT COMPANY NAME HERE> IS PROHIBITED.

SOLIDWORKS Educational Product. For Instructional Use Only.

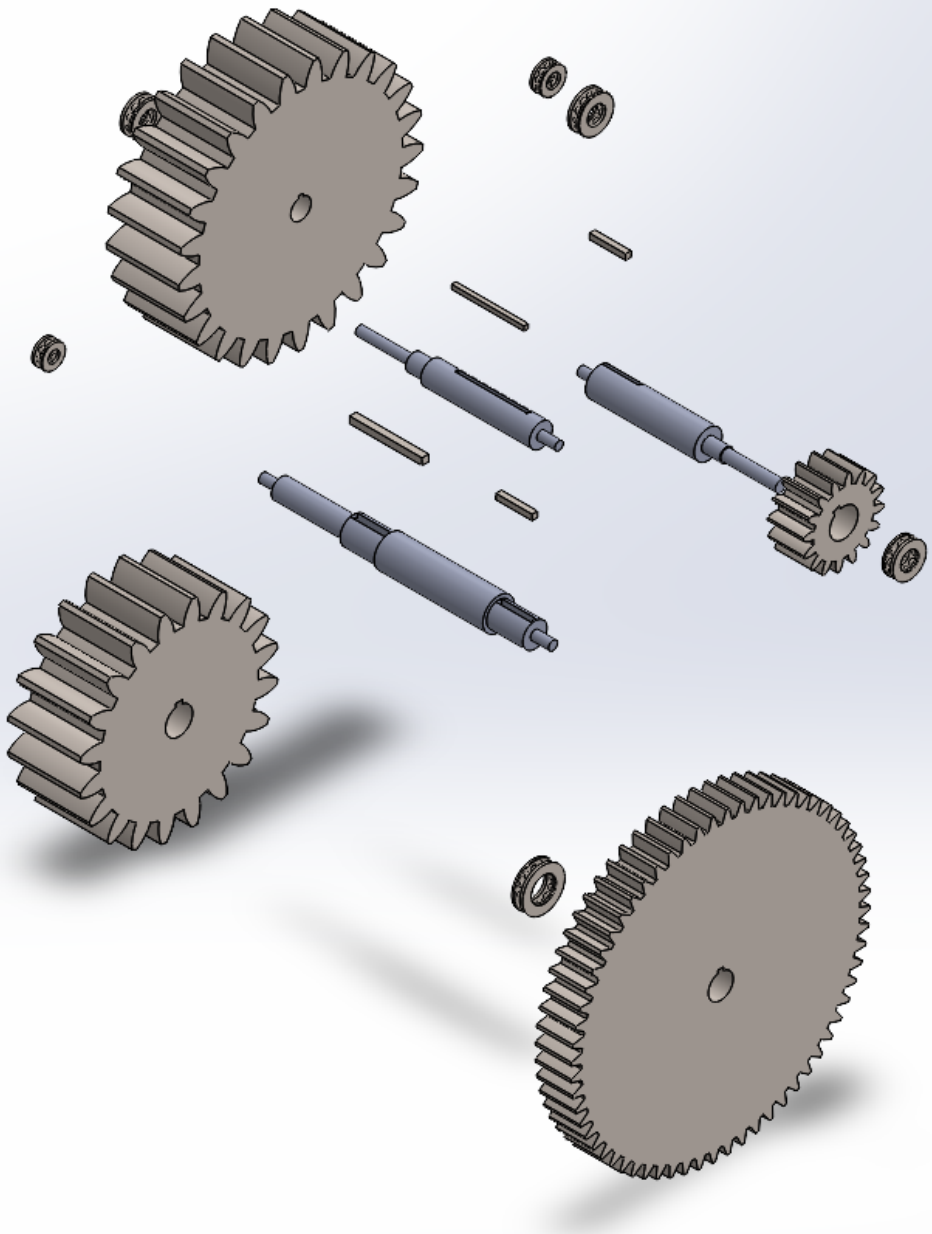

SOLIDWORKS Educational Product. For Instructional Use Only.

Conclusion:

I learned how to design gears, shafts, bearings, and keys for the shaft. In gears, I learned how to calculate the number of teeth needed for no interferences between the pinion and the gear. I also learned how to calculate the hardness of the gears and all the variables that are needed. For the shaft, I learned how to use iterations to find the diameters of the shaft. There are several options to choose from in the shaft designs because you can have different step shafts with different fillets. I also learned that there is a critical speed needed to calculate for it to operate safely. For the bearing, I learned how to design the bearings where smaller diameters are needed. Overall, I learned the process of designing a gearbox which gave me a learning experience =e to be able to design other projects with given parameters.