# Computer OpenX65 by X65.EU

## MOTHERBOARD (MO-BO) WITH THE CPU W65Cxx

### Block Diagram:

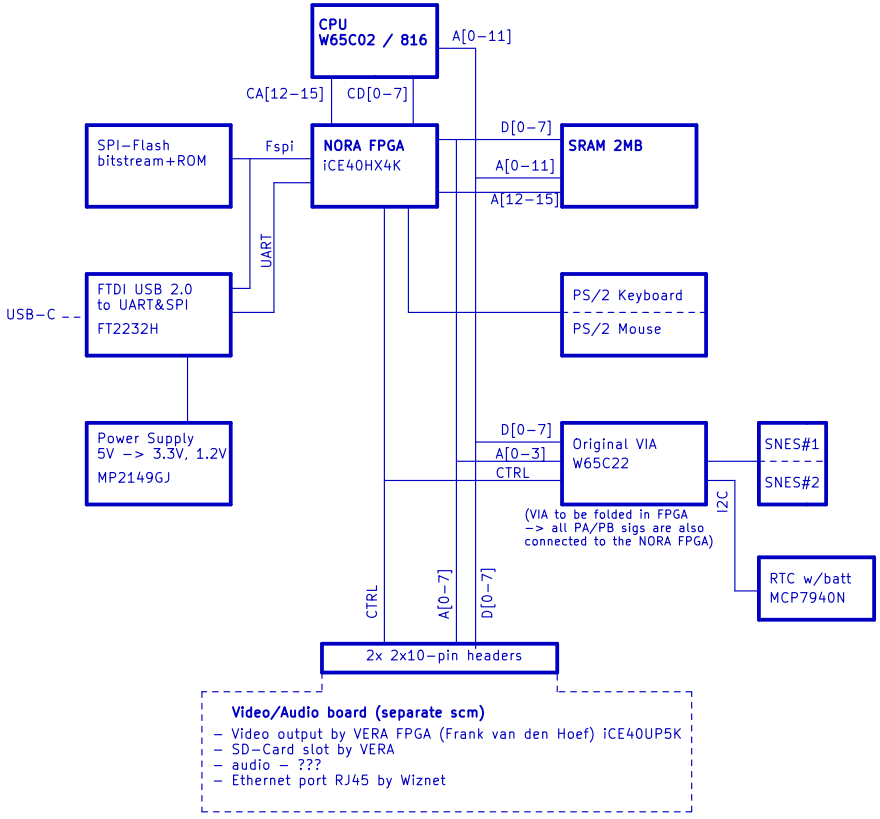


### Revision History:

| | |
|---|---|
| rev01 / 30.3.2023 | Initial design. PCB 100x100mm, 2-L.<br>First PCB production: PCBWAY on 29.3.2023<br>file: openx65-mobo-rev01b-grb.zip |

### Schematic sheets:

CPU+SRAM
2
File: cpu_sram.kicad_sch

FPGA
3
File: fpga.kicad_sch

VIA, RTC, SNES
4
File: via_rtc.kicad_sch

USB-Terminal
5
File: usbdev.kicad_sch

VA-Board, PS2
6
File: b2b-conns.kicad_sch

Power Supply
7
File: pwrsup.kicad_sch

FID101 Fiducial
FID102 Fiducial
FID103 Fiducial
FID104 Fiducial

H101 MountingHole
H102 MountingHole
H103 MountingHole
H104 MountingHole

OpenX65 MOTHERBOARD
**FOR X65.EU DESIGNED BY JSYKORA.INFO**
Sheet: /
File: open65.kicad_sch

***Title: OpenX65***

| | | |
|---|---|---|
| Size: A4 | Date: 2023-03-30 | **Rev: rev01** |
| KiCad E.D.A. kicad (6.0.7) | | Id: 1/7 |

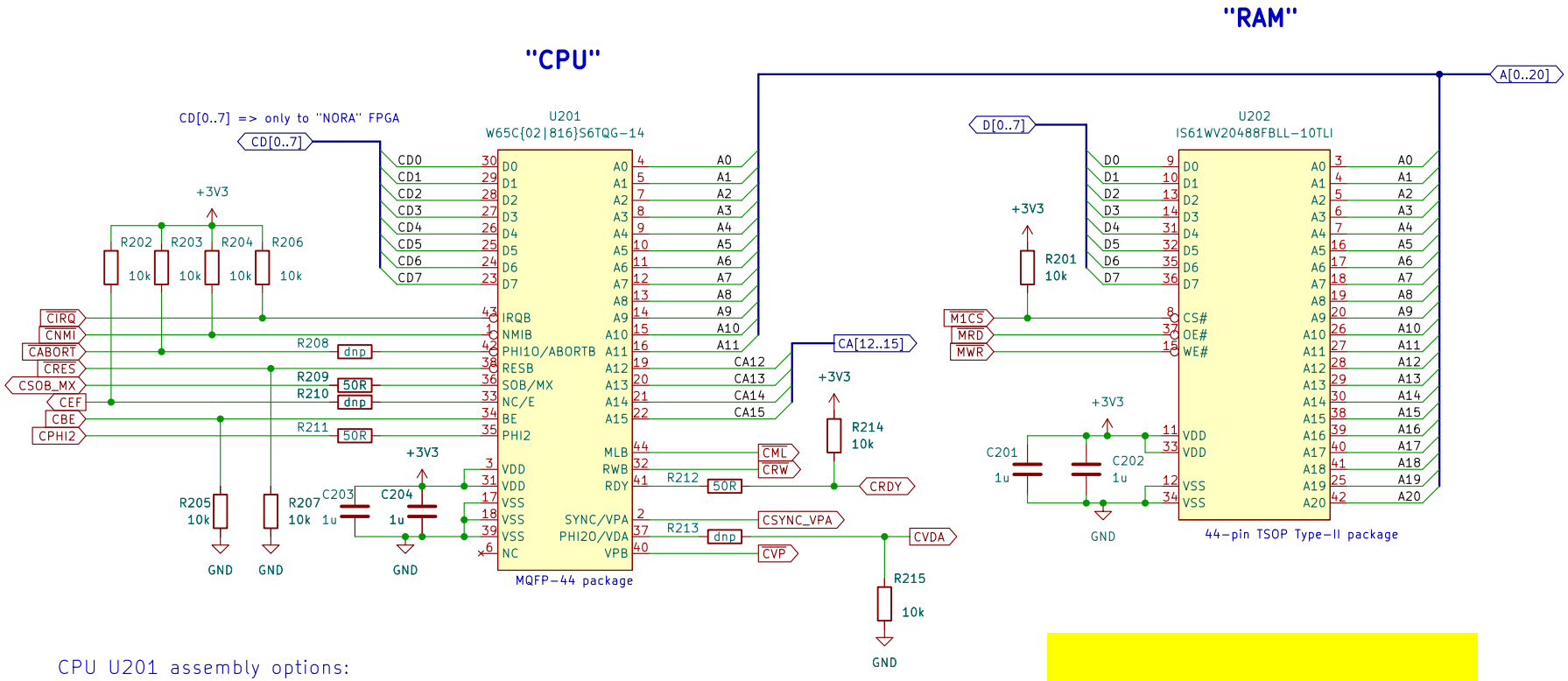


CPU U201 assembly options:

a) W65C02S6TQG-14 => 8-bit CPU
=> do not populate R208, R210, R213

b) W65C816S6TQG-14 => 16-bit CPU (not 100% compatible with the 8-bit!!)
=> R208=R210=R213=50ohm

add PU/PD to ALL control signals!

OpenX65 MOTHERBOARD
**FOR X65.EU DESIGNED BY JSYKORA.INFO**

Sheet: /CPU+SRAM/
File: cpu_sram.kicad_sch

***Title: OpenX65 – CPU and SRAM***

| Size: A4 | Date: 2023-03-30 | **Rev: rev01** |
|---|---|---|
| KiCad E.D.A. kicad (6.0.7) | | Id: 2/7 |

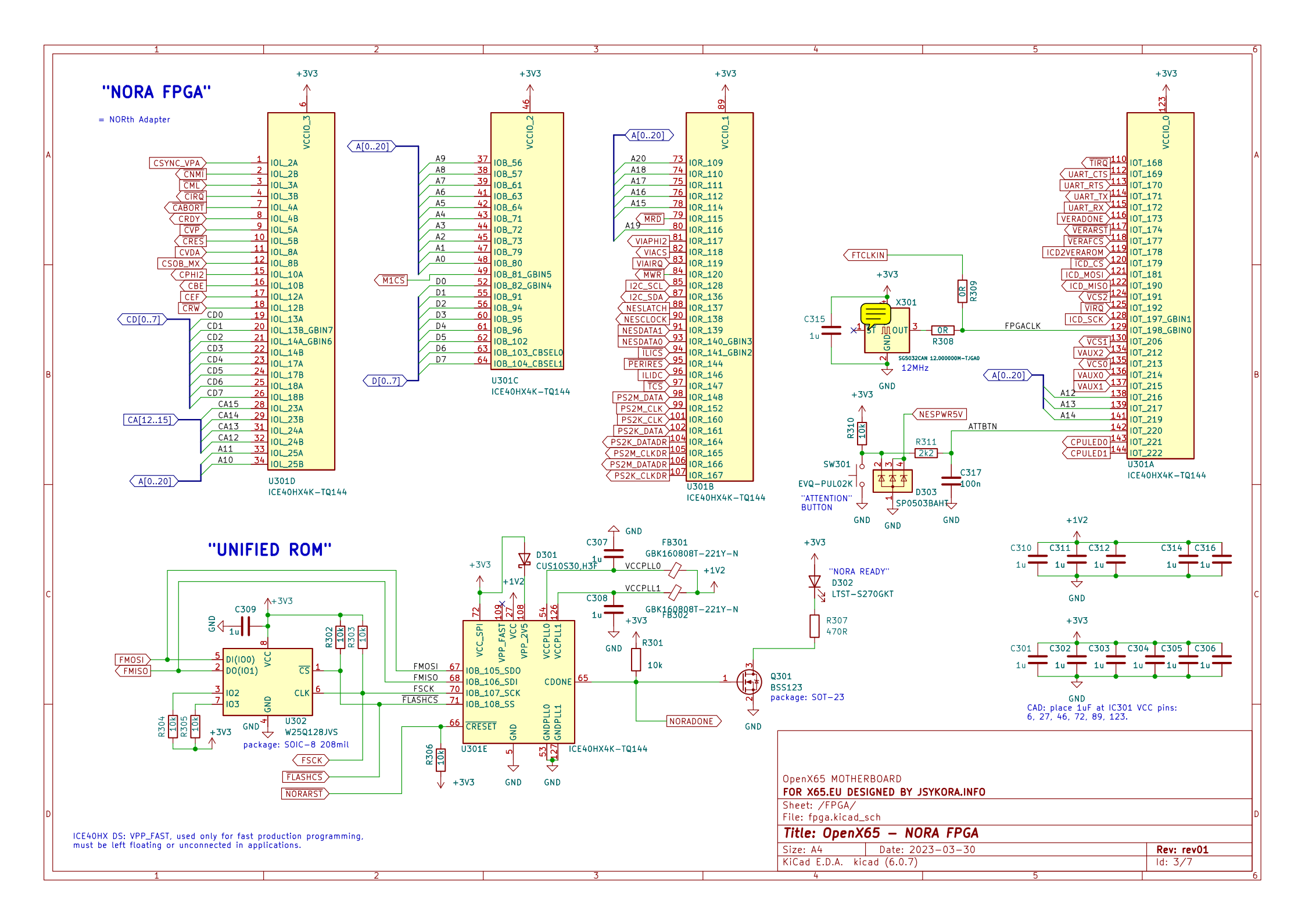
"NORA FPGA"
= NORth Adapter
U301D
ICE40HX4K-TQ144
U301C
ICE40HX4K-TQ144
U301B
ICE40HX4K-TQ144
U301A
ICE40HX4K-TQ144
"UNIFIED ROM"
U302
W25Q128JVS
package: SOIC-8 208mil
U301E
ICE40HX4K-TQ144
"NORA READY"
D302
LTST-S270GKT
Q301
BSS123
package: SOT-23
"ATTENTION"
BUTTON
SG5032CAN 12.000000M-TJGA0
12MHz
CAD: place 1uF at IC301 VCC pins:
6, 27, 46, 72, 89, 123.
ICE40HX DS: VPP_FAST, used only for fast production programming,
must be left floating or unconnected in applications.
OpenX65 MOTHERBOARD
FOR X65.EU DESIGNED BY JSYKORA.INFO
Sheet: /FPGA/
File: fpga.kicad_sch
Title: OpenX65 – NORA FPGA
Size: A4
Date: 2023-03-30
Rev: rev01
KiCad E.D.A. kicad (6.0.7)
Id: 3/7

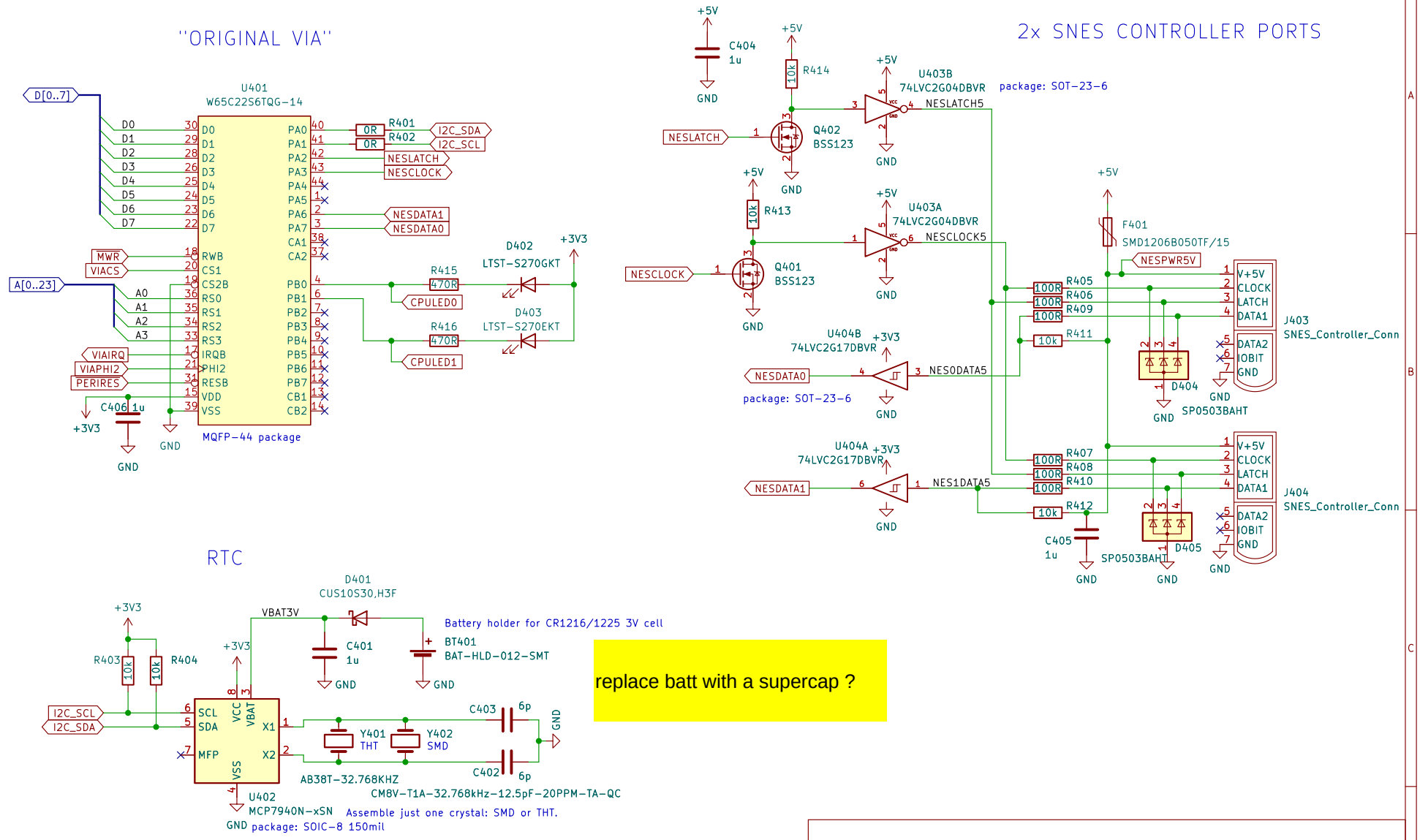
''ORIGINAL VIA''
U401
W65C22S6TQG-14
D[0..7]
A[0..23]
MWR
VIACS
VIAIRQ
VIAPHI2
PERIRES
C406 1u
MQFP-44 package
R401 0R
R402 0R
I2C_SDA
I2C_SCL
NESLATCH
NESCLOCK
NESDATA1
NESDATA0
R415 470R
CPULED0
R416 470R
CPULED1
D402 LTST-S270GKT
D403 LTST-S270EKT
+3V3
GND
2x SNES CONTROLLER PORTS
C404 1u
R414 10k
U403B 74LVC2G04DBVR package: SOT-23-6
Q402 BSS123
R413 10k
U403A 74LVC2G04DBVR
Q401 BSS123
U404B 74LVC2G17DBVR
U404A 74LVC2G17DBVR
package: SOT-23-6
F401 SMD1206B050TF/15
NESPWR5V
R405 100R
R406 100R
R409 100R
R411 10k
R407 100R
R408 100R
R410 100R
R412 10k
C405 1u
D404
D405
SP0503BAHT
J403 SNES_Controller_Conn
J404 SNES_Controller_Conn
V+5V
CLOCK
LATCH
DATA1
DATA2
IOBIT
RTC
D401 CUS10S30,H3F
VBAT3V
C401 1u
BT401 BAT-HLD-012-SMT
Battery holder for CR1216/1225 3V cell
R403 10k
R404 10k
I2C_SCL
I2C_SDA
Y401 THT
Y402 SMD
C403 6p
C402 6p
AB38T-32.768KHZ
CM8V-T1A-32.768kHz-12.5pF-20PPM-TA-QC
U402
MCP7940N-xSN
package: SOIC-8 150mil
Assemble just one crystal: SMD or THT.
replace batt with a supercap ?
OpenX65 MOTHERBOARD
FOR X65.EU DESIGNED BY JSYKORA.INFO
Sheet: /VIA, RTC, SNES/
File: via_rtc.kicad_sch
Title: OpenX65 – VIA, SNES Controller, RTC
Size: A4
Date: 2023-03-30
Rev: rev01
KiCad E.D.A. kicad (6.0.7)
Id: 4/7

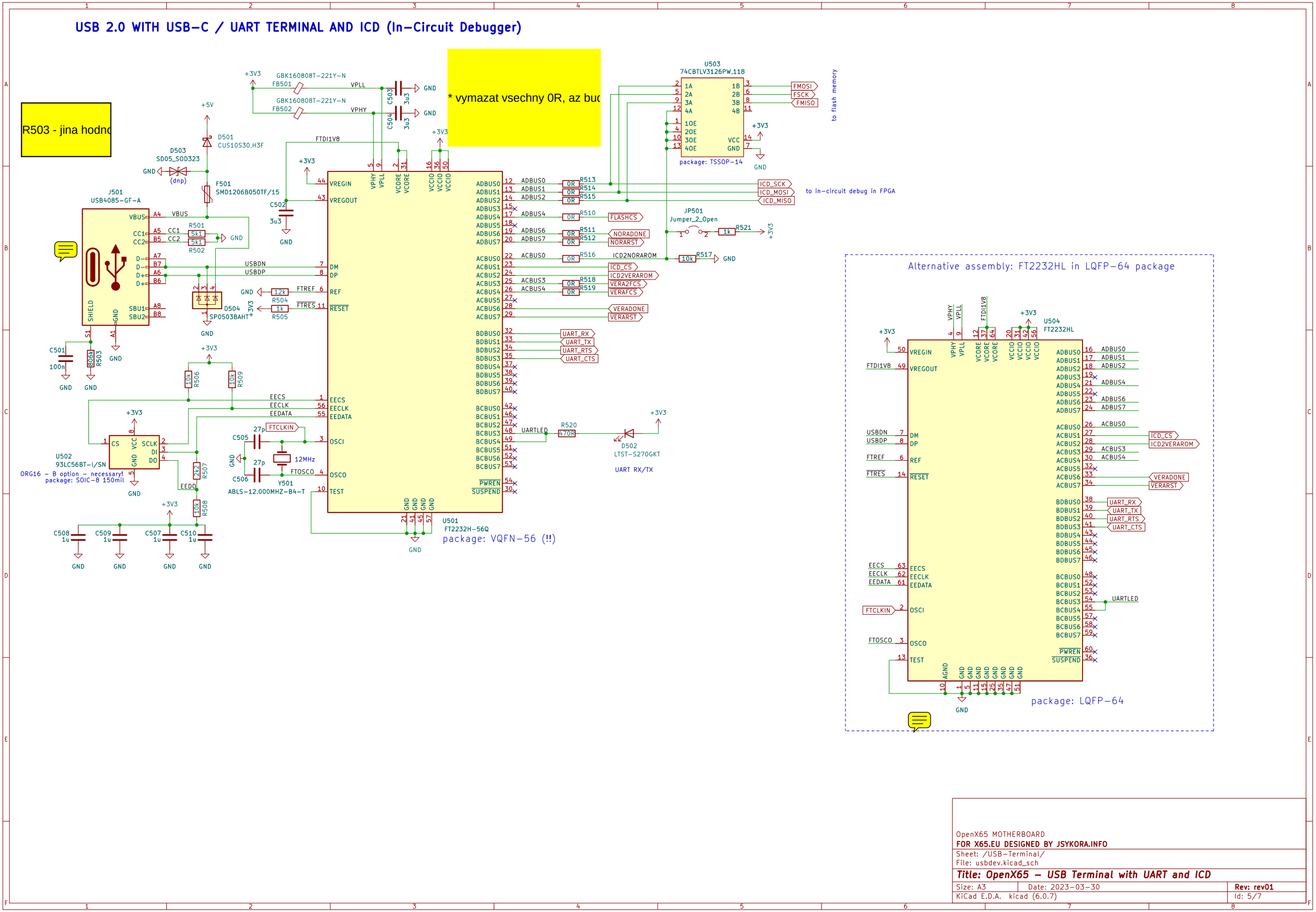
USB 2.0 WITH USB-C / UART TERMINAL AND ICD (In-Circuit Debugger)
R503 - jina hodno
* vymazat vsechny 0R, az buc
J501
USB4085-GF-A
D501
CUS10S30,H3F
D503
SD05_SOD323
F501
SMD1206B050TF/15
D504
SP0503BAHT
U502
93LC56BT-I/SN
ORG16 - B option - necessary!
package: SOIC-8 150mil
Y501
ABLS-12.000MHZ-B4-T
U501
FT2232H-56Q
package: VQFN-56 (!!)
U503
74CBTLV3126PW,118
package: TSSOP-14
to flash memory
to in-circuit debug in FPGA
JP501
Jumper_2_Open
D502
LTST-S270GKT
UART RX/TX
Alternative assembly: FT2232HL in LQFP-64 package
U504
FT2232HL
package: LQFP-64
OpenX65 MOTHERBOARD
FOR X65.EU DESIGNED BY JSYKORA.INFO
Sheet: /USB-Terminal/
File: usbdev.kicad_sch
Title: OpenX65 - USB Terminal with UART and ICD
Size: A3
Date: 2023-03-30
Rev: rev01
KiCad E.D.A. kicad (6.0.7)
Id: 5/7

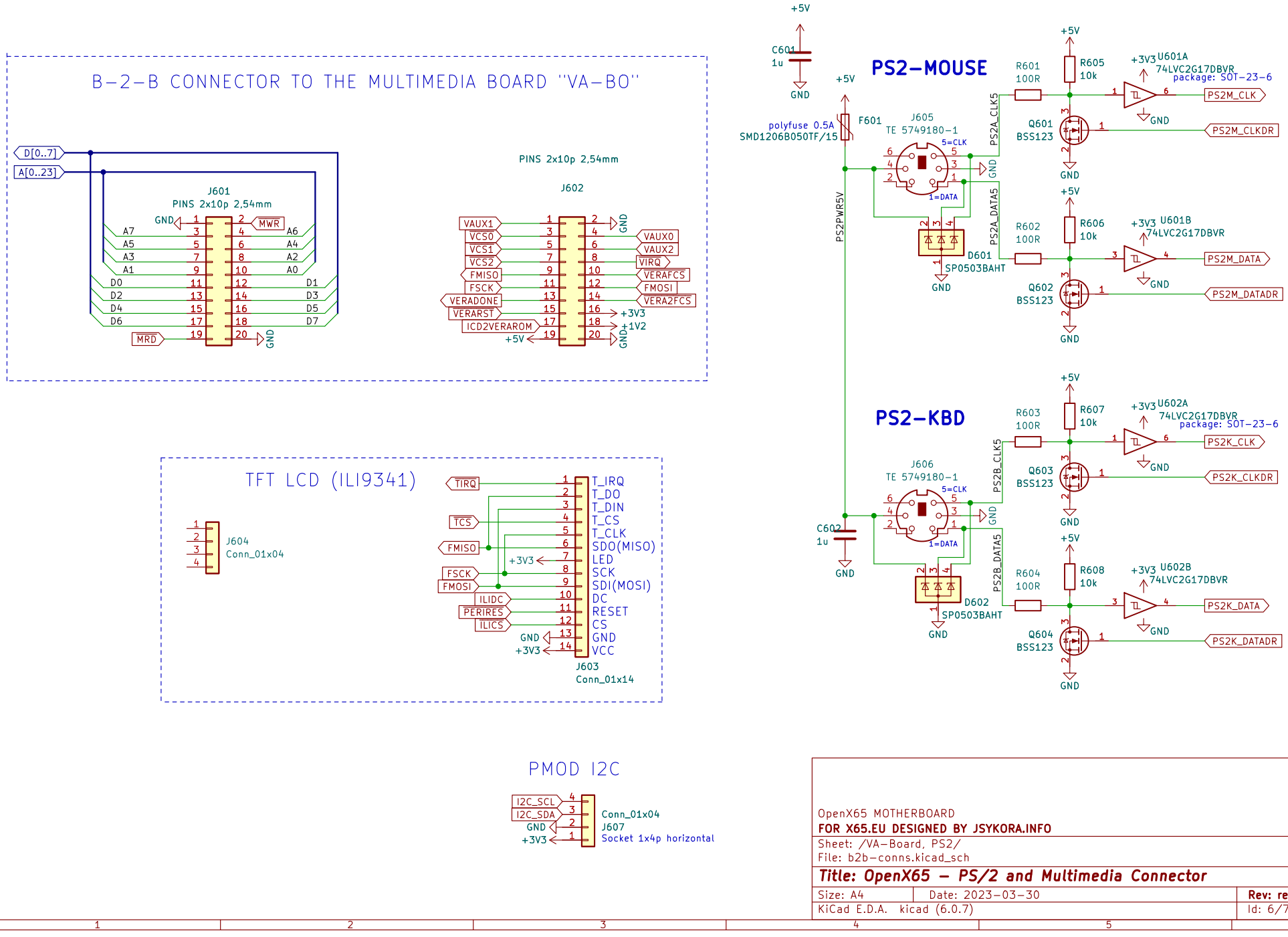


OpenX65 MOTHERBOARD

**FOR X65.EU DESIGNED BY JSYKORA.INFO**

Sheet: /VA-Board, PS2/

File: b2b-conns.kicad_sch

***Title: OpenX65 – PS/2 and Multimedia Connector***

| Size: A4 | Date: 2023-03-30 | **Rev: rev01** |
|---|---|---|
| KiCad E.D.A. kicad (6.0.7) | | Id: 6/7 |

# POWER SUPPLY
## 5V -> 3.3V, 1.2V

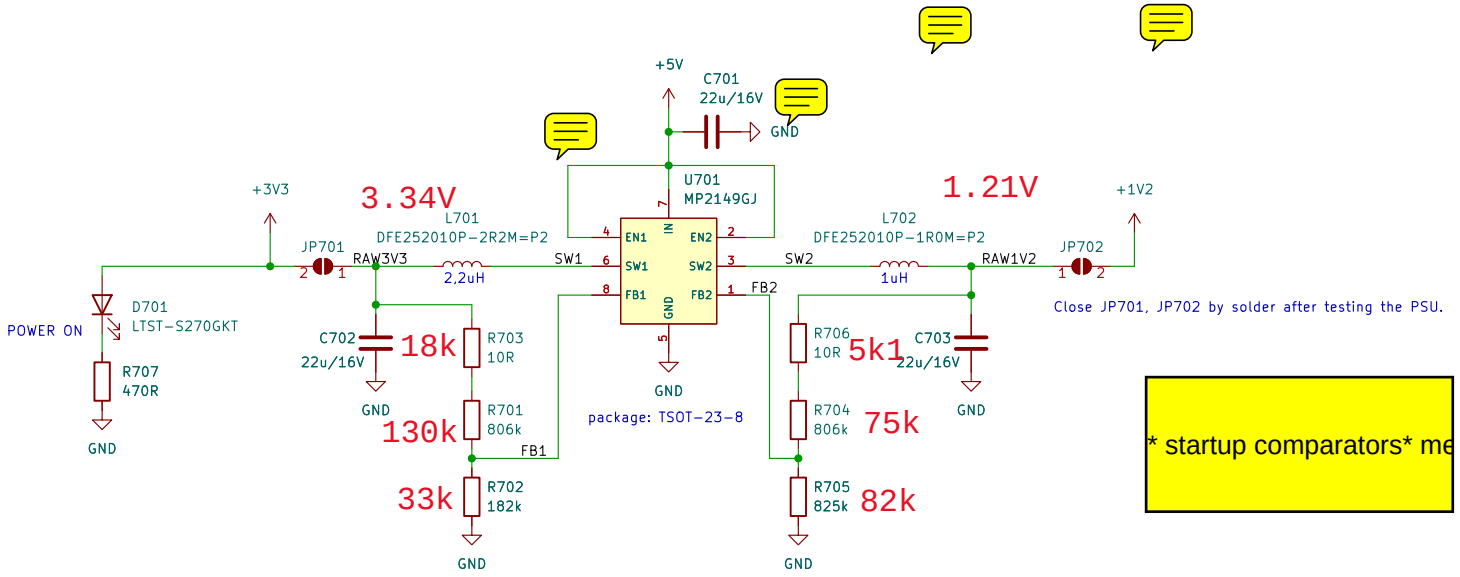


Alternative power input connector

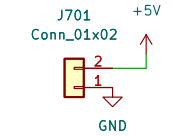


GND testpoints

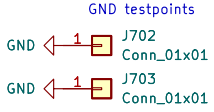


OpenX65 MOTHERBOARD
**FOR X65.EU DESIGNED BY JSYKORA.INFO**

Sheet: /Power Supply/
File: pwrsup.kicad_sch

***Title: OpenX65 – Power Supply***

| | | |
|---|---|---|
| Size: A4 | Date: 2023-03-30 | **Rev: rev01** |
| KiCad E.D.A. kicad (6.0.7) | | Id: 7/7 |