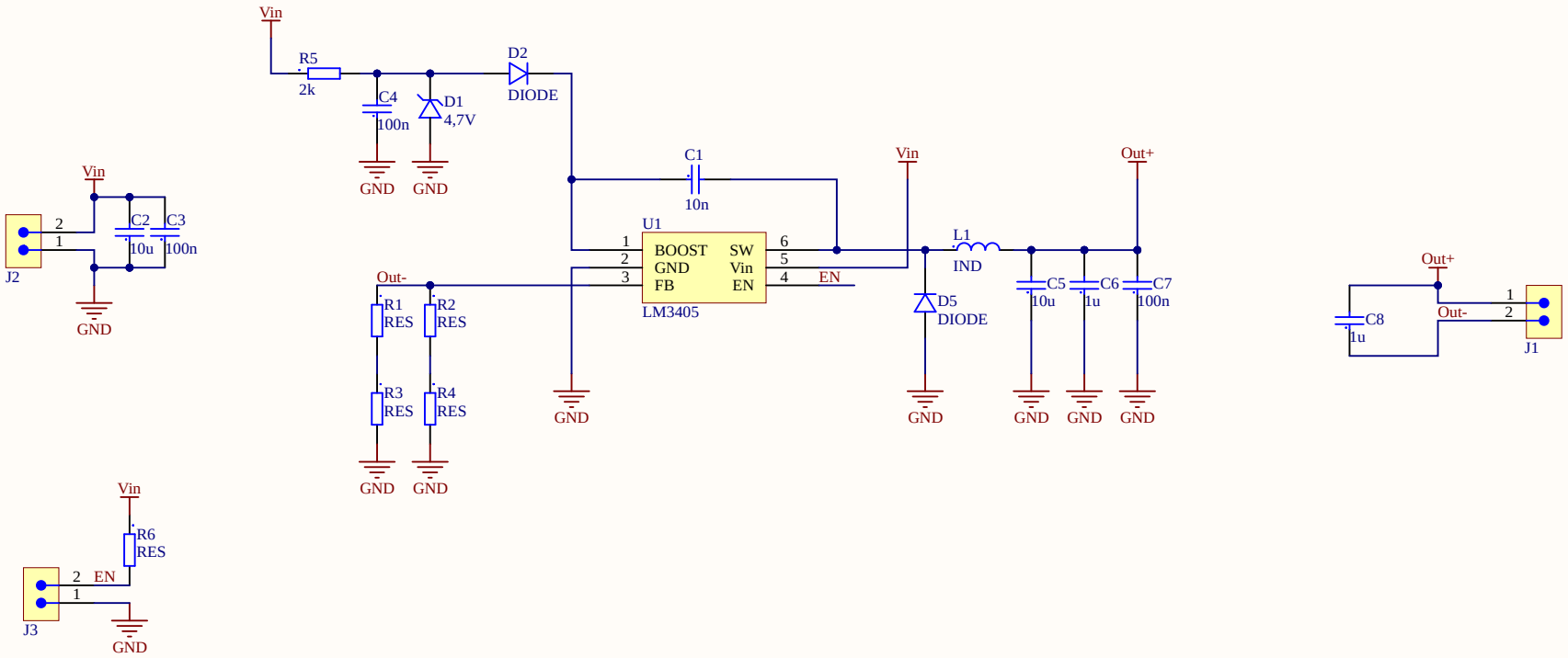
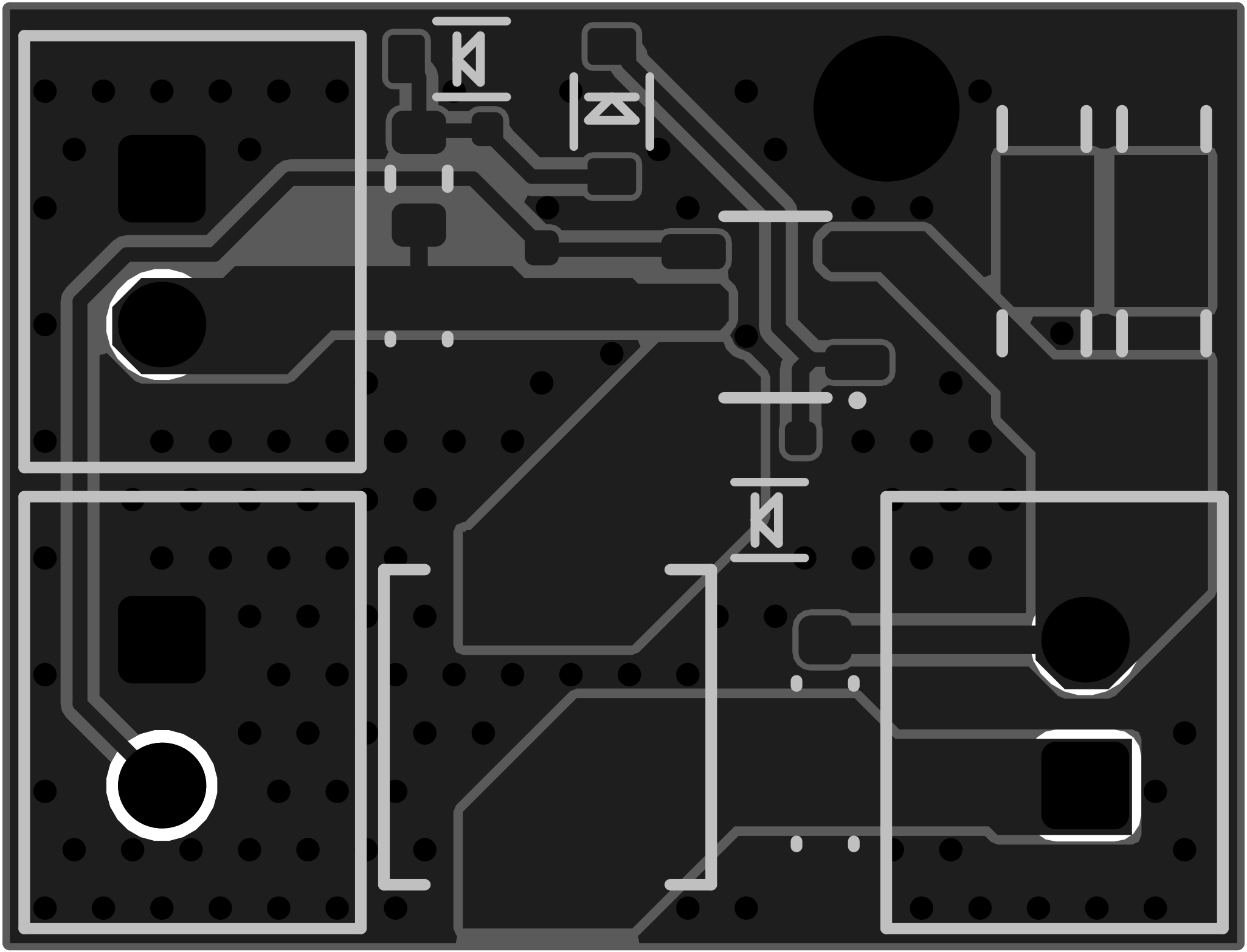
Title		
Size A4	Number	Revision
Date: 10/02/2025		Sheet of
File: C:\Users\..\BuckLedDriver.SchDoc		Drawn By: