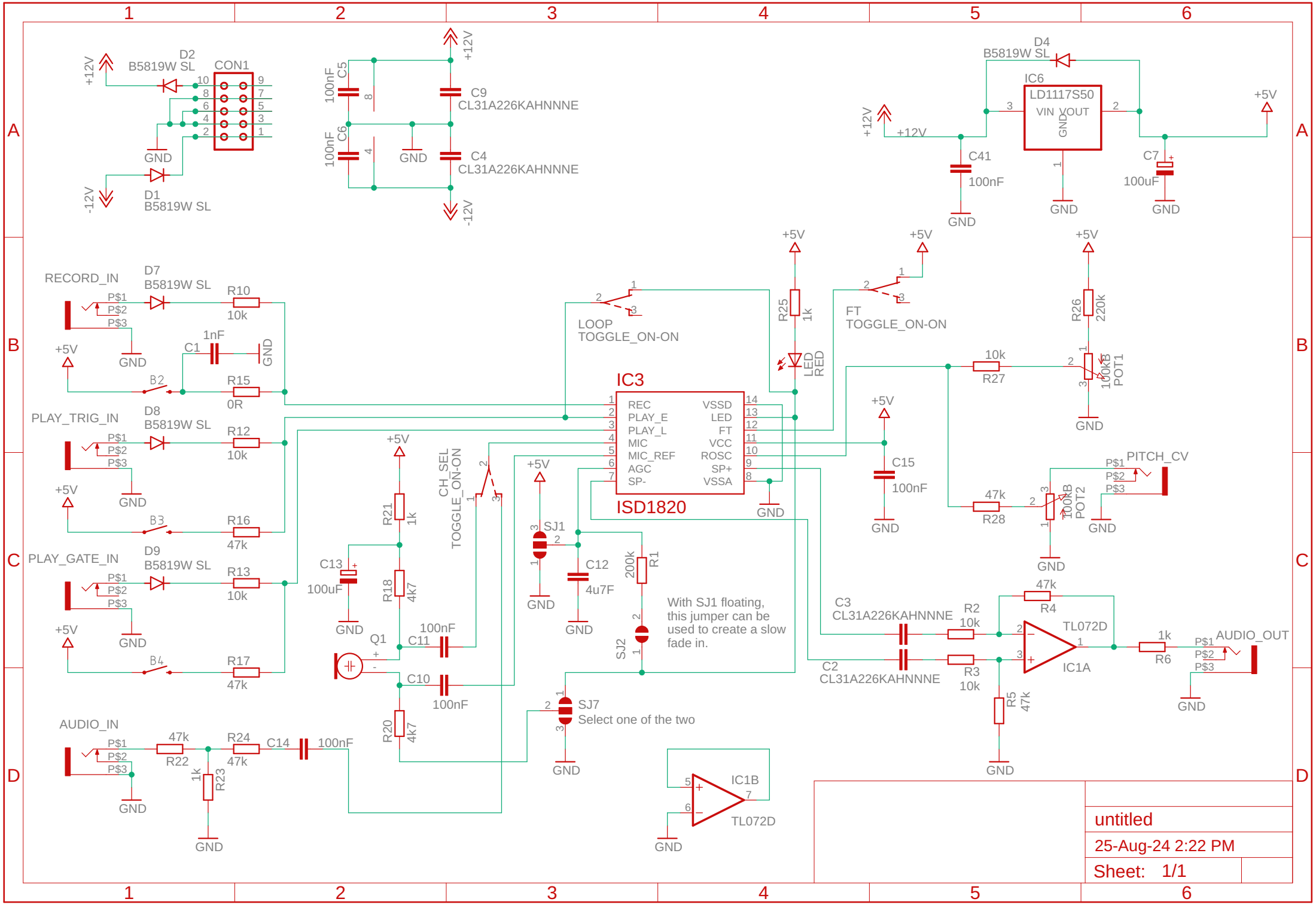
D2
B5819W SL
CON1
+12V
-12V
GND
D1
B5819W SL
100nF C5
100nF C6
C9
CL31A226KAHNNNE
C4
CL31A226KAHNNNE
D4
B5819W SL
IC6
LD1117S50
VIN VOUT
GND
C41
100nF
C7
100uF
+5V
RECORD_IN
D7
B5819W SL
R10
10k
C1
1nF
B2
R15
0R
PLAY_TRIG_IN
D8
B5819W SL
R12
10k
B3
R16
47k
PLAY_GATE_IN
D9
B5819W SL
R13
10k
B4
R17
47k
AUDIO_IN
R22
47k
R24
47k
C14
100nF
R23
1k
LOOP
TOGGLE_ON-ON
R25
1k
LED
RED
FT
TOGGLE_ON-ON
R26
220k
R27
10k
100kB
POT1
IC3
REC
PLAY_E
PLAY_L
MIC
MIC_REF
AGC
SP-
VSSD
LED
FT
VCC
ROSC
SP+
VSSA
ISD1820
C15
100nF
R28
47k
100kB
POT2
PITCH_CV
CH_SEL
TOGGLE_ON-ON
R21
1k
R18
4k7
C13
100uF
Q1
C11
100nF
C10
100nF
R20
4k7
SJ1
C12
4u7F
R1
200k
SJ2
With SJ1 floating,
this jumper can be
used to create a slow
fade in.
SJ7
Select one of the two
C3
CL31A226KAHNNNE
C2
CL31A226KAHNNNE
R2
10k
R3
10k
R4
47k
R5
47k
TL072D
IC1A
R6
1k
AUDIO_OUT
IC1B
TL072D
untitled
25-Aug-24 2:22 PM
Sheet: 1/1