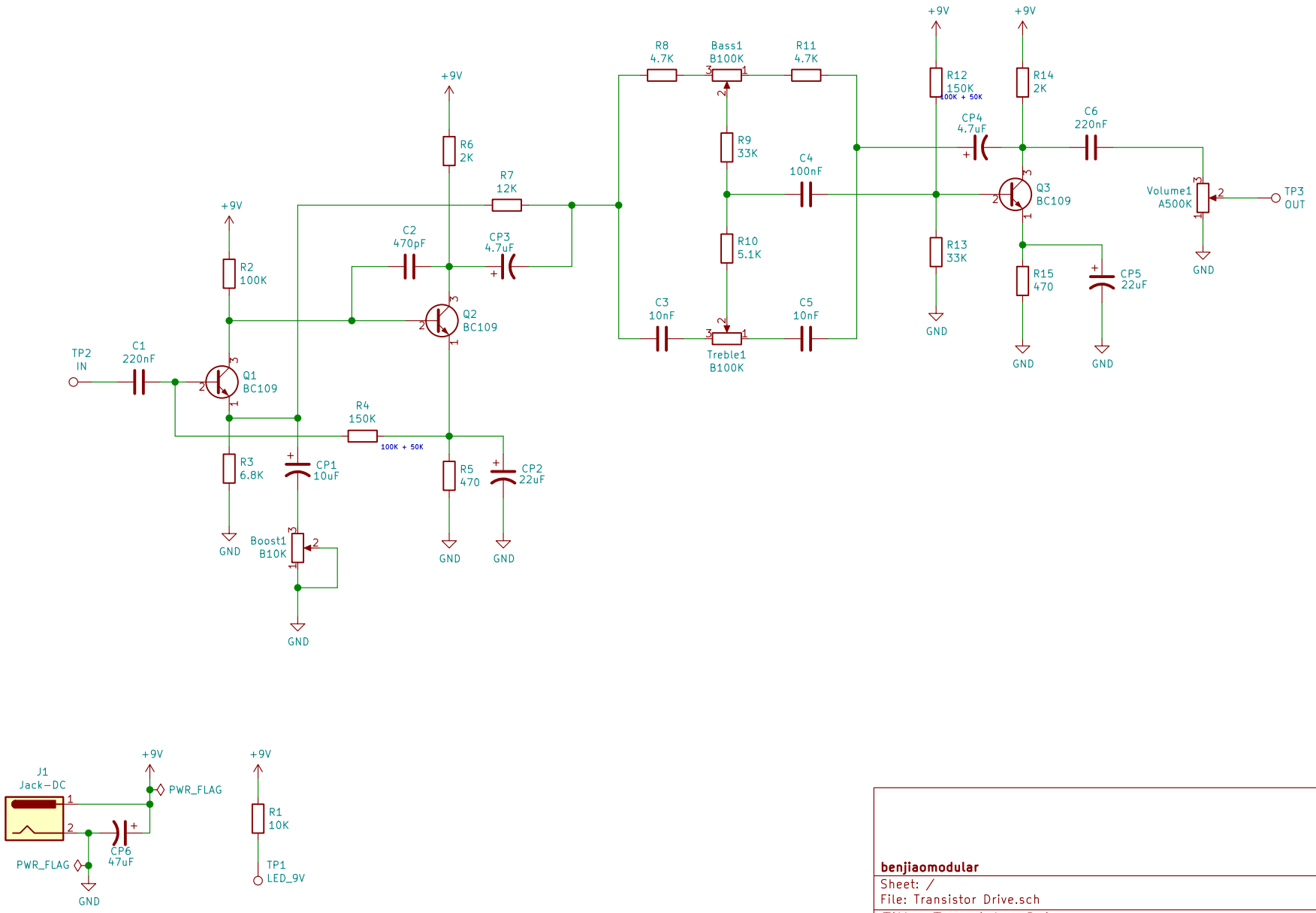

benjiaomodular

Sheet: /

File: Transistor Drive.sch

Title: Transistor Drive

Size: A4	Date:	**Rev: v1.0**
KiCad E.D.A. kicad 5.1.9+dfsg1-1bpo10+1		Id: 1/1