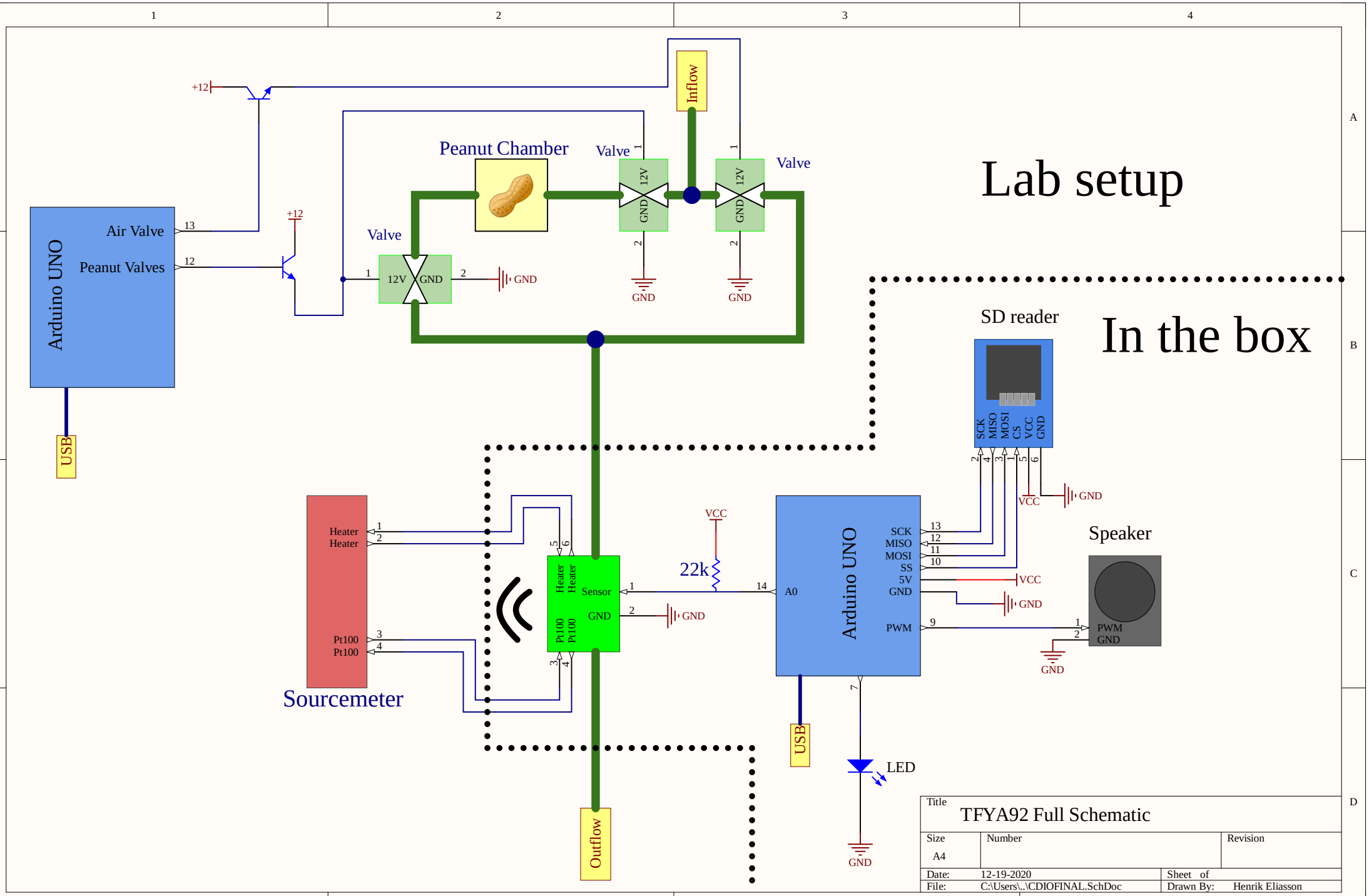

Title		
TFYA92 Full Schematic		
Size A4	Number	Revision
Date: 12-19-2020		Sheet of
File: C:\Users\..\CDIOFINAL.SchDoc		Drawn By: Henrik Eliasson