CivE 414
Structural Concrete Design

Topic 6
COLUMNS

Axial Compression and Bending

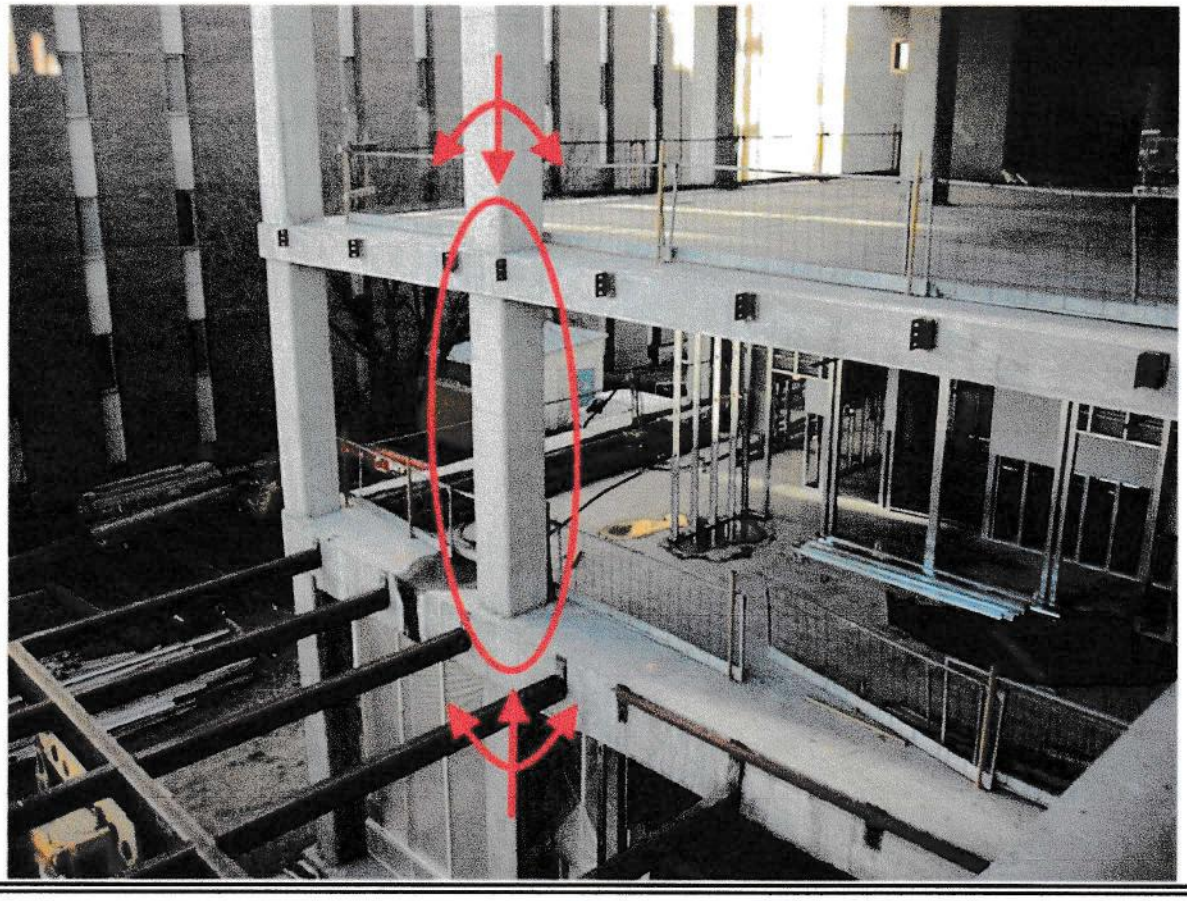

CONCRETE COLUMNS

- Primarily compression members
- In general, must design for combined axial load and bending
- Usually vertical, but may be inclined or horizontal in trusses and frames

Because columns are subjected primarily to compression loading, stability effects must be considered. This is done as follows:

– If these effects have little or no impact on the column capacity, we have what we call a "short" column. In this case, stability effects can be safely ignored.

– If stability effects significantly reduce the column capacity, we have a "slender" column. In this case, stability effects must be considered explicitly in the design.

- **Short columns:** no second order effects or buckling
- **Slender columns:** influenced by second order effects (buckling may occur)

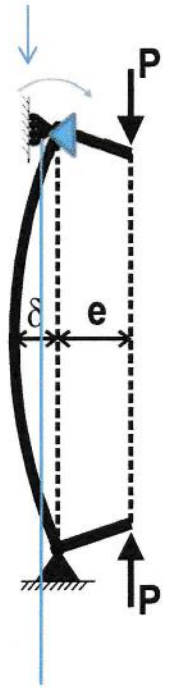

$$M_{max} = P(e + \delta)$$

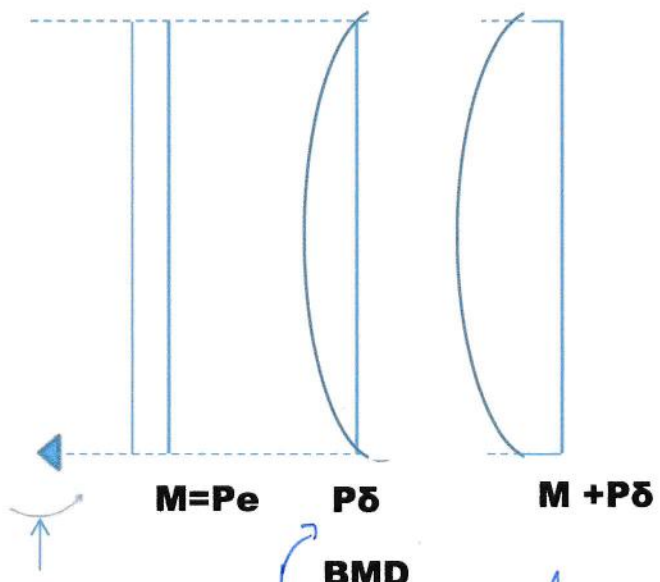

Question: how large is δ

TYPES OF COLUMNS

1. Tied Columns

= always a closed loop, unlike U-bars

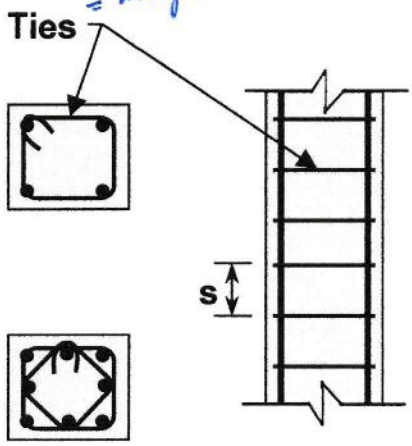

- Ties are used mainly to prevent **buckling** of the longitudinal bars and consequently, to prevent the concrete cover from spalling off.
- For a large number of bars, other tie arrangements may be required.

2. Spiral Columns

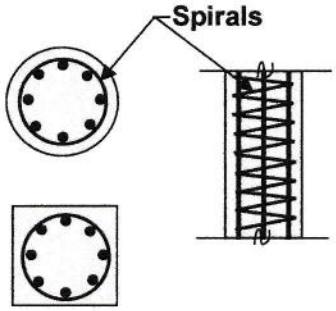

- Spirals are helical ties (continuous) which contain the concrete and prevent local buckling.
- Spirals may be used in square columns.
- Ductility and ultimate strength are increased with the use of spirals.

! good for seismic

confinement increases compressive strength

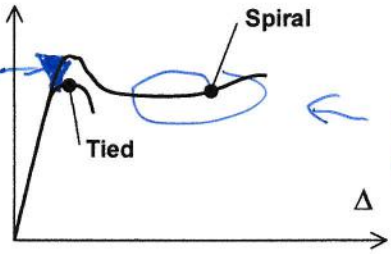

Load vs Deflection for Tied & Spiral Columns

← increases ductility

3. Composite Columns

Combination of structural steel shape and reinforced concrete

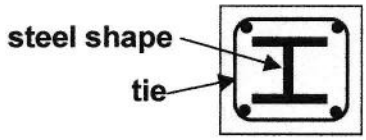

COLUMNS IN BENDING

- Very rare for a column to be subjected to pure axial load
- Both vertical loads and lateral loads produce moments in frame columns

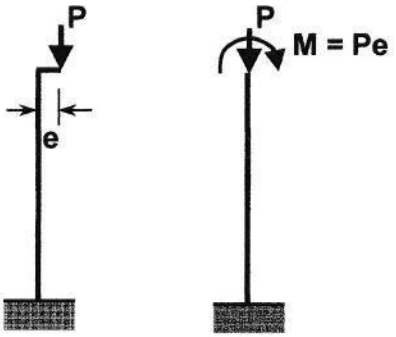

For $e = 0$ → pure axial load ($M = 0$)
$e = \infty$ → pure bending ($P = 0$)

PURE BENDING

$M > 0$, $P = 0$ → $e = \infty$

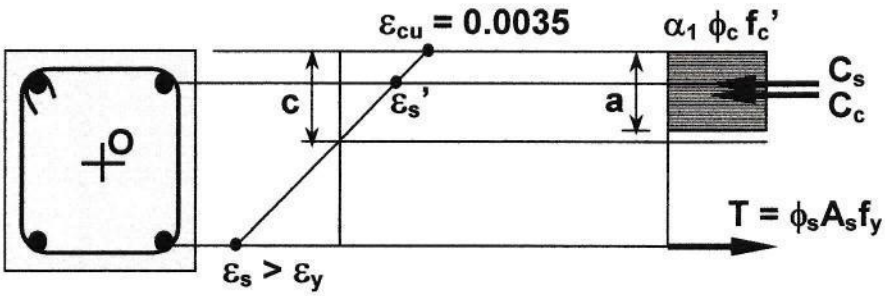

Short column to draw

Summation of forces: $\mathbf{C_c + C_s - T = 0}$

Summation of moments: $\mathbf{M_r = C_c(d - a/2) + C_s(d - d')}$

(no axial load, any point can be used for summation of moments)

MOMENT AND AXIAL LOAD

M > 0, P > 0 → 0 < e < ∞

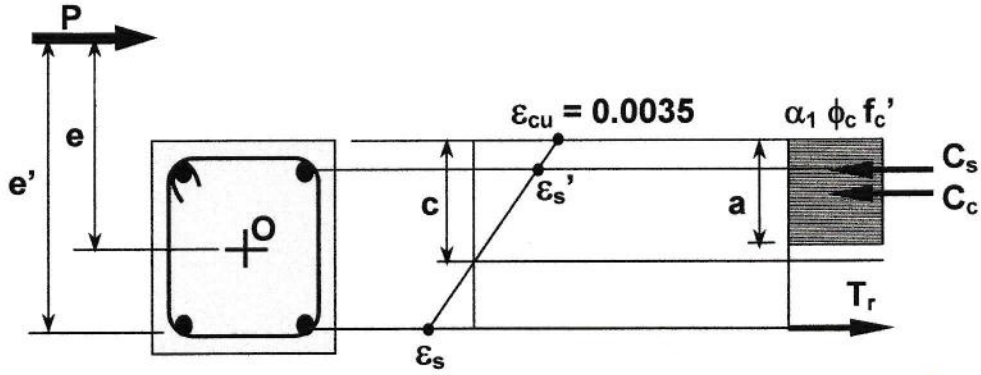

1. Summation of forces: $\mathbf{P = C_c + C_s - T}$ Axial load

2 Summation of moments:

a) about O *(centroid)*: ← preferred as this corresponds to structural analysis results

M $$\mathbf{Pe = C_c(h/2 - a/2) + C_s(h/2 - d') + T_r(d - h/2)}$$

or

location of tensile reinforcement

b) about T_r: $$\mathbf{Pe' = C_c(d - a/2) + C_s(d - d')}$$

where $\mathbf{e' = e + (d - h/2)}$

Two unknowns: **P and a** (for a given e)
e and a (for a given P)

(a is related to strain in tension reinforcement)

Two equations: $\mathbf{\Sigma F = 0}$

$\mathbf{\Sigma M = 0}$

➢ **of P_r & M_r**

ANALYSIS OF COLUMN CAPACITY

- Frame analysis results give P_f and M_f for each column
- Check adequacy of a given column section and reinforcement

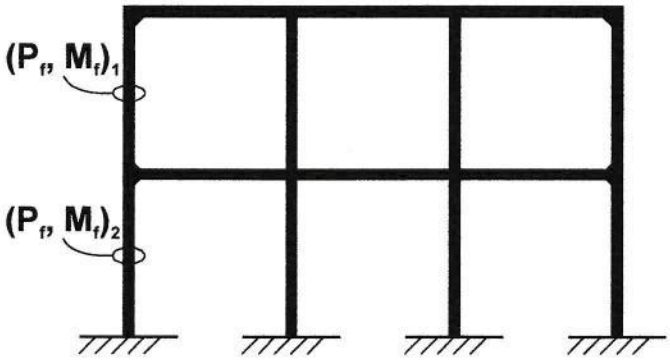

APPROACH 1 – ANALYSIS FOR A GIVEN ECCENTRICITY

Given: $\mathbf{e = \frac{M_f}{P_f}}$ $\mathbf{e' = e + (d - h/2)}$

- Looking for $\mathbf{P_r}$ & $\mathbf{M_r}$

Equilibrium: $\mathbf{P = C_c + C_s - T}$

Moment about T: $\mathbf{Pe' = C_c(d - a/2) + C_s(d - d')}$

Unknowns: a, P

Solution: $P_r = P$ for given "e"

$M_r = P\,e$

Verify: $P_r \geq P_f$ for column in question
$M_r \geq M_f$

APPROACH 2 – ANALYSIS FOR A GIVEN AXIAL LOAD

Given: $P_r = P_f$ find M_r *(and e)*

Equations:

Equilibrium: $\mathbf{P_f = C_c + C_s - T}$

Moment about T: $\mathbf{P_f\, e' = C_c\left(d - a/2\right) + C_s\left(d - d'\right)}$

Unknowns: a, e'

Solution: $\mathbf{e = e' - \left(d - h/2\right)}$ for given "P_f"
$M_r = P_f\, e$

Verify: $M_r \geq M_f$ for column in question

APPROACH 3 – GENERATE P-M INTERACTION DIAGRAM

- Useful for several combinations of P_f and M_f

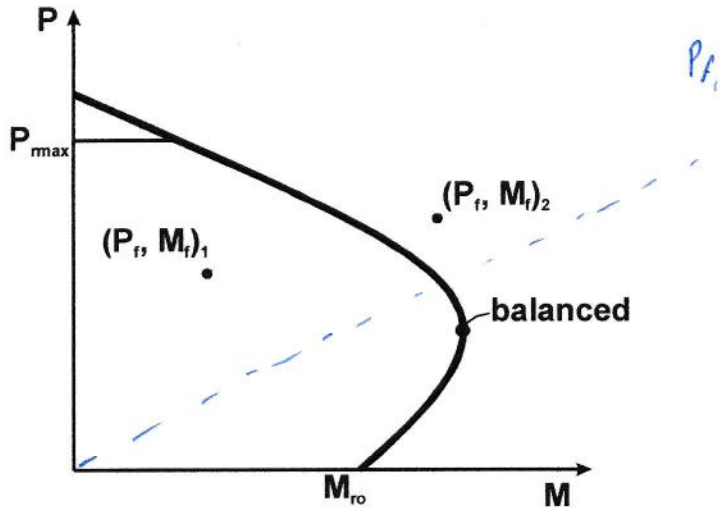

P_f, M_f must be within interaction diagram

Interaction Diagrams

- Columns are usually loaded by a compressive axial load and a moment. Combination
- Bending moments can be introduced at column ends via monolithically cast beams or slabs or due to eccentricity of the point of axial load application, with respect to the column centroid.

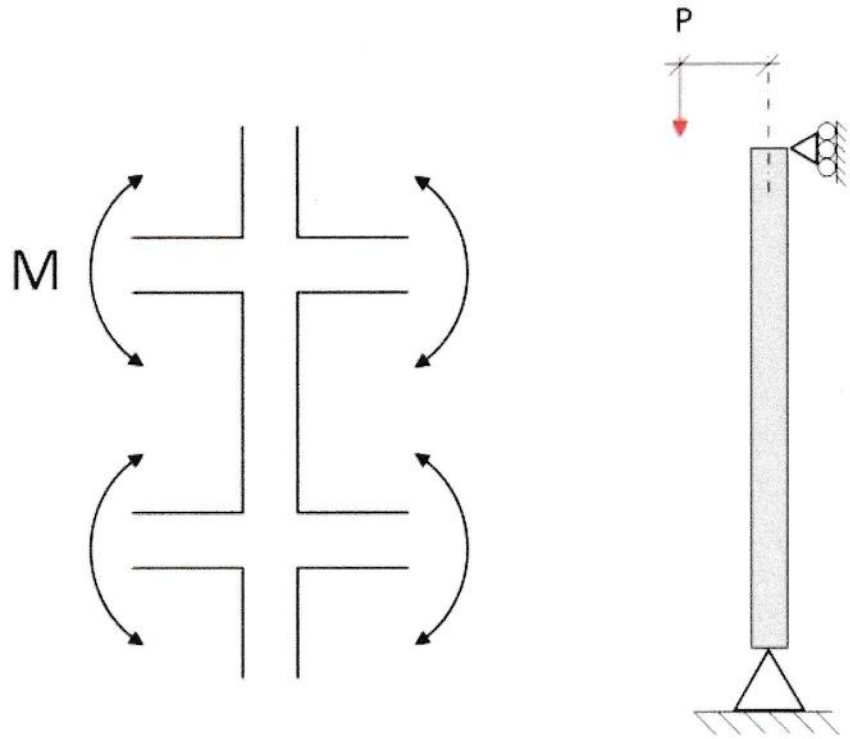

Under combined axial and bending loads, the strength of a column is generally lower than in the pure axial load case, because the axial and bending stresses add together, reaching the concrete compressive strength at a lower load level. This is accounted for in design through the use of "interaction diagrams".

For an ideal elastic, brittle material, the theoretical interaction diagram can be determined as follows:

- Failure occurs when the strength, $f_{cu} = f_{tu} = f$, is reached.
- Failure of the x-section is thus defined by the locus of points:

$$f = \frac{P}{A} \pm \frac{M \cdot y}{I}$$ *(Stress is a combination of stress due to axial load and moment)*

– This expression can be rewritten (normalized) :

$$1 = \frac{P}{A \cdot f} \pm \frac{M \cdot y}{I \cdot f} = \frac{P}{P_0} \pm \frac{M}{M_0}$$

– The resulting "interaction diagram" takes the following form:

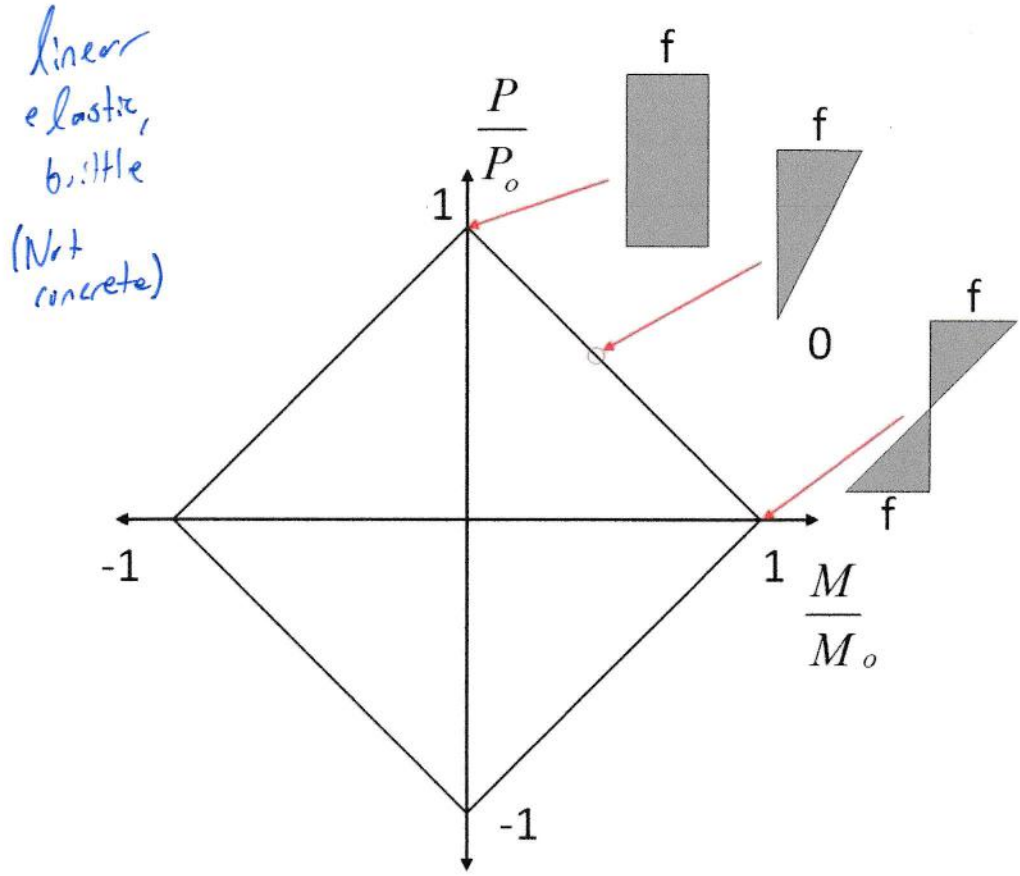

Benjamin Klassen

For reinforced concrete columns, the interaction diagram can be determined by analyzing the column x-section under various strain distributions, corresponding with different P-M combinations:

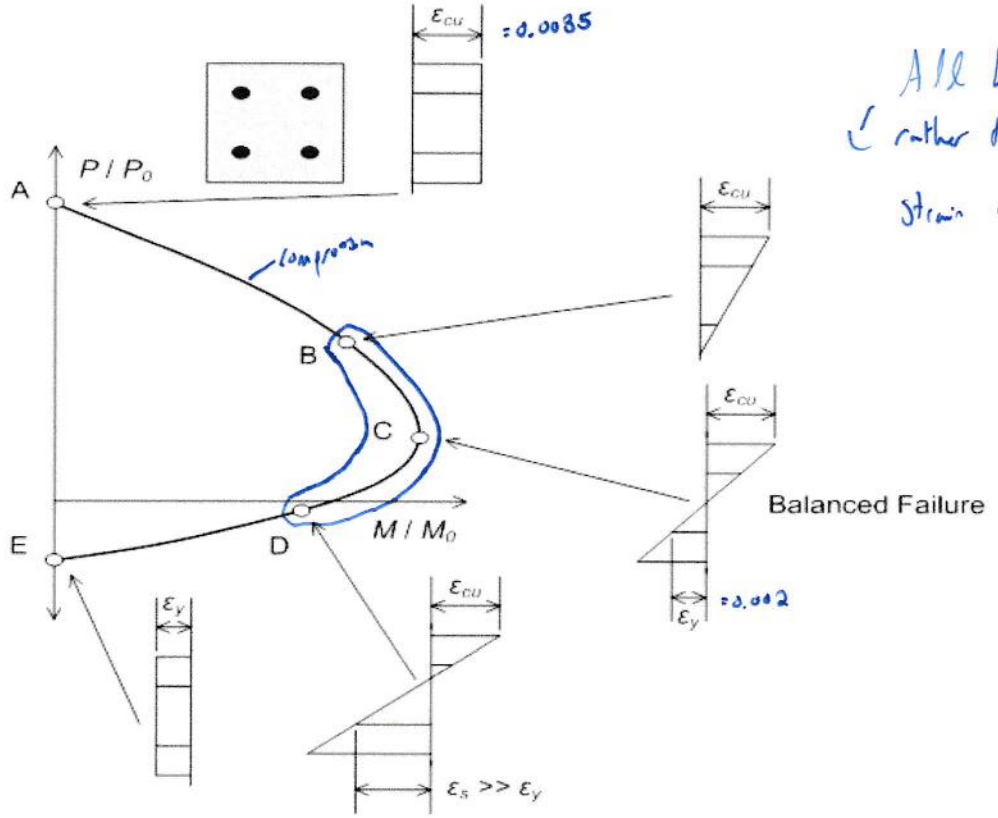

All based on strain distribution, rather than stress, as strain easier to predict

Each point on the interaction diagram represents the maximum axial load that can be applied at a given eccentricity.

Three Types of Failure:

1. Tension failure $\varepsilon_s > \varepsilon_y$
   $e > e_b$
2. Balanced failure $\varepsilon_s = \varepsilon_y$
   $e = e_b$
3. Compression failure $\varepsilon_s < \varepsilon_y$
   $e < e_b$

- To determine points A-E indicated in the preceding diagram (and others), the following assumptions are made:

– ε_{cu} = 0.0035

– $\varepsilon_y = f_y / E_s$ = 400 MPa / 200 000 MPa = 0.002

Example 1

- Calculate factored balanced failure point for the column in the Figure

$f_c' = 40\ MPa$

$8 - 20M\ bars$

$f_y = 400\ MPa$

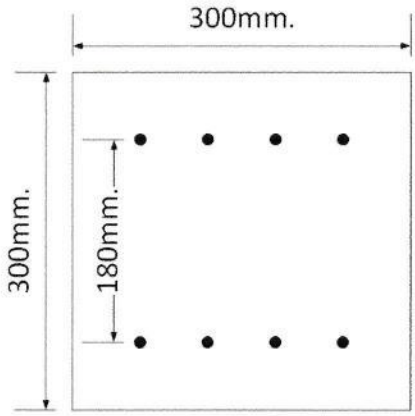

Solution *(compression positive in this example)*

$C = 240 \cdot \frac{0.0035}{0.002} = 152.7mm$

$\varepsilon_{s1} = -0.002 \quad \varepsilon_c = -0.0035$ *(given)*

$\varepsilon_{s2} = 0.0035\left(\frac{152.7-60}{152.7}\right) = 0.00213$

$f_{s1} = -400\ MPa\ (tension)$ E

$f_{s2} = MIN(0.00213 \cdot 200GPA, 400MPa)$

$f_{s2} = 400\ MPa$

$\beta_1 = 0.97 - 0.0025(40) = 0.87$

$a = \beta_1 \cdot c = 0.87 \cdot 152.7 = 132.9mm$

$\alpha_1 = 0.85 - 0.0015(40) = 0.79 > 0.67\ \ ok$

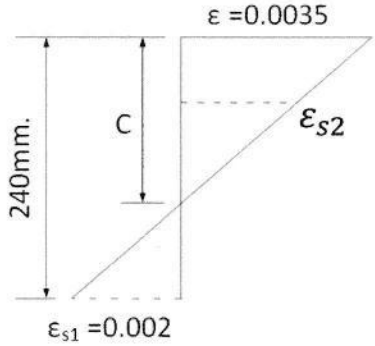

Concrete

$C_{rc} = \alpha_1 \cdot \phi_c \cdot f_c' \cdot a \cdot b = 0.79 \cdot 0.65 \cdot 40 \cdot 132.9 \cdot 300 = 818.8\ kN$

Steel

$F_{rs1} = \phi_s \cdot f_{s1} \cdot A_{s1} = 0.85 \cdot 400 \cdot 1200\ \times 10^{-3} = -408\ kN$

$F_{rs} = (\phi_s \cdot f_s - \alpha_1 \cdot \phi_c \cdot f_c')A_{s2} = (0.85 \cdot 400 - 0.79 \cdot 0.65 \cdot 40) \cdot 1200 \times 10^{-3}$

$\alpha_1 \cdot \phi_c \cdot f_c'$ already accounted for when calculating C_{rc} where area replaced by compression steel was not accounted for.

$F_{rs2} = 383.4\ kN$

$P_r = +818.8 + 383.4 - 408 = 794\ kN$

Moment around centroidal axis

$$M_r = C_{rc}\left(\frac{h}{2} - \frac{a}{2}\right) + \sum_{i=1}^{n} F_{rsi}\left(\frac{h}{2} - d_i\right)$$

$$M_r = 818.8\left(150 - \frac{132.9}{2}\right) - 408(150 - 240) + 383.4(150 - 60)$$

$$M_r = 139.6\ kN \cdot m$$

Steps for calculating points on the interaction diagram:

1. Choose the strain distribution (through the depth of the column)

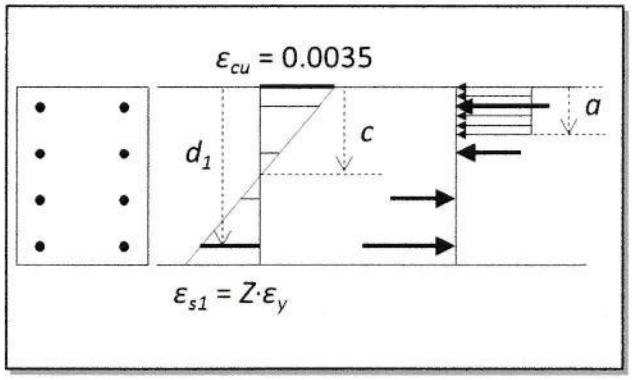

2. Determine depth to neutral axis, *c*, by inspection
3. Calculate depth of rectangular stress block, $a = \beta_1 \cdot c$ where $\beta_1 = 0.97 - 0.0025 \cdot f'_c \geq 0.67$
4. Calculate compression force in the concrete, $C_{rc} = \alpha_1 \cdot \phi_c \cdot f'_c \cdot a \cdot b$ where *b* is the column width, where

$\alpha_1 \quad = \quad 0.85 \; - \; 0.0015\, f'_c \; \geq \; 0.67$

5. Calculate forces in compression and tension reinforcement:
   a. Tension reinforcement force, $F_r = \phi_s \cdot f_s \cdot A_s$
   b. Compression reinforcement force, $F_r = \left(\phi_s \cdot f_s - \alpha_1 \cdot \phi_c \cdot f'_c\right) \cdot A_{st}$
6. Calculate the axial force and moment, *P* and *M*, by assuming force and moment equilibrium of the section

Short Columns

Under purely compressive loading, the unfactored resistance of a column is a function of: the x-sectional areas and strengths of the concrete and longitudinal reinforcement present, i.e.:

– $P_0 = \overset{\text{concrete}}{\alpha_1 \cdot f'_c \cdot \left(A_g - A_{st}\right)} + \overset{\text{steel}}{f_y \cdot A_{st}}$

– where: A_g = gross x-section area of column

A_{st} = area of reinforcing steel

f'_c = specified compressive strength of concrete

f_y = specified yield strength of reinforcing steel

– $\alpha_1 = 0.85 - 0.0015 \cdot f'_c \geq 0.67$ *[CSA A23.3 §10.1.7].* *(equivalent stress block factor)*

Short Column Analysis and Design

In order to account for unintended eccentricities, the maximum load that a column can carry is limited *[CSA A23.3 §10.10.4]*:

– $P_{r,max} = 0.80 \cdot P_{r0}$ for tied columns (80% theoretical strength

– $P_{r,max} = 0.85 \cdot P_{r0}$ for spiral columns (85%)

Where: $P_{r0} = \alpha_1 \cdot \phi_c \cdot f'_c \cdot \left(A_g - A_{st}\right) + \phi_s \cdot f_y \cdot A_{st}$

Example 2: ***Calculate the factored axial resistance of the tied column shown.***

ties so longitudinal reinforcement doesn't buckle

Also provide some confinement

Assume:

$f'_c = 30$ MPa

$f_y = 400$ Mpa

$\alpha_1 = 0.81$ $(\alpha_1 = 0.85 - 0.0015f'_c) \geq 0.67$

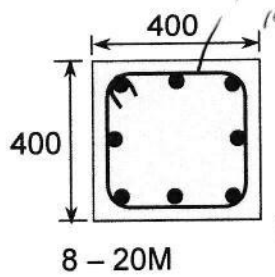

$$A_g = 400 \times 400 = 160{,}000\,mm^2$$

$$A_s = 8 \times 300\,mm^2 = 2{,}400\,mm^2$$

$$P_{ro} = \alpha_1 \phi_c f'_c \left(A_g - A_s\right) + \phi_s A_s f_y$$

$$= (0.81)(0.65)(30\,MPa)\left(160{,}000 - 2400\,mm^2\right)$$

$$+ (0.85)(400\,MPa)\left(2{,}400\,mm^2\right)$$

$$P_{ro} = 3305\,kN$$

Tied Column: k = 0.80 *(unintended eccentricities)*

$$P_{rmax} = 0.80(3305\,kN)$$

$$P_{rmax} = 2644\,kN$$

Interaction diagrams for design

- Can be generated and then compared with the calculated factored axial load and moment, or
- non-dimensional diagrams provided in *[CAC Handbook 2006]* can be used.
- Currently available for download and included in course material

$\left(\frac{P_r}{A_g}, \frac{M_r}{A_g h}\right)$ **for rectangular columns**

$\left(\frac{P_r}{h^2}, \frac{M_r}{h^3}\right)$ **for circular columns**

γ defines distance between reinforcement

Cutoff at 0.8

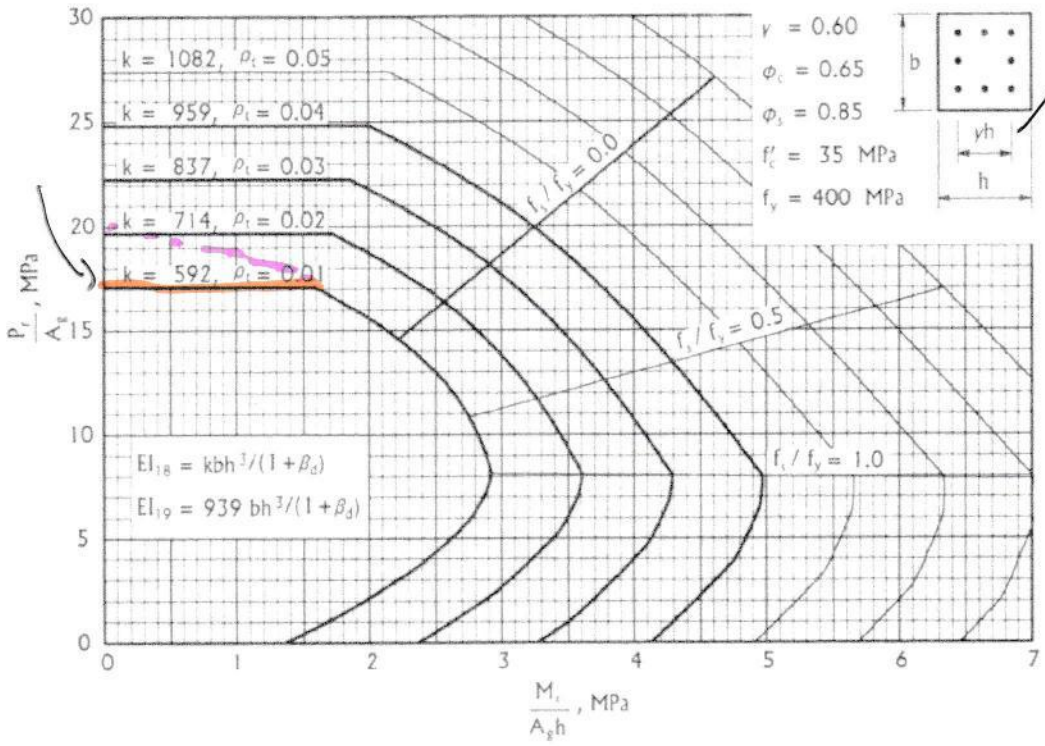

ANALYSIS FOR GIVEN ECCENTRICITY, e (FIND P_R AND M_R)

- $P_r e = M_r \quad \Rightarrow \quad e = \dfrac{M_r}{P_r}$ and $\dfrac{1}{e} = \dfrac{P_r}{M_r}$

- Slope of a line in the chart $= \dfrac{P_r/A_g}{M_r/A_g h}$

$$= \frac{P_r h}{M_r} = \frac{h}{e}$$

- Draw a straight line from the origin with a slope of h/e, and where it crosses the interaction curve for a given value of ρ_g determines the corresponding values of P_r/A_g and $M_r/A_g h$

ANALYSIS FOR GIVEN FACTORED AXIAL LOAD, P_F

- Set $P_r = P_f$ and calculate P_r/A_g
- Draw horizontal line at calculated value of P_r/A_g, and where it crosses the interaction curve for a given value of ρ_g determines the corresponding value of $M_r/A_g h$.
- Compute $e = M_r/P_r$.

in that case, why don't we just use concrete, unreinforced.)

Example 3: ***Calculate P_r and M_r when e = 309 mm for the cross-section shown below using Handbook Interaction Diagram.***
f'_c = 30 MPa, f_y = 400 MPa, A_s = 6 – 25M bars.

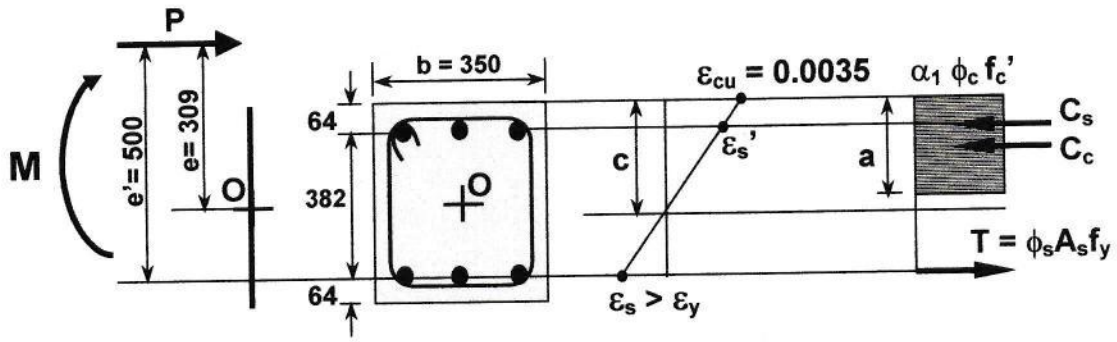

Compute section properties, γ, A_g, ρ_g

$\gamma h = 382mm$

$h = 382 + 2(64) = 510mm$

$\therefore \gamma = \frac{\gamma h}{h} = \frac{382}{510} = 0.75$

$A_g = bh = 350mm(510mm) = 178500mm^2$

$\rho_g = \frac{A_s}{A_g} = \frac{6(500mm^2)}{178500mm^2} = 1.68\%$

$= P_r e$

Use interaction diagrams to estimate P_r and M_r

To do this need to plot line with slope of h/e

e = 309mm (given)

$\therefore \frac{h}{e} = \frac{510}{309} = 1.65$

Since interaction diagrams for $\gamma = 0.75$ are not provided, we need to interpolate for $\gamma = 0.7$ *and* $\gamma = 0.8$

Use Table 7.11.7 and 7.11.8 provided by CAC

$\gamma = 0.7 \rightarrow Table\ 7.11.7$

$\rho = 1\% \rightarrow$ "x" $= 2.8 \therefore$"y" $=$mx $= 1.65(2.8) = 4.62$

$\rho = 2\% \rightarrow$ "x" $= 4.24$, "y" $= 6.996$

Use linear interpolation to find values for $\rho = 1.68\%$

$$\frac{x - 2.8}{1.68 - 1} = \frac{4.24 - 2.8}{2 - 1} \rightarrow x = 3.78$$

$$\frac{y - 4.62}{1.68 - 1} = \frac{6.996 - 4.62}{2 - 1} \rightarrow y = 6.235$$

$\gamma = 0.8 \rightarrow Table\ 7.11.8$

$\rho = 1\% \rightarrow$ "x" $= 3.05$, "y" $= 5.0325$

$\rho = 2\% \rightarrow$ "x" $= 4.6$, "y" $= 7.59$

Use linear interpolation to find values for $\rho = 1.68\%$

$$\frac{x - 3.05}{1.68 - 1} = \frac{4.6 - 3.05}{2 - 1} \rightarrow x = 4.104$$

$$\frac{y - 5.0325}{1.68 - 1} = \frac{7.59 - 5.0325}{2 - 1} \rightarrow y = 6.7716$$

Since $\gamma = 0.75$ is the midpoint of 0.7 and 0.8 take the average of the points found for $\rho = 1.68\%$

$$x_{avg} = \frac{3.7792 + 4.104}{2} = 3.94 = \frac{M_r}{A_g h}$$

$$y_{avg} = \frac{6.235 + 6.7716}{2} = 6.5 = P_r / A_g$$

$$\therefore M_r = 3.94(178500mm^2)(510mm) \div 1000^2 = 358.6kNm$$

$$P_r = 6.5(178500mm^2) \div 1000 = 1160.2kN$$

****

Actual values computed using Approach #1

$$M_r = 370kNm, P_r = 1196kN$$

Table 7.11.7 Rectangular Columns with Bars on End Faces Only

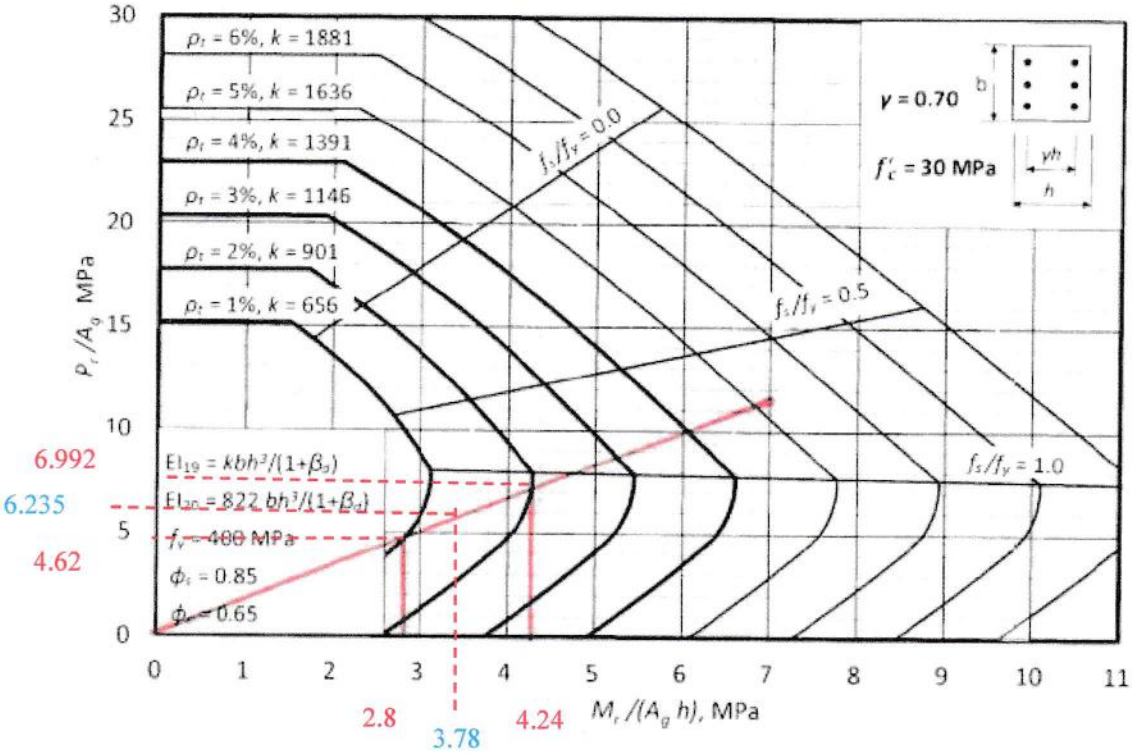

Table 7.11.8 Rectangular Columns with Bars on End Faces Only

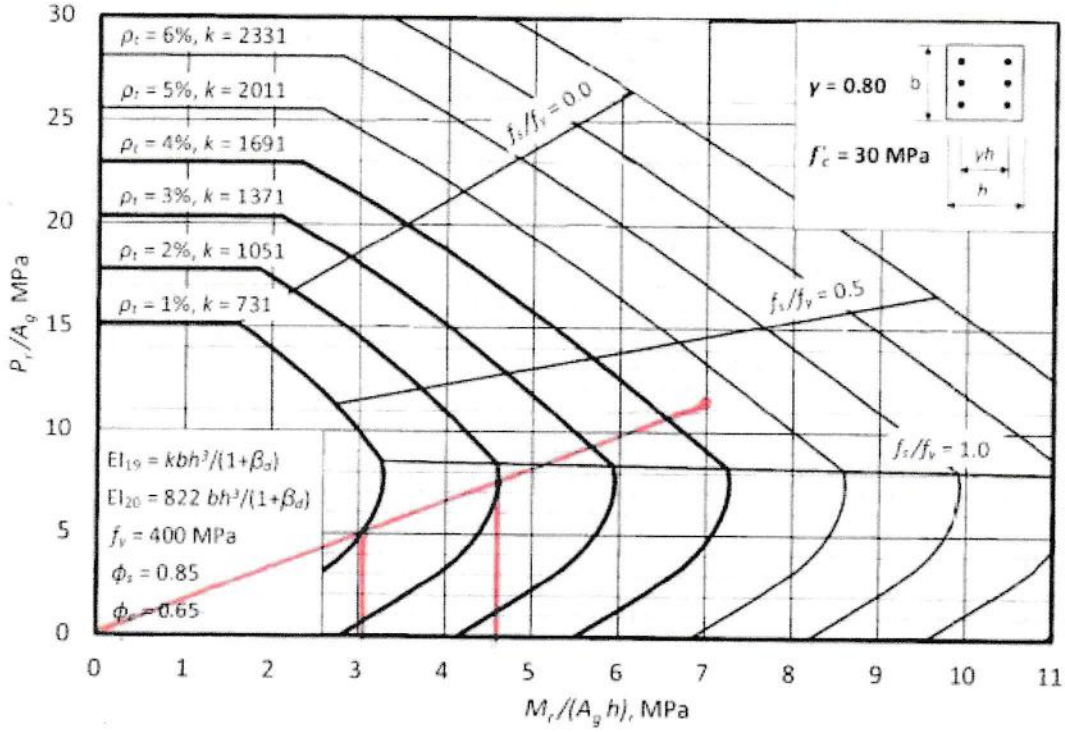

Example 4 ***Design a column subject to the following factored loads***

P (kN), M(kNm)

	Dead	Live	Wind
P	750	600	-
M	25	20	85

$f_c' = 35\ MP_a$

Solution

1. Calculate factored load effects (see annex C , Table C.11)

$$\text{LC\# 1: } P_f = 1.4 \cdot 750 = 1050kN$$

$$M_f = 1.4 \cdot 25 = 35\ kNM$$

$$\text{LC\# 2: } P_f = 1.25 \cdot 750 + 1.5 \cdot 600 = 1837.5kN$$

$$M_f = 1.25 \cdot 25 + 1.5 \cdot 20 + 0.4 \cdot 85 = 95.25\ kNm$$

$$LC\#4 : P_f = 1.25 \cdot 750 + 0.5 \cdot 600 = 1237.5kN$$

$$M_f = 1.25 \cdot 25 + 1.4 \cdot 85 + 0.5 \cdot 20 = 160.25kNm$$

---

2. Trial Section

$$given \quad or \quad A_g(trial) = \frac{P_f}{0.35 \cdot f_c' + \rho_t \cdot f_y}$$

$$\uparrow pick\ something\ large$$

3. Calculate

$$\frac{P_f}{A_g}, \frac{M_f}{A_g \cdot h}$$

$$A_g = 350^2 = 122500\ mm^2$$

$$h = 350mm$$

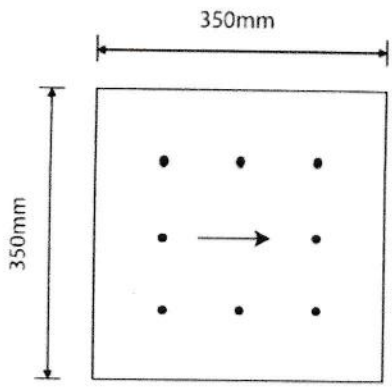

$LC\#$	$\frac{P_f}{A_g}$	$\frac{M_f}{A_g \cdot h}$
1	8.6	0.82
2	15.0	2.2
4	10.1	3.74

4. Estimate γ

Try 30M bars, 10M ties, 40mm cover

$$\gamma = \frac{350-(40+40+11.3+11.3+29.9)}{350} = 0.62 \qquad \textit{(use 0.6)}$$

$$\rho_t = 0.03$$

$$(see\ interaction\ diagram\ \ take\ the\ largest\ from\ load\ combinations)$$

$$\rightarrow A_{st} = 0.03 \cdot 122500 = 3675mm^2$$

$$8 - 25M\ bars\ \rightarrow A_s = 4000mm^2 > 3675\ mm^2\ \checkmark$$

recalculate w/ 25M bars to be sure

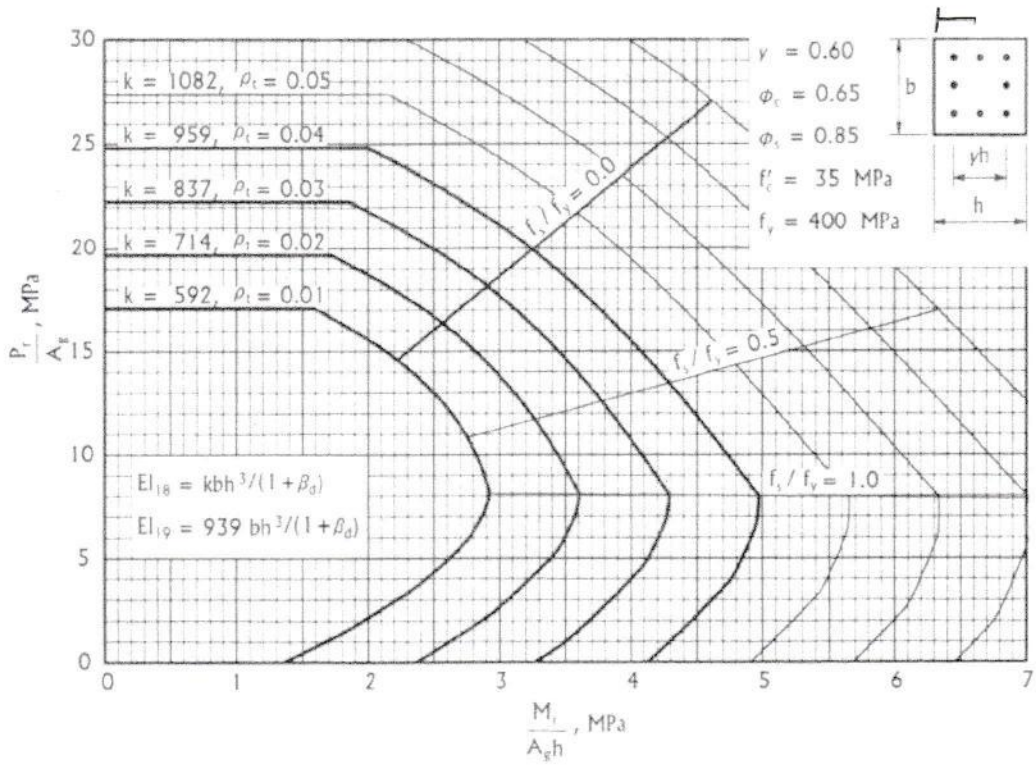
k = 1082, ρt = 0.05
k = 959, ρt = 0.04
k = 837, ρt = 0.03
k = 714, ρt = 0.02
k = 592, ρt = 0.01
γ = 0.60
φc = 0.65
φs = 0.85
f'c = 35 MPa
fy = 400 MPa
b
γh
h
fs / fy = 0.0
fs / fy = 0.5
fs / fy = 1.0
EI18 = kbh³/(1 + βd)
EI19 = 939 bh³/(1 + βd)
Pr / Ag, MPa
Mr / Agh, MPa
0
5
10
15
20
25
30
0
1
2
3
4
5
6
7

Column Reinforcement Detailing

The following requirements should be followed when selecting longitudinal column reinforcement *[CSA A23.3 §10.9]*:

- A minimum amount of longitudinal reinforcement of $A_{st} \geq 0.01 \cdot A_g$ (or $\rho_t \geq 0.01$) is normally called for to limit the effects of creep *[CSA A23.3 §10.9.1]*.

1%

Continuous 0.5%

- In the current code, $0.005 \cdot A_g \leq A_{st} < 0.01 \cdot A_g$ may be used, but the column capacity must be limited in this case as follows: $P_r = P_r \cdot 0.5 \cdot (1 + \rho_t / 0.01)$ *[CSA A23.3 §10.10.5]*.

- A maximum amount of longitudinal reinforcement of $A_{st} \leq 0.08 \cdot A_g$ (or $\rho_t \leq 0.08$) is specified *[CSA A23.3 §10.9.2]* for practical reasons. However, even this is a lot of reinforcement. It is therefore recommended that $A_{st} \leq 0.04 \cdot A_g$, so that the longitudinal bars can be easily placed, lap splices can be accommodated, and the concrete will flow easily when it is poured.

8%

4%

try to do less than 4

- Normally, a minimum of four (4) longitudinal bars are required. (exceptions: minimum three (3) long. bars for triangular columns, minimum six (6) long. bars for spiral tied columns).

- The main purpose of the column ties is to provide lateral support for the longitudinal reinforcement. They also provide a small amount of confinement (much more in spiral columns).

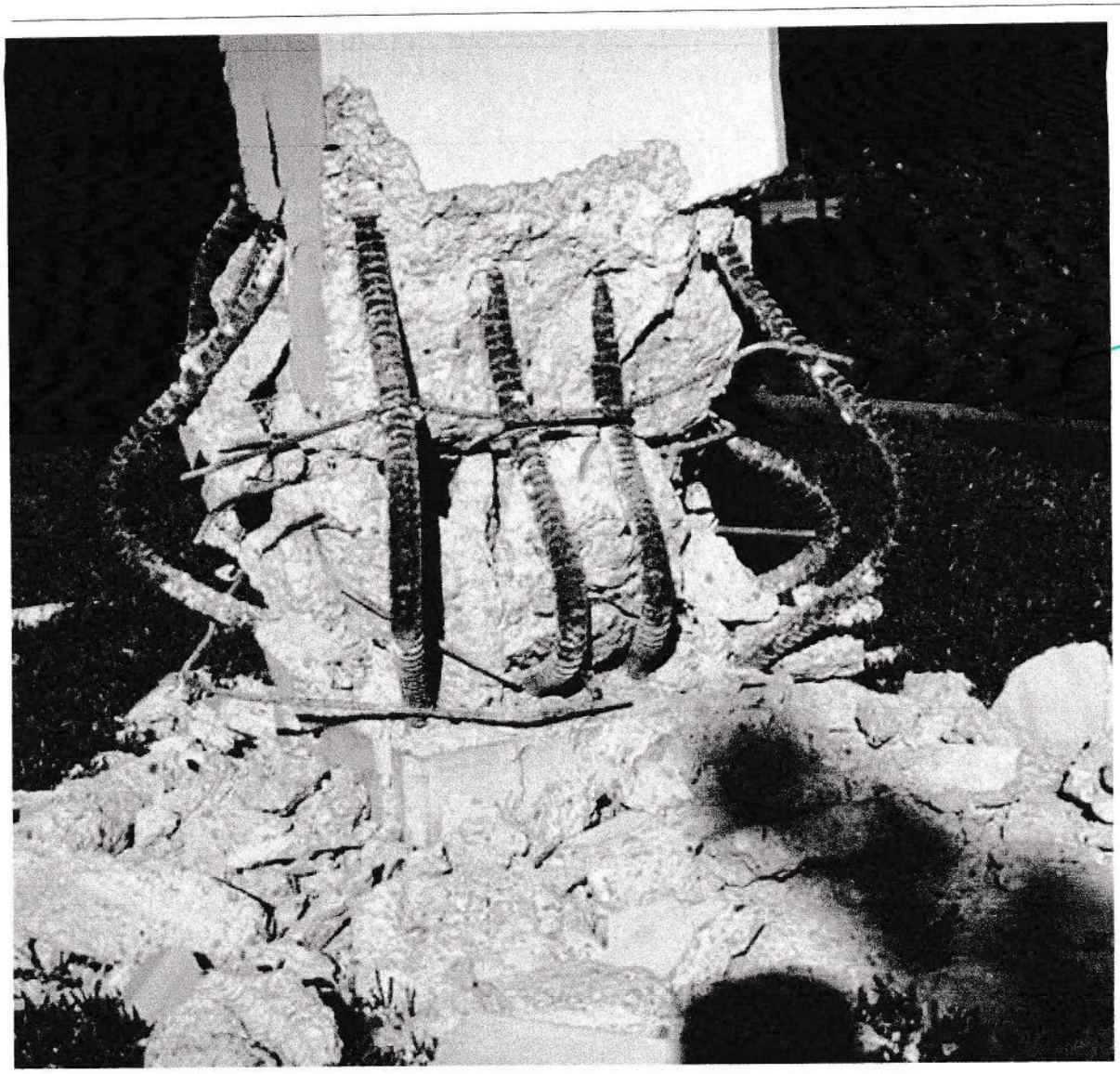

No proper confinement

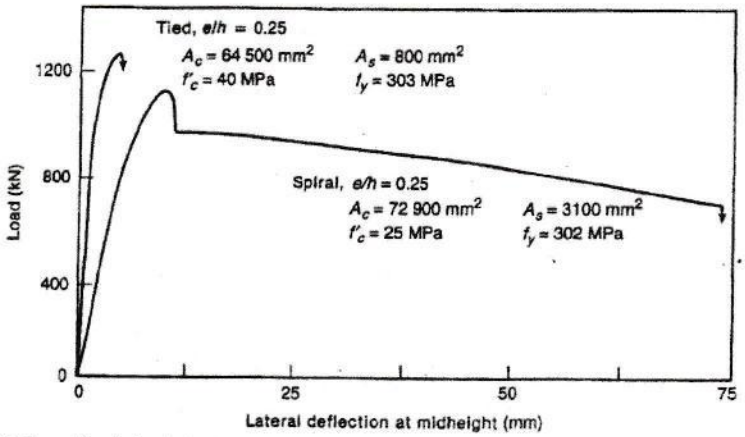

(b) Eccentrically loaded columns.

The following requirements apply to the selection of the column ties *[CSA A23.3 §7.6.5]*:

- Tie spacing shall not exceed:

- 16 · (diameter of smallest longitudinal bar)
- 48 · (tie diameter)
- the smallest column x-section dimension
- 300 mm, in the case of columns with "bundled" bars

➢ For rectangular columns, each corner and alternating longitudinal bar around the perimeter shall be laterally restrained by a tie corner (max. angle: 135°). No longitudinal bar can be more than 150 mm away on either side from a laterally restrained neighbouring bar.

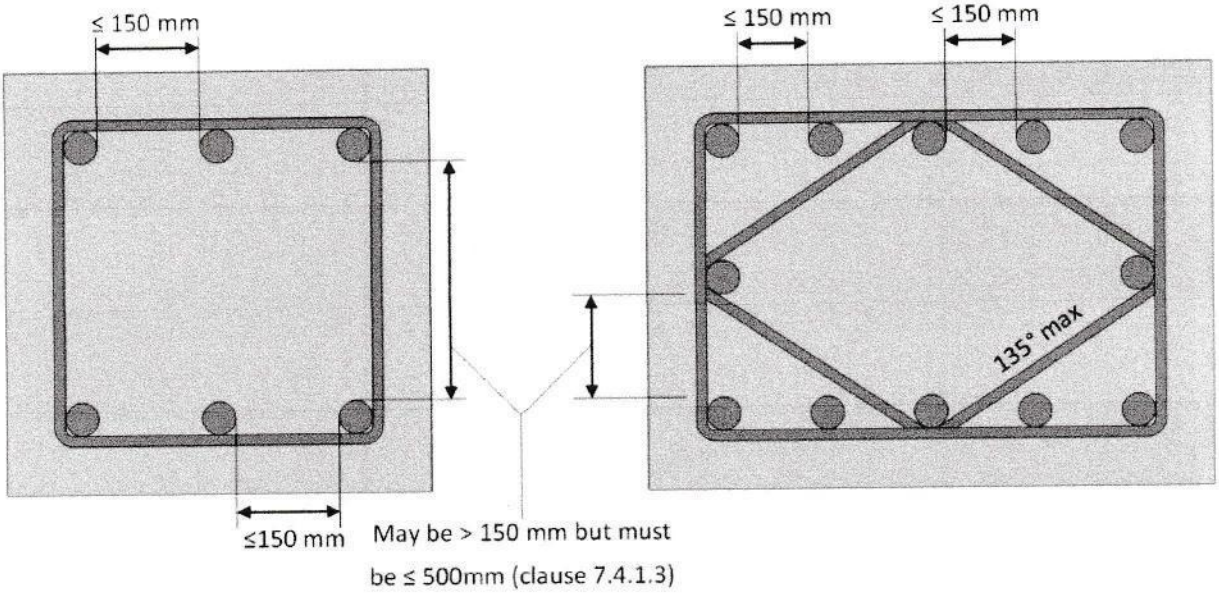

Fig. N7.6.5.5 Requirements for Lateral Support of Column Bars

Max. longitudinal bar spacing is 500 mm [*CSA A23.3 §7.4.1.3*].

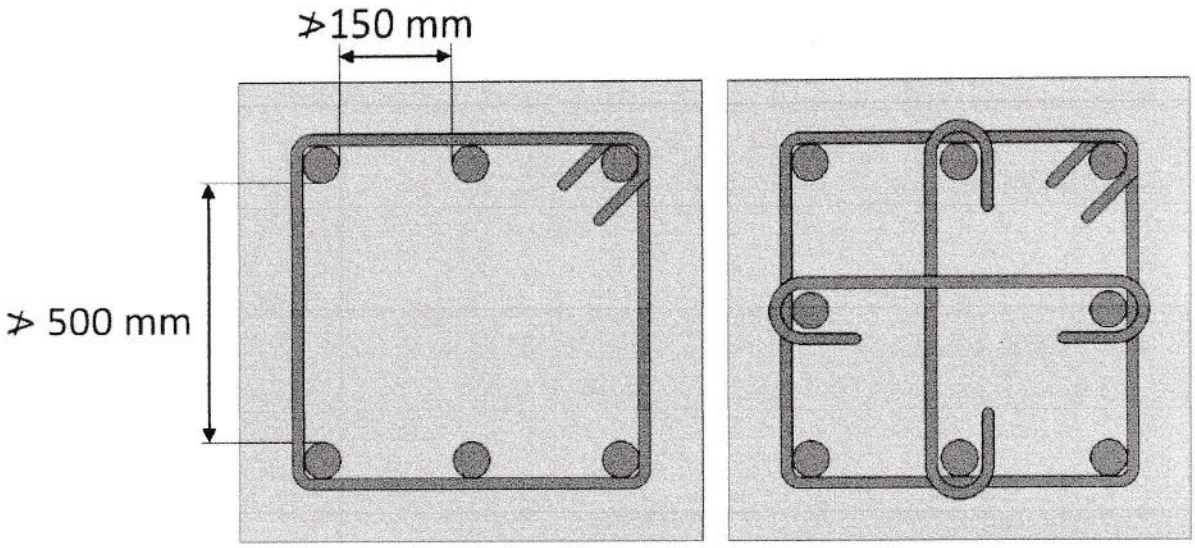

See [*CSA A23.3 §7.5.1*] for tie requirements near offset bars.

Example 4 continued…

5. Tie details

Use 10M ties (ok up to 55M long. bar Cl. 7.6.5.1)

- tie spacing: MIN of:

25M

$16 \cdot 25.2 = 403$ or

$48 \cdot 11.3 = 542$ or

$350 \leftarrow governs$

- tie configuration: See Fig. N7.6.5.5

$$x = (350 - (40 \cdot 2 + 11.3 \cdot 2 + 25.2)/\,2\ - 25.2$$

$$= 85.9mm < 150mm$$ ← Requirement

$$\rightarrow single\ tie\ ok!$$

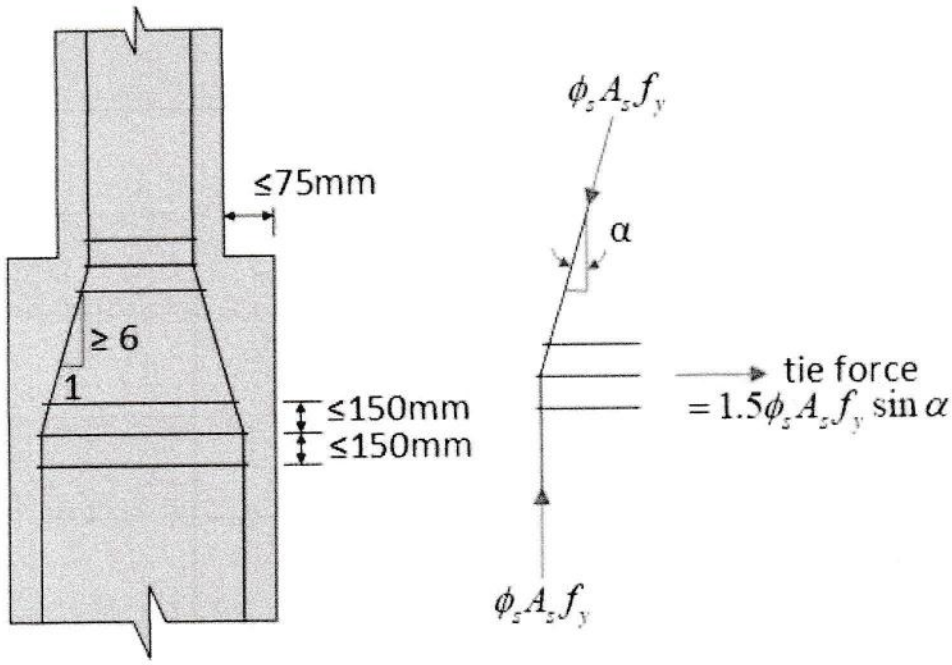

Fig. N7.5.1 Tie Requirement Near Offset Bars

Biaxial Bending

Biaxial bending is when moments are present about both axes, i.e.:

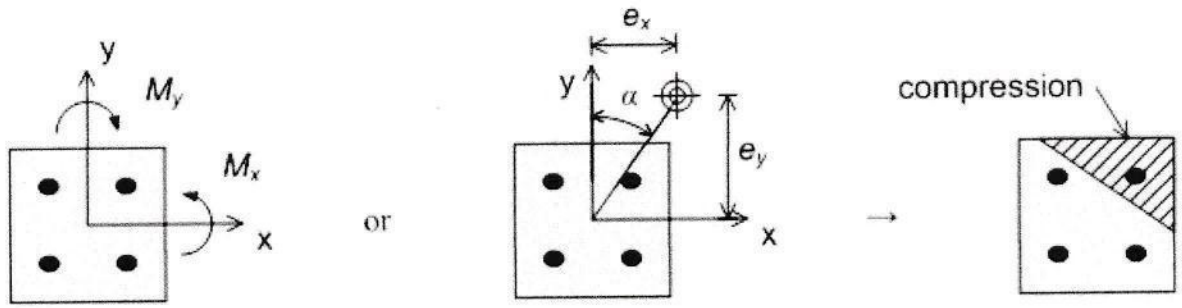

- Analysis of the resulting x-section can be rather involved, but if it were carried out (by assuming different strain distributions, as before), a 3D interaction diagram would result:

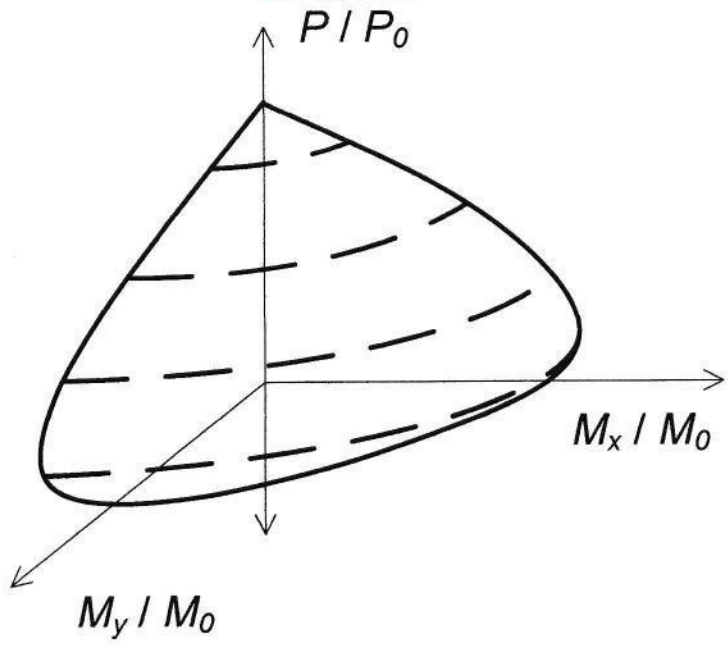

We approximate this diagram in design by considering the bending moments in the x and y directions separately, using the "Bresler" or "reciprocal load" method, i.e.:

$$\frac{1}{P_r} = \frac{1}{P_{rx}} + \frac{1}{P_{ry}} - \frac{1}{P_{r0}}$$

where: P_{rx} is the factored load resistance if the load is applied at the eccentricity e_x with $e_y = 0$

P_{ry} is the factored load resistance if the load is applied at the eccentricity e_y with $e_x = 0$

P_{r0} is the factored load resistance if $e_y = e_x = 0$

If $P_r \geq P_f$, then the column is adequate.

Bresler, Boris, „Design Criteria for Reinforced Columns under Axial Loads and Biaxial Bending" ACI Journal, Proceedings V, 57, No. 11, Nov 1960, pp. 481-490

Example 5 Verify column design in Example 4, assuming $M_y = M_x$ for LC#2

$LC\#$	$\frac{P_f}{A_g}$	$\frac{M_f}{A_g \cdot h}$
2	15.0	2.2

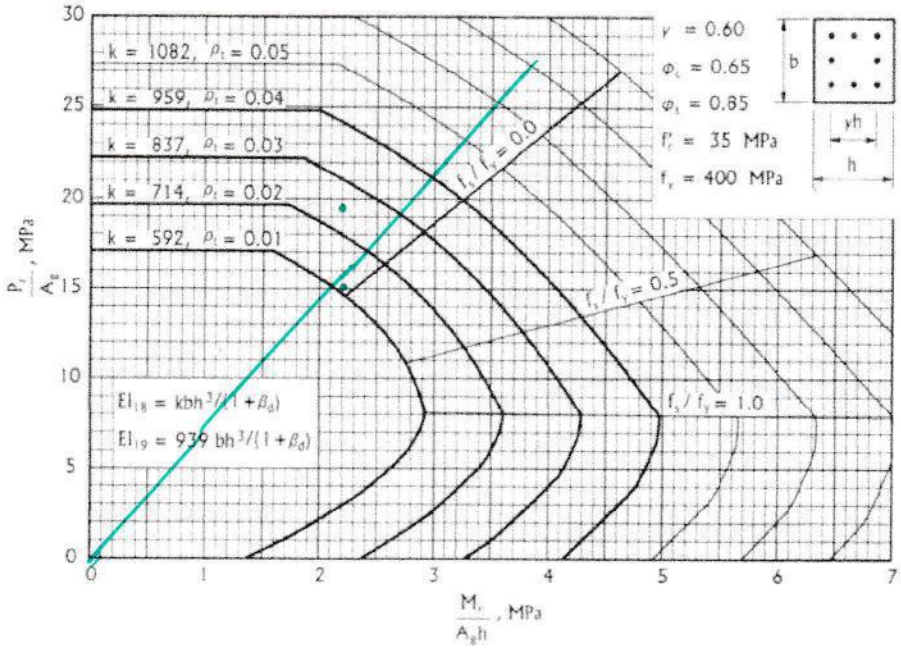
k = 1082, ρt = 0.05
k = 959, ρt = 0.04
k = 837, ρt = 0.03
k = 714, ρt = 0.02
k = 592, ρt = 0.01
γ = 0.60
φc = 0.65
φs = 0.85
f'c = 35 MPa
fy = 400 MPa
b
γh
h
fs / fy = 0.0
fs / fy = 0.5
fs / fy = 1.0
EIeff = kbh³/(1 + βd)
EIg = 939 bh³/(1 + βd)
Pr / Ag , MPa
Mr / Agh , MPa
0
5
10
15
20
25
30
0
1
2
3
4
5
6
7

Solution

$$\rho_{prov} = \frac{4000}{122500} = 0.033 \text{ reinf. ratio}$$

$$\frac{P_{rx}}{A_g} = 19.5 = \frac{P_{ry}}{A_g}$$

$$\frac{P_{ro}}{A_g} = \frac{P_{rmax}}{A_g 0.8} = 23 \cdot 1.25 = 28.75$$

$$P_{rx} = 19.5 \cdot 122500 = 2389\ kN$$

$$P_{ro} = 28.75 \cdot 122500 = 3522\ kN$$

$$\frac{1}{P_r} = \frac{1}{2389} + \frac{1}{2389} - \frac{1}{3522}$$

$$\rightarrow P_r = 1807kN < 1837.5kN \ \rightarrow Not\ Good *$$

*might be able to make column work by recalculating $\gamma\ with\ 20\ M\ bars$

*1.6% underdesign

Non-Rectangular and Non-Symmetrical Columns

Interaction diagrams can be produced in the same way as for rectangular columns. However, calculation of resultant force in concrete compression block is more complicated.

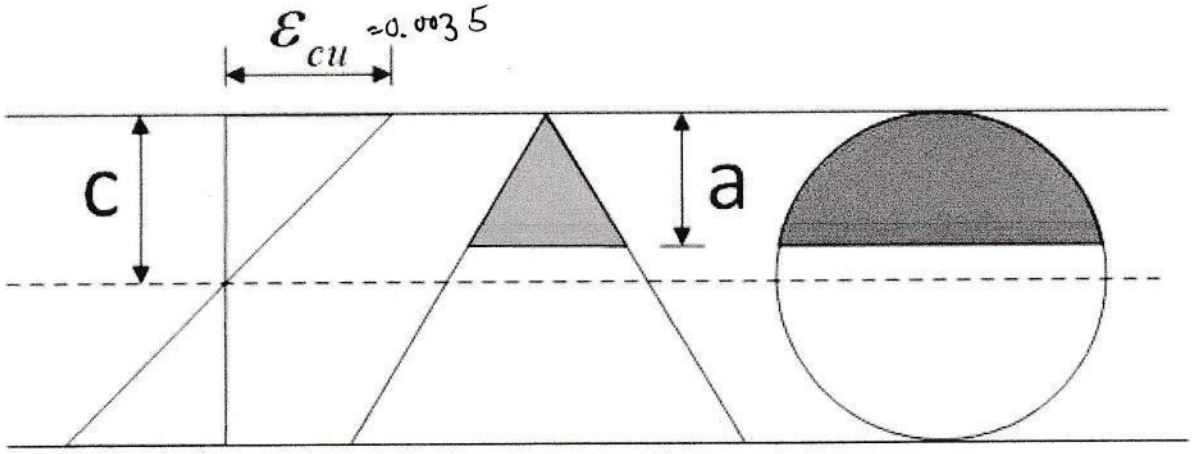

Compression block not rectangular
→ software available

When column short, assume same moment through whole section
When column slender account for $P\Delta$.

SLENDER COLUMNS

- Slender columns are columns with capacities that are significantly reduced due to second order effects.

- Second order effects can be explained using the following example of a column with an axial load, *P*, applied at both ends with an eccentricity, *e*:

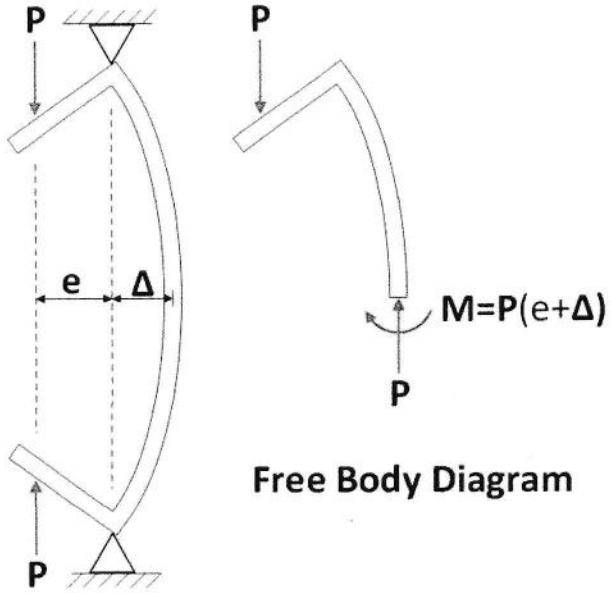

- The first order moment is uniform along the column length, and can be calculated as: $\boldsymbol{M = P \cdot e}$.
- As *P* increases, the column will deflect at the mid-height by an amount, Δ.
- The second order moment at the mid-height is calculated based on the geometry of the deformed structure. The resulting moment, $\boldsymbol{M = P \cdot (e + \Delta)}$, is typically larger than the first order moment.

- The deflection, Δ, increases the moment for which the column must be designed. This will decrease the axial load capacity of the column. When the so-called "second order effects" are significant (~5%), the column is defined as a slender column, and must be designed as such.
- In practice, 90% of columns are short.
- The question is: how do we design the other 10%?
- According to *[CSA A23.3 §10.15.2]*, columns that **<u>are laterally supported at the top and bottom</u>** are short columns if:

CSA short

$$\frac{k \cdot \ell_u}{r} \leq \frac{25 - 10 \cdot \dfrac{M_1}{M_2}}{\sqrt{P_f / \left(f'_c \cdot A_g\right)}} \text{ with } \frac{M_1}{M_2} \geq -0.5 \text{ where:}$$

M_1 = absolute minimum end moment

M_2 = absolute maximum end moment

Note: $\dfrac{M_1}{M_2}$ is positive (+) for single curvature,

$\dfrac{M_1}{M_2}$ is negative (–) for double curvature.

$r = \sqrt{\dfrac{I}{A}}$ is the "radius of gyration"

$r \cong 0.3 \cdot h \rightarrow$ rectangular columns

$r \cong 0.25 \cdot d \rightarrow$ circular columns

l_u = *unsupported length of the column*

note: taking k= 1 is conservative first trial

Buckling of Columns

When a column is pushed laterally at mid-height and then released and does not return to its original, undeformed shape, bifurcation or "buckling" is said to have occurred

Pin-ended column

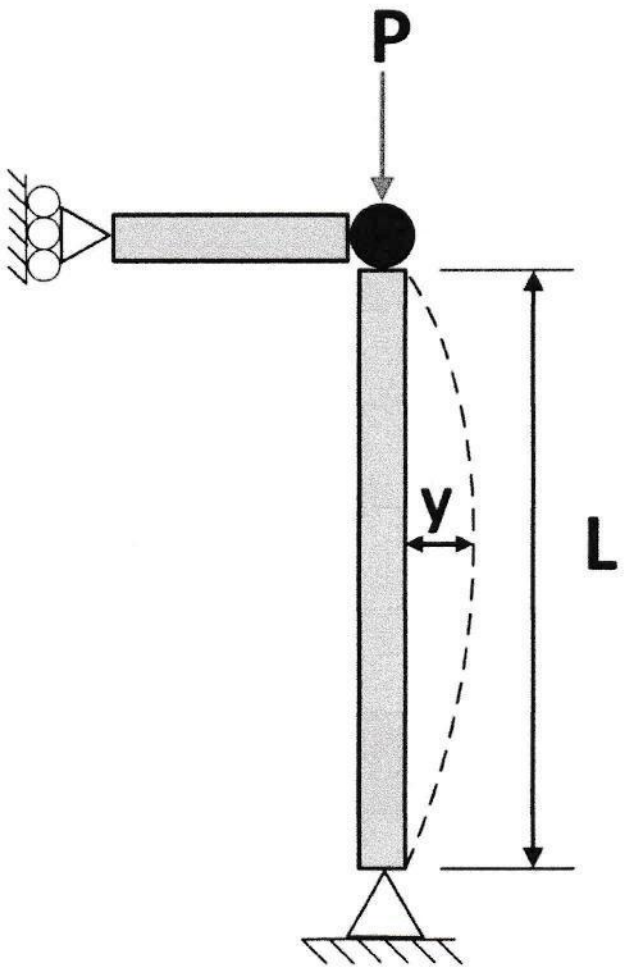

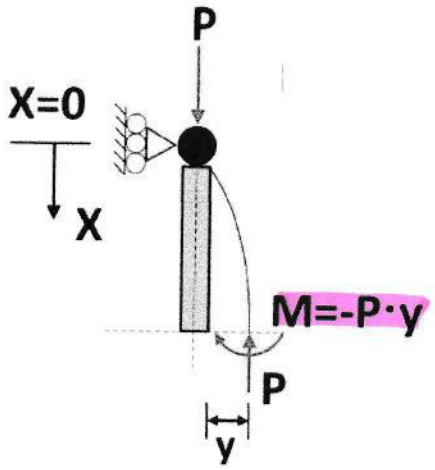

$$M = EI\,\frac{d^2y}{dx^2}$$

- Cutting the column and summing the moments for the resulting free body leads to the following expression:

$$E \cdot I \cdot \frac{d^2y}{dx^2} = -P \cdot y$$

- Euler's solution for the buckling load, P_c:

$$P_c = \frac{n^2 \cdot \pi^2 \cdot E \cdot I}{\ell^2} \text{ (for pin-ended columns)}$$

where n is the number of half-sine waves within the column length:

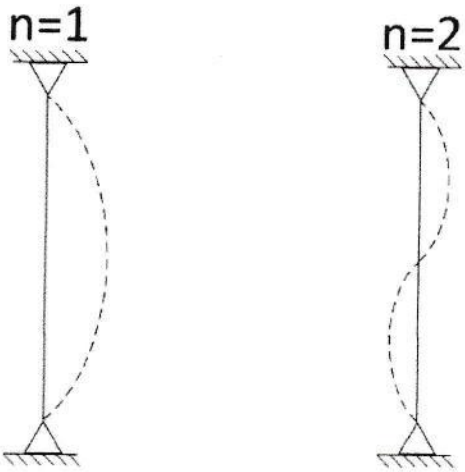

EI = stiffness (accounts material non-linearity)

for n = 1, the Euler buckling load is $P_e = \dfrac{\pi^2 \cdot E \cdot I}{\ell^2}$ ← pin-ended column

Effective Length Concept

- True pin-ended columns are rare in real construction. Columns in frames can be idealized as pin-ended columns, however, through the effective length concept. For the various possible end support conditions, the Euler buckling load is calculated as:

$$P_c = \frac{\pi^2 \cdot E \cdot I}{(k \cdot \ell)^2} \quad \text{where:}$$

$k \cdot \ell$ is the so-called "effective length", and

k is the "effective length factor", $k = \frac{1}{n}$.

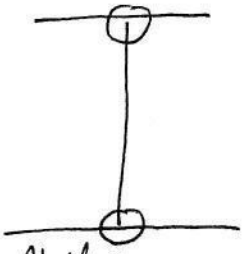

number of half sine waves within the column length

Examples:

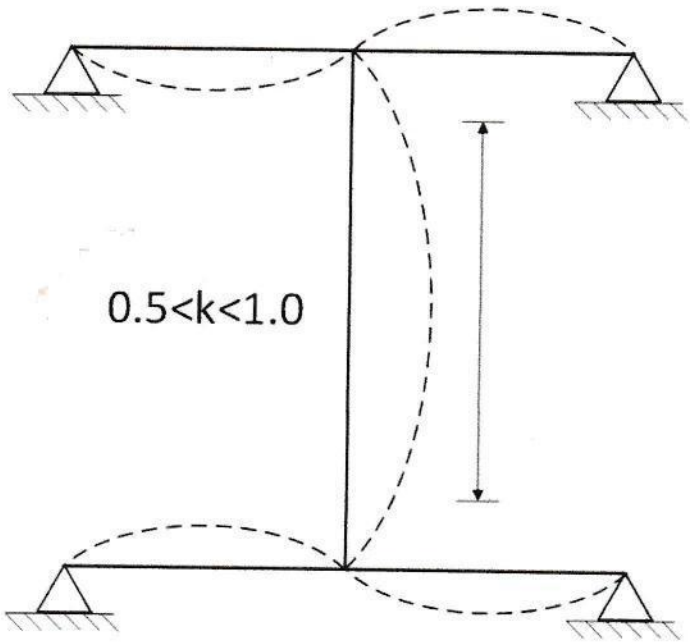

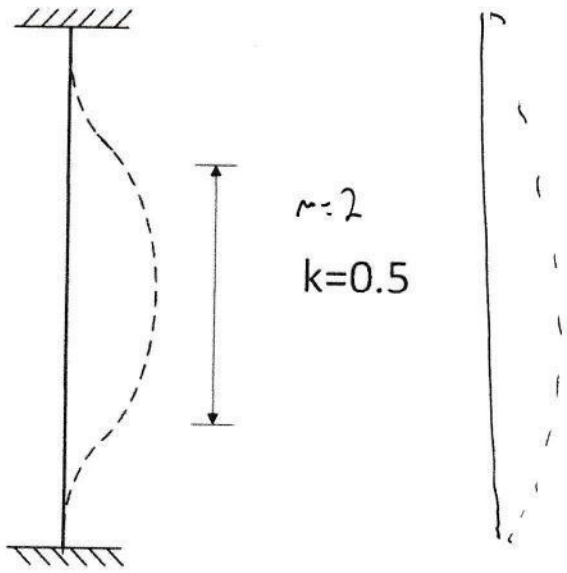

		k			
TOP	Hinged	0.81	0.91	0.95	1.00
	Elastic $\Psi = 3.1$	0.77	0.86	0.90	0.95
	Elastic $\Psi = 1.6$	0.74	0.83	0.86	0.91
	Fixed	0.67	0.74	0.77	0.81
		Fixed	Elastic	Elastic	Hinged
		BOTTOM			

Effective length factors *[CAC Handbook Table 8.5]*:

Note: see first
1. Create interaction diagrams of cross-sections
2. Design using interaction diagrams from code
3. Short columns and long columns

or braced:

$\frac{k l_u}{r} = \frac{35 - 10\, M_1/M_2}{\sqrt{\frac{P_f}{f'_c A_g}}}$, $M_1/M_2 \geq -0.5$

· k is effective length factor
↳ If k=1 and short, ok

↳ A lot always braced

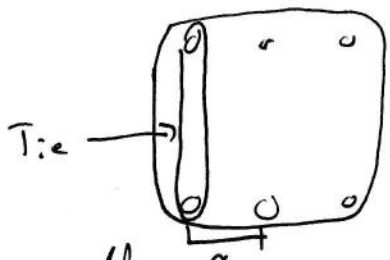

If $x > 150$, tie req'd

Note: buckling never desirable. Failure by crushing ok

· $P_c = \frac{n^2 \pi^2 EI}{l_e^2}$ (Euler buckling load), n depends on buckling mode. Usually

Material vs. Stability Failures

- The increase in moment due to second order effects can be considered by superimposing the P-M curve on the interaction diagram.
- For a short column, the slope of the curve is constant and can be related to the eccentricity of the load application.

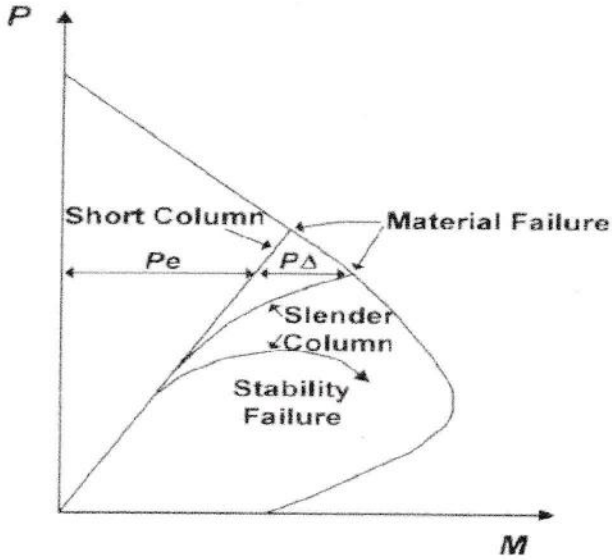

[CAC Handbook 2014]

- As the column becomes more and more slender, the axial force vs. moment curve becomes increasingly nonlinear. Depending on the slenderness, material or stability failures may result:
- If the axial force – moment curve intercepts the interaction diagram at the peak axial load level, a material failure occurs.
- If the peak axial load occurs prior to this, then a stability failure is said to have occurred.
- Material failures can be expected for most practical cases.

There are three ways to consider second order effects in design:

1. Second order analysis: this means carrying out a stepwise analysis of the column that considers the change in column geometry (i.e. out-of-plane displacement) for each step.

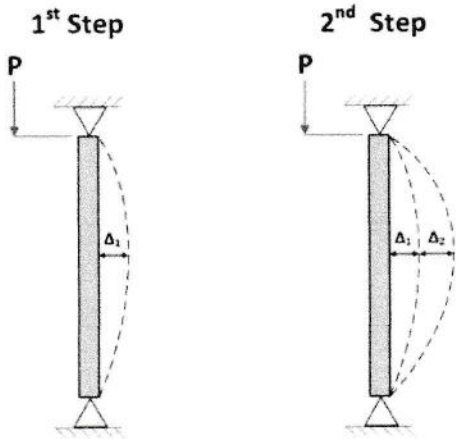

2. Through the use of slender column interaction diagrams, i.e.:

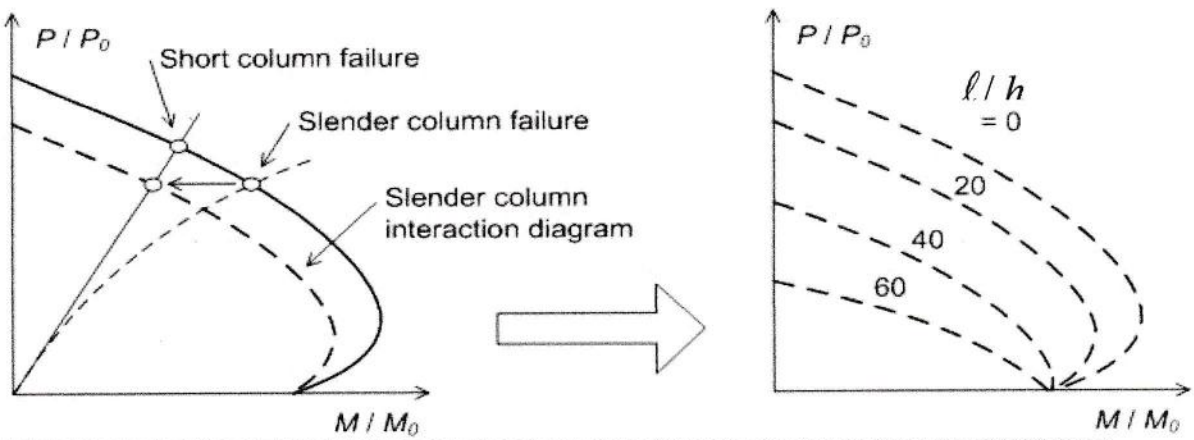

3. Through the use of a **moment magnification factor.**

Moment Magnifier Concept

- Recall that the moment in an eccentrically loaded, pin-ended column considering second order effects (we'll now call this M_c) can be calculated as follows: $M_c = P \cdot (e + \Delta)$.

- Alternatively, we can write: $M_c = M_0 + P \cdot \Delta$ where M_0 is the first order moment, or $M_c = \delta \cdot M_0$.

- $\boldsymbol{\delta}$ is a correction factor, which increases M_0 to account for second order effects. It is a **moment magnifier**.

- Consider the following column subjected to first order end moments, M_0, and an axial force, P.

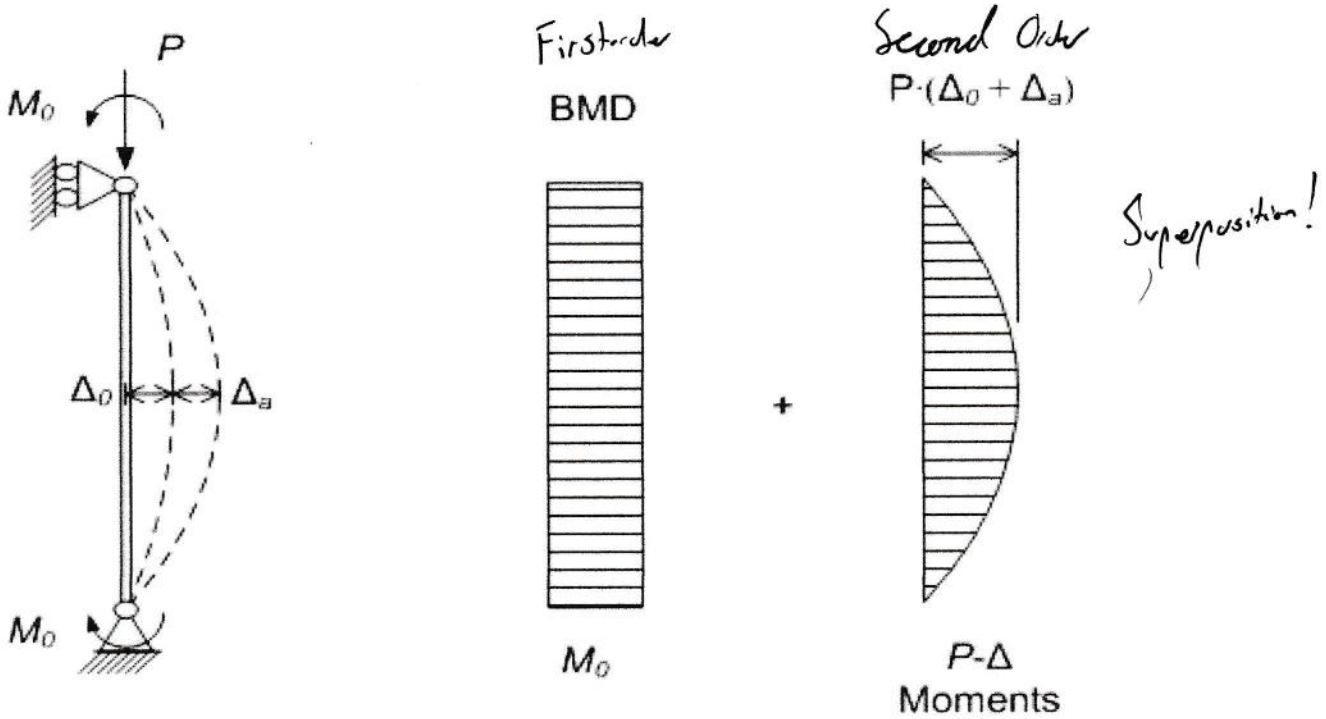

$\Delta_0 = first\ order\ deflection$

$\Delta_a = second\ order\ deflection$

Using the moment-area method we can calculate Δ:

Recall: $\Delta = \frac{A \cdot x}{E \cdot I}$

Where: A - area under the bending moment diagram

X - distance to the centroid of bending moment diagram, from support

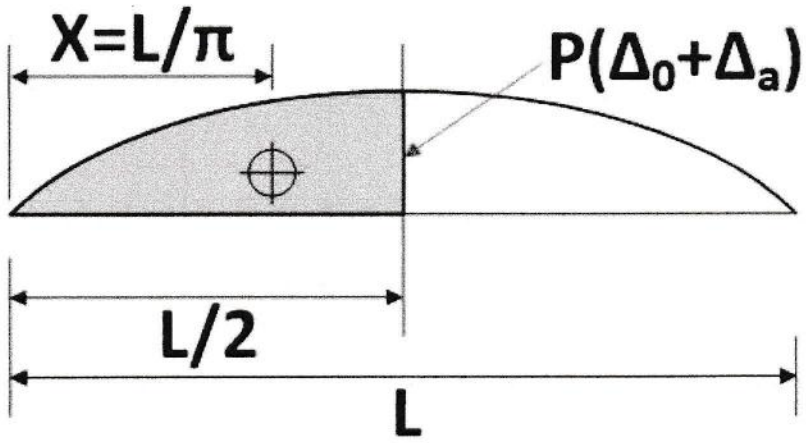

$$A = P(\Delta_0 + \Delta_a)\frac{L}{2}\cdot\frac{2}{\pi}$$

$$\Delta_a = \left(\frac{P}{EI}\cdot(\Delta_0 + \Delta_a)\frac{\ell}{2}\cdot\frac{2}{\pi}\right)\cdot\frac{\ell}{\pi}$$

$$\Delta_a = \frac{P\cdot\ell^2}{\pi^2\cdot E\cdot I}\cdot(\Delta_0 + \Delta_a) \;\rightarrow\; \frac{P}{P_e}\cdot(\Delta_0 + \Delta_a)$$

Rearranging $\rightarrow$ $\Delta_a = \Delta_0 \cdot \left(\frac{P/P_e}{1 - P/P_e}\right)$

Total deflection, $\Delta = \Delta_0 + \Delta_a = \Delta_0 \cdot \left(\frac{1}{1 - P/P_e}\right)$

Therefore: $M_c = M_0 + P \cdot \Delta_0 \cdot \left(\dfrac{1}{1 - P/P_e} \right)$

Again, using the moment-area method we can calculate Δ_0:

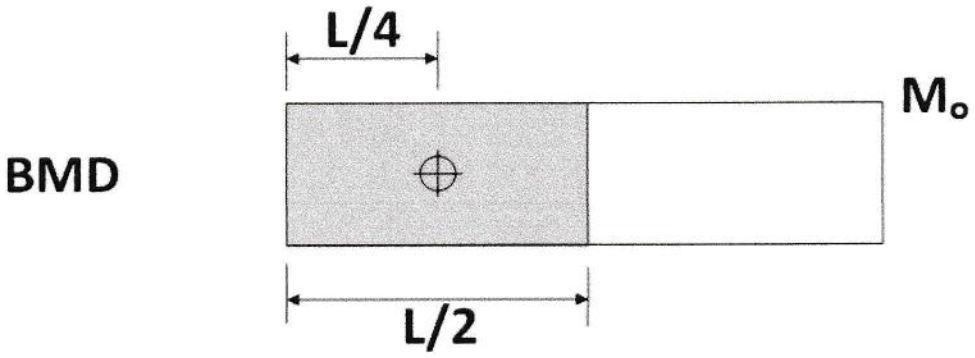

A=M₀ L/2

$$\Delta_0 = \frac{M_0 \cdot \ell^2}{8 \cdot E \cdot I}$$

2 reasons for nonlinearity:
1. Material nonlinearity
2. Geometric nonlinearity
· Deflections impact

first order moment

$$\rightarrow \quad M_c = M_0 \cdot \left(\frac{1 + 0.23 \cdot P/P_e}{1 - P/P_e} \right) \approx M_0 \cdot \left(\frac{1}{1 - P/P_c} \right)$$

(code approximation *[CSA A23.3]*) → $\boxed{\delta = \left(\dfrac{1}{1 - P/P_c} \right)}$

Moment magnifier factor

Unequal End Moments – Pin-Ended Columns

For column with unequal end moments, the maximum M_0 and P-Δ moments do not occur at the same cross-section. To design columns in this case, the real column is replaced by a similar column subjected to equal end moments $C_m \cdot M_2$. These end moments are chosen so that the maximum magnified moment is the same in both (the real and the "effective") columns.

$$C_m = 0.6 + 0.4 \cdot \frac{M_1}{M_2} \geq 0.4 \qquad \textit{[CSA A23.3 §10.15.3.2]}$$

where: M_1 and M_2 are the smaller and larger end moments

$\frac{M_1}{M_2}$ is positive for single, negative for double curvature

<u>Conditions</u>:

- $\frac{M_1}{M_2} \geq -0.5$ *(implied because $C_m \geq 0.4$)*
- M_2 should not be less than the moment associated with assumed minimum eccentricity, i.e.:

  $$M_2 \geq P_f(15 + 0.03 \cdot h)$$

- $C_m = 1.0$ if transverse loads are present between column ends *[CSA A23.3 §10.15.3.3]*

The resulting moment magnifier is expressed as follows:

$$\delta_b = \frac{C_m}{1 - \dfrac{P}{\phi_m \cdot P_c}}$$

where: $\phi_m = 0.75$ is a member resistance factor

The '*b*' subscript refers to "braced" columns (i.e. columns in braced or "non-sway" frames).

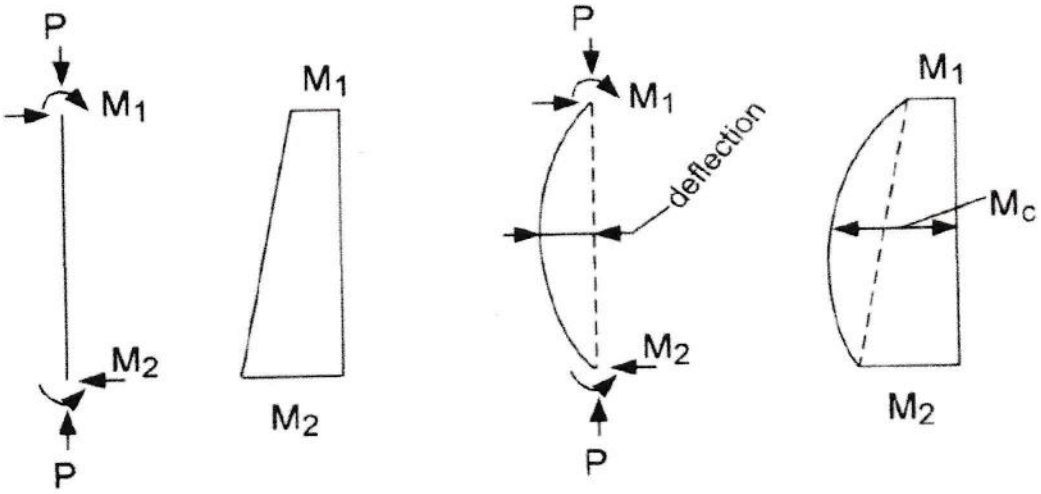

(i) 1 st Order Moments Due to Gravity Loads

(ii) Amplified Moments

(a) Members Stability Effect - Amplification of Gravity Load Moments Due to Deflections Between Member Ends

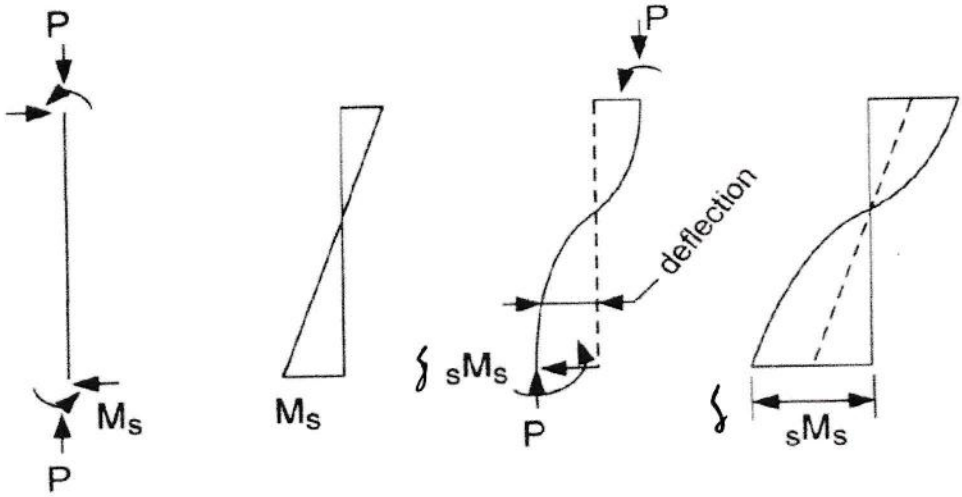

(i) 1 st Order Moments Due to Gravity Loads

(ii) Amplified Moments

(a) Lateral Drift Effect - Amplification of lateral Load Moments Due to Relative End Deflections

Column Stiffness

- The column stiffness ($E{\cdot}I$) used in the calculation of the Euler buckling load should take into account:
  - cracking (material non-linearity)
  - creep [long-term effect (material non-linearity)]
  - the true, nonlinear stress-strain relationship
- The column stiffness chosen for the analysis of the structure must approximate the $E{\cdot}I$ of the column at failure.

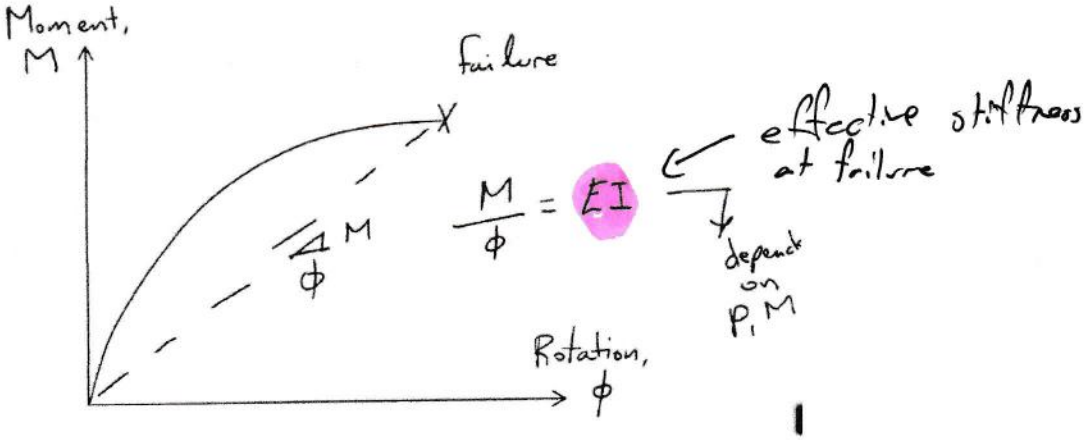

[CSA A23.3 §10.15.3.1] suggests the following empirical formulas for calculating $E{\cdot}I$ for columns under sustained loads:

$$E \cdot I = \frac{0.2 \cdot E_c \cdot I_g + E_s \cdot I_{se}}{1 + \beta_d} = EI_{eff}$$

← cracking ← creep

or

$$E \cdot I = \left(\frac{0.4}{1 + \beta_d}\right) \cdot E_c \cdot I_g = EI_{eff}$$

← cracking ← creep

I_{se} = moment of inertia of the reinforcing steel around centroidal axis of the gross cross section

I_g = gross moment of inertia of concrete x-section
β_d = effect of sustained loads

Effect of Sustained Loads

Creep increases the deflections under sustained loading, thus increasing $P{\cdot}\Delta$ effects and thereby weakening the column:

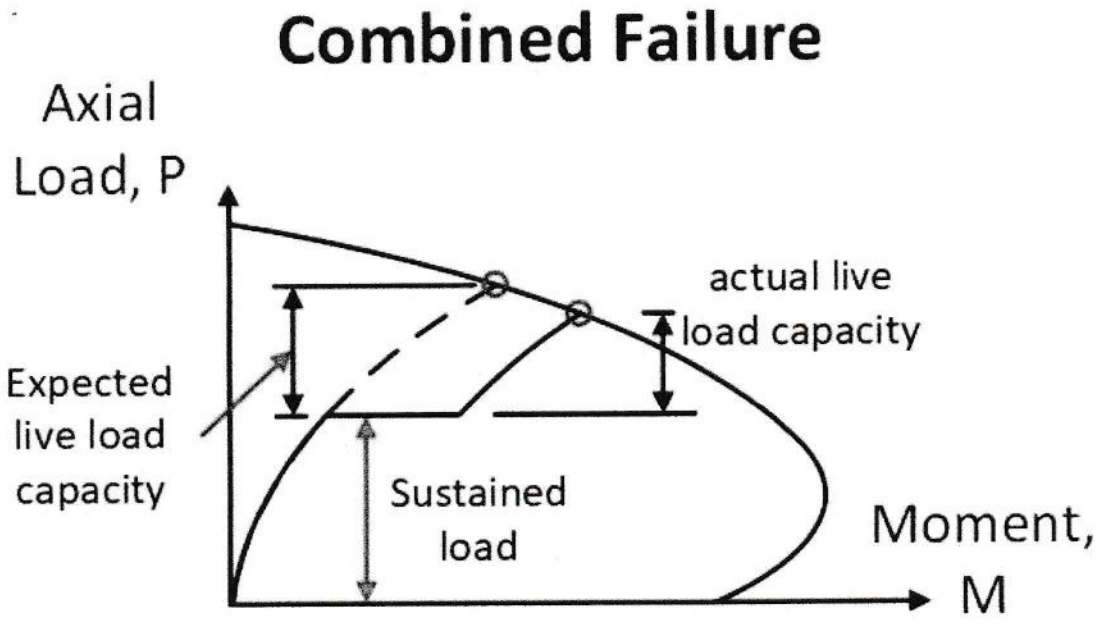

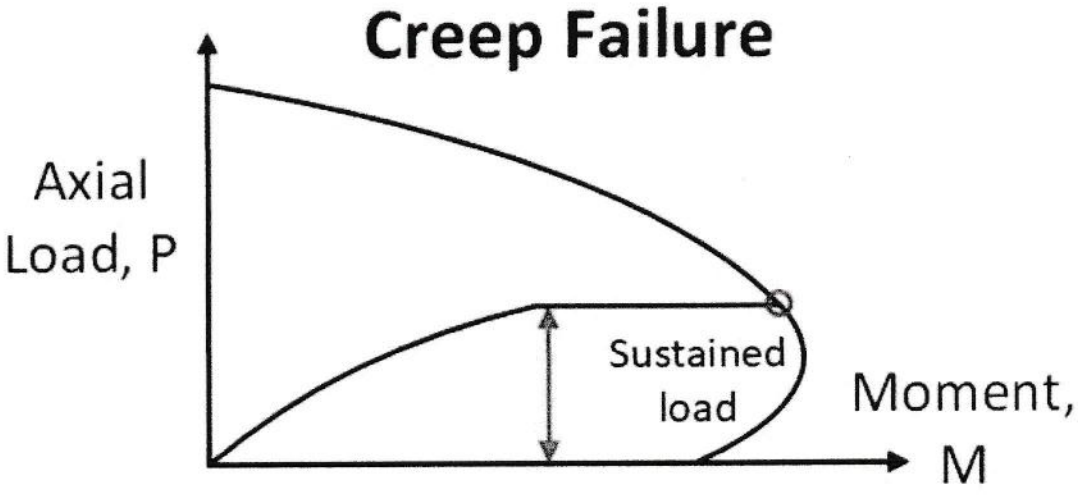

To address this concern:

- reduced modulus approach adopted by *[CSA A23.3 2004]*
- $E{\cdot}I$ is divided by $(1 + \beta_d)$ where:
  - for columns in "non-sway" or "braced" frames:

$$\beta_d = \frac{\text{factored dead vertical load}}{\text{total factored vertical load}}$$

  - for columns in "sway" or "unbraced" frames (next topic in this course):

$$\beta_d = \frac{\text{factored sustained shear}}{\text{total factored shear}}$$ ← Not wind

Example 6:

Verify column design in Example 4 assuming $l_u = 3.5m$ and moments are equal at column ends and acting in opposite directions for LC #2:

4 Steps:
1. Check slenderness
2. Determine Δ, EI, P_c
3. Find magnification
4. Design for P_f and M_c w/ interaction diagram

$LC\#$	$\frac{P_f}{A_g}$	$\frac{M_f}{A_g \cdot h}$
2	15.0	2.2

25 M long. bars

$f'_c = 35\ MPa$

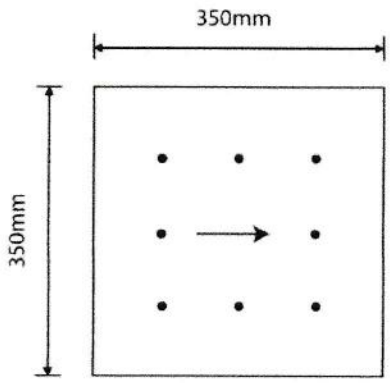

$$\text{LC\# 2: } P_f = 1.25 \cdot 750 + 1.5 \cdot 600 = 1837.5kN$$

$$M_f = 1.25 \cdot 25 + 1.5 \cdot 20 + 0.4 \cdot 85$$
$$= 95.25\ kNm$$

Solution:

1. Is column slender?

$$\frac{k \cdot l_u}{r} > \frac{25 - 10 \cdot M_1/M_2}{\sqrt{P_f/(f'_c \cdot A_g)}}$$

$$\frac{3500}{0.3 \cdot 350} = 33.3 \text{ (assuming k=1 is most conservative)}$$

← from code. 0.3 × shorter length

$$\frac{25 - 10 \cdot \left(\frac{95.25}{95.25}\right)}{\sqrt{1837.5 \cdot 1000/(35 \cdot 350^2)}} = 22.9 < 33.3$$

$$\rightarrow \textit{column is slender}$$

2. Compute EI, P_c

$$EI = \left(\frac{0.4}{1 + \beta_d}\right) E_c \cdot I_g$$

$$E_c = 4500\sqrt{35} = 26622.4\ MPA$$

$$I_g = 350^4/12 = 1.25 \cdot 10^9 mm^4$$

$$\beta_d = 1.25 \cdot 750 \,/\, 1837.5 = 0.51$$

$$\rightarrow E \cdot I = 8.81 \cdot 10^{12}\ N \cdot mm^2$$

$$P_c = \pi^2 \cdot EI \,/\, (k \cdot l_u)^2$$

$$= 7104\ kN\ (> P_f \rightarrow ok!)$$, $P_f = 1837.5$ kN

3. Compute magnified moment:

$$M_c = M_2 \cdot C_m/(1 - P_f/(\phi_m \cdot P_c))$$, $C_m = 1$ bc endmoments are the same

$$M_2 = 95.25\ kNM$$

$$C_m = 0.6 + 0.4 \cdot (M_1/M_2) \geq 0.4$$

$$= 0.6 + 0.4(1) = 1.0$$

$$M_c = 95.25 \cdot (1)/\left(1 - \frac{1837.5}{0.75 \cdot 7104}\right) = 1.53 \cdot 95.25$$

$$= 145.4\ kNm$$

4. Design column for P_f, M_c

$$P_f/A_g = 15$$

$$M_c/(A_g \cdot h) = 3.4$$
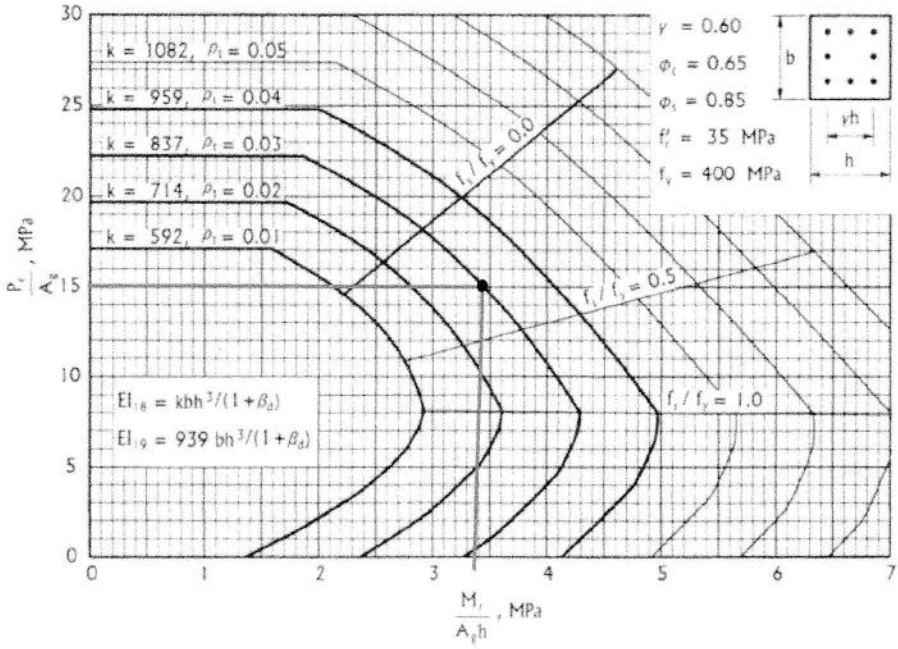
Reinforcement ratio = 3%