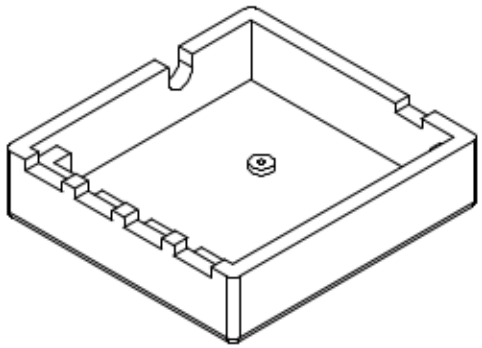

# Enclosure Base
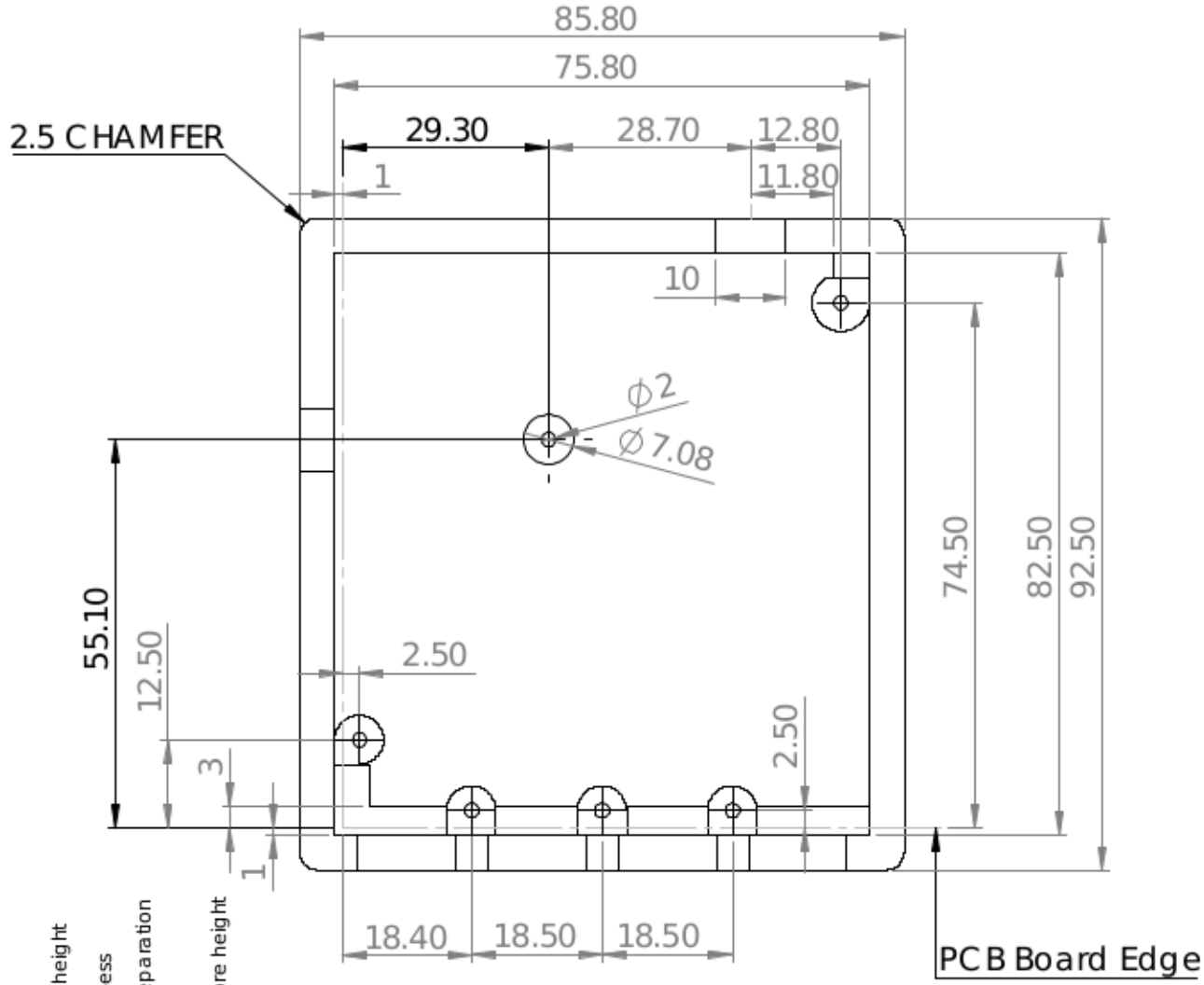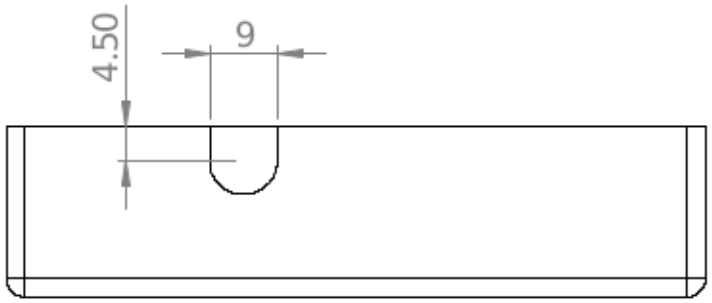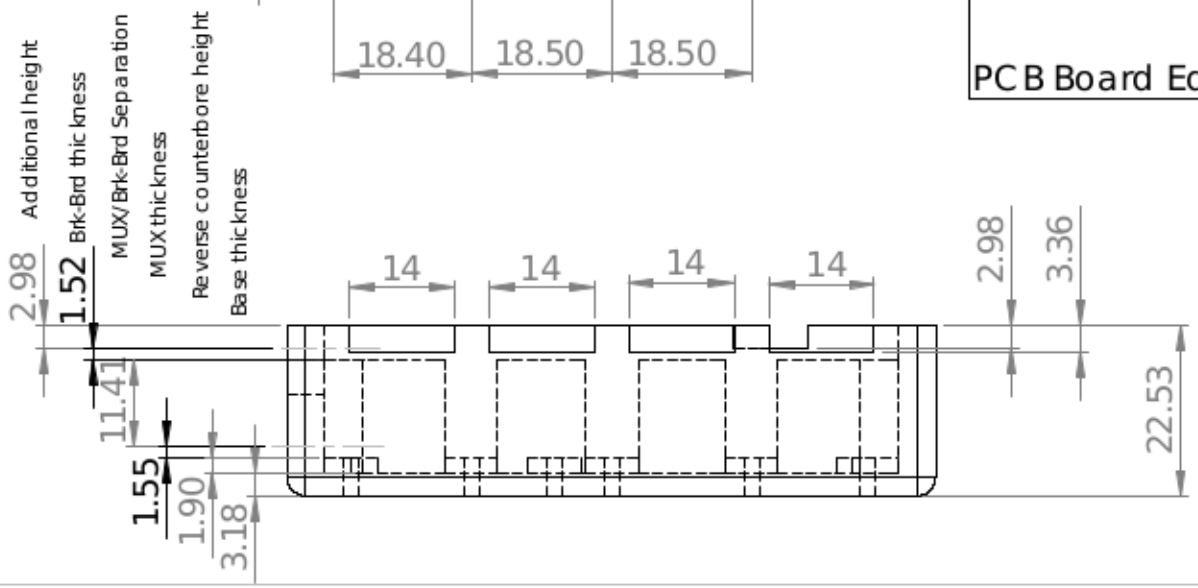
APRIL 4, 2015
ALL DIMENSIONS IN MM