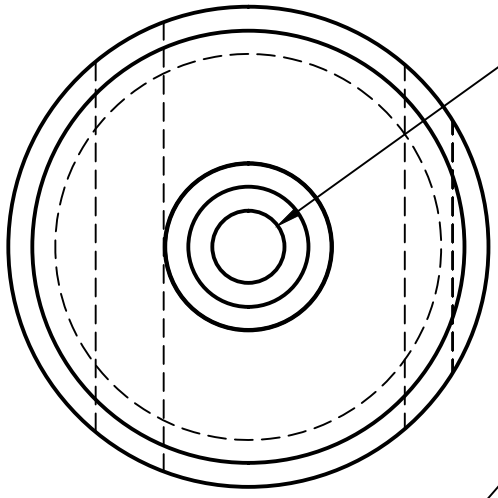

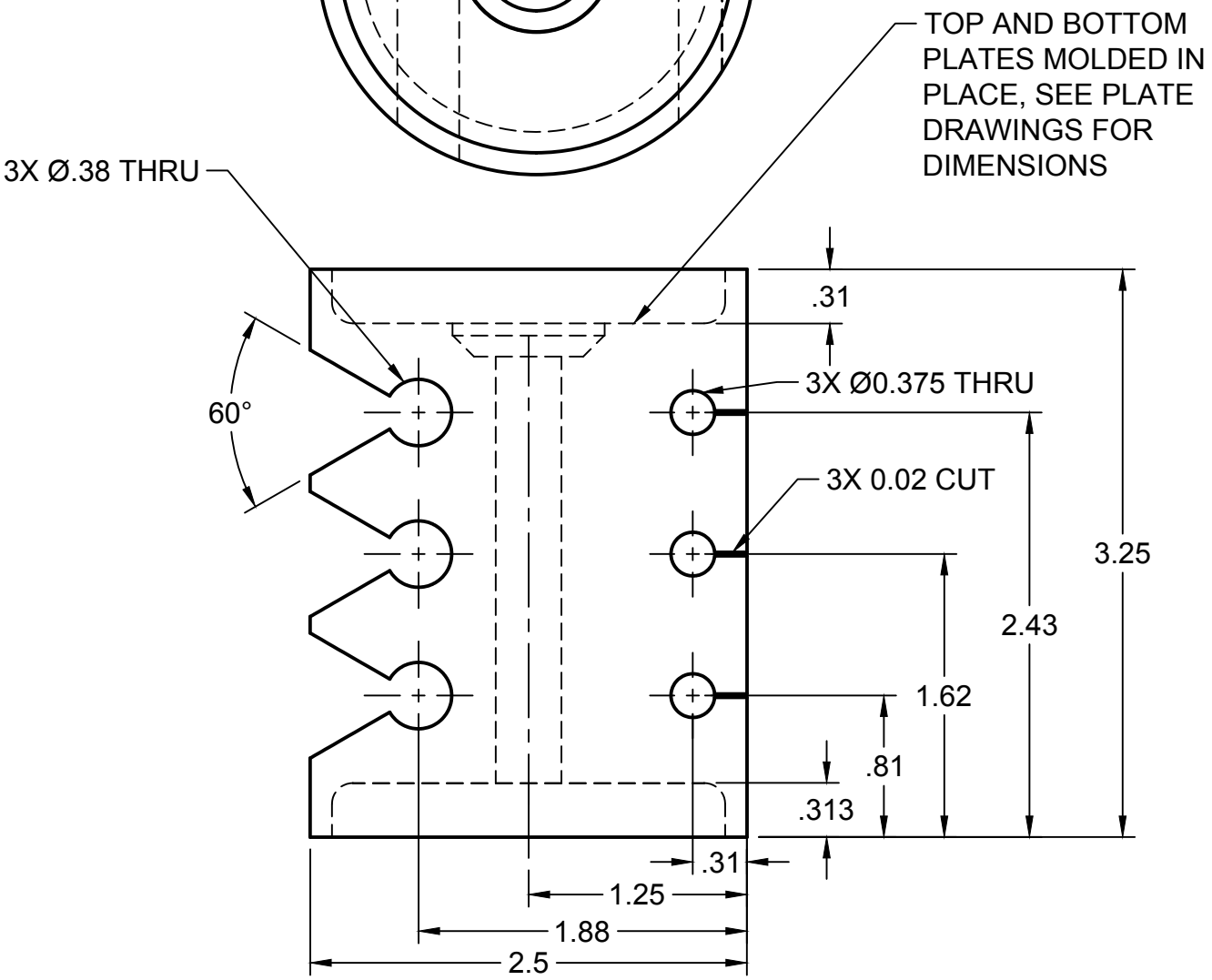

PROJECT

Hybrid III 6YO

TITLE

Molded Neck - Rubber, Butyl

Designer Contact: (214) 356-9043

APPROVED	SIZE	CODE	DWG NO	REV
CHECKED	A			
DRAWN Ben Randoing 8/29/21	SCALE 1:2	WEIGHT	SHEET 1/1	