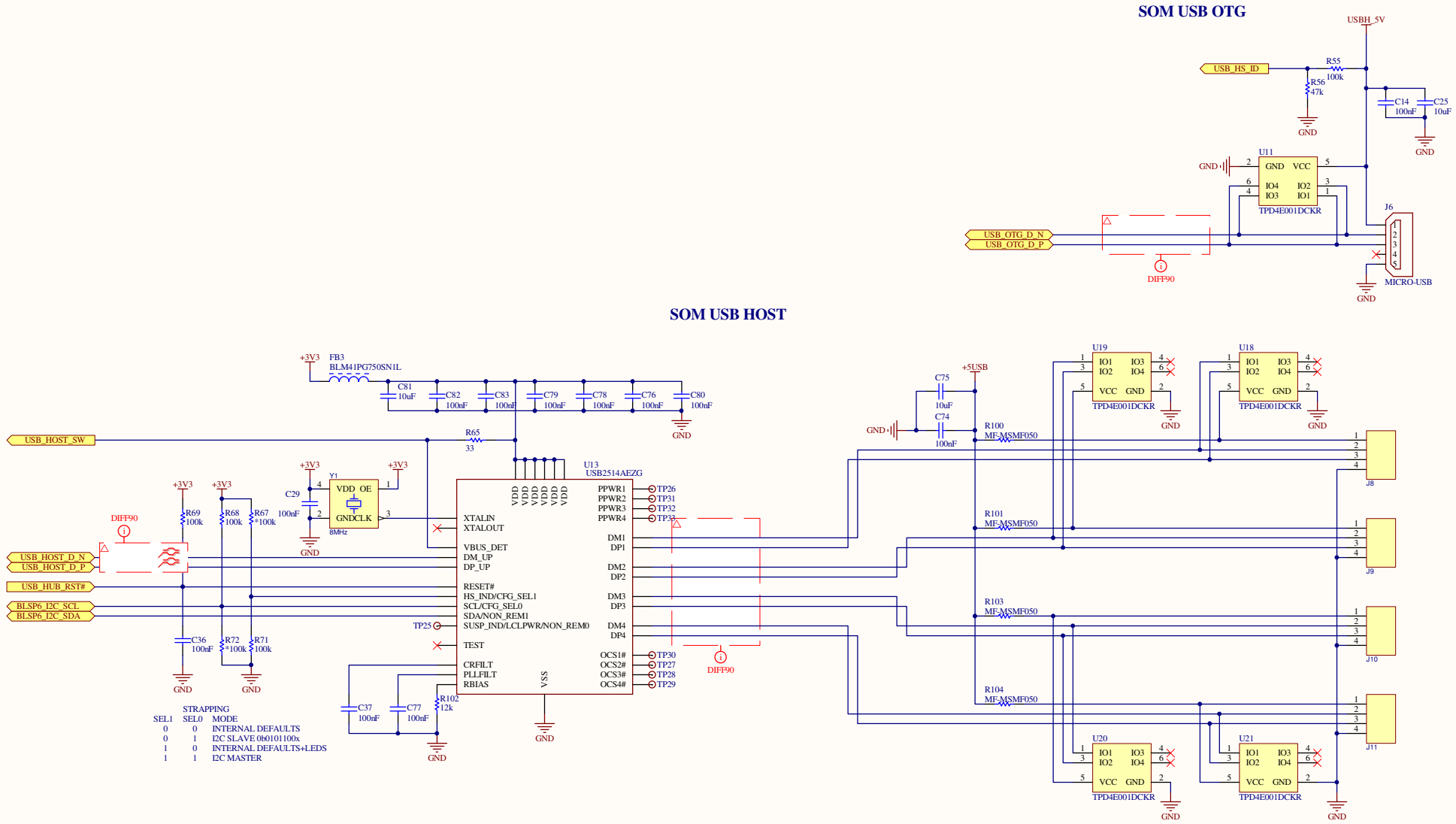
SOM USB OTG
USBH_5V
USB_HS_ID
R55
100k
R56
47k
C14
100nF
C25
10uF
GND
U11
GND VCC
IO4 IO2
IO3 IO1
TPD4E001DCKR
J6
USB_OTG_D_N
USB_OTG_D_P
DIFF90
MICRO-USB
SOM USB HOST
+3V3
FB3
BLM41PG750SN1L
C81
10uF
C82
100nF
C83
100nF
C79
100nF
C78
100nF
C76
100nF
C80
100nF
USB_HOST_SW
R65
33
C75
10uF
C74
100nF
+5USB
R100
MF-MSMF050
R101
MF-MSMF050
R103
MF-MSMF050
R104
MF-MSMF050
U19
U18
U20
U21
J8
J9
J10
J11
Y1
VDD OE
GNDCLK
8MHz
C29
100nF
U13
USB2514AEZG
VDD
XTALIN
XTALOUT
VBUS_DET
DM_UP
DP_UP
RESET#
HS_IND/CFG_SEL1
SCL/CFG_SEL0
SDA/NON_REM1
SUSP_IND/LCLPWR/NON_REM0
TEST
CRFILT
PLLFILT
RBIAS
VSS
PPWR1
PPWR2
PPWR3
PPWR4
DM1
DP1
DM2
DP2
DM3
DP3
DM4
DP4
OCS1#
OCS2#
OCS3#
OCS4#
TP26
TP31
TP32
TP33
TP25
TP30
TP27
TP28
TP29
DIFF90
USB_HOST_D_N
USB_HOST_D_P
USB_HUB_RST#
BLSP6_I2C_SCL
BLSP6_I2C_SDA
R69
100k
R68
100k
R67
*100k
C36
100nF
R72
*100k
R71
100k
C37
100nF
C77
100nF
R102
12k
STRAPPING
SEL1 SEL0 MODE
0 0 INTERNAL DEFAULTS
0 1 I2C SLAVE 0b0101100x
1 0 INTERNAL DEFAULTS+LEDS
1 1 I2C MASTER
Title
Size
Tabloid
Number
Revision
Date: 5/13/2016
File: C:\Users\.\3 - USB.SchDoc
Sheet of
Drawn By: