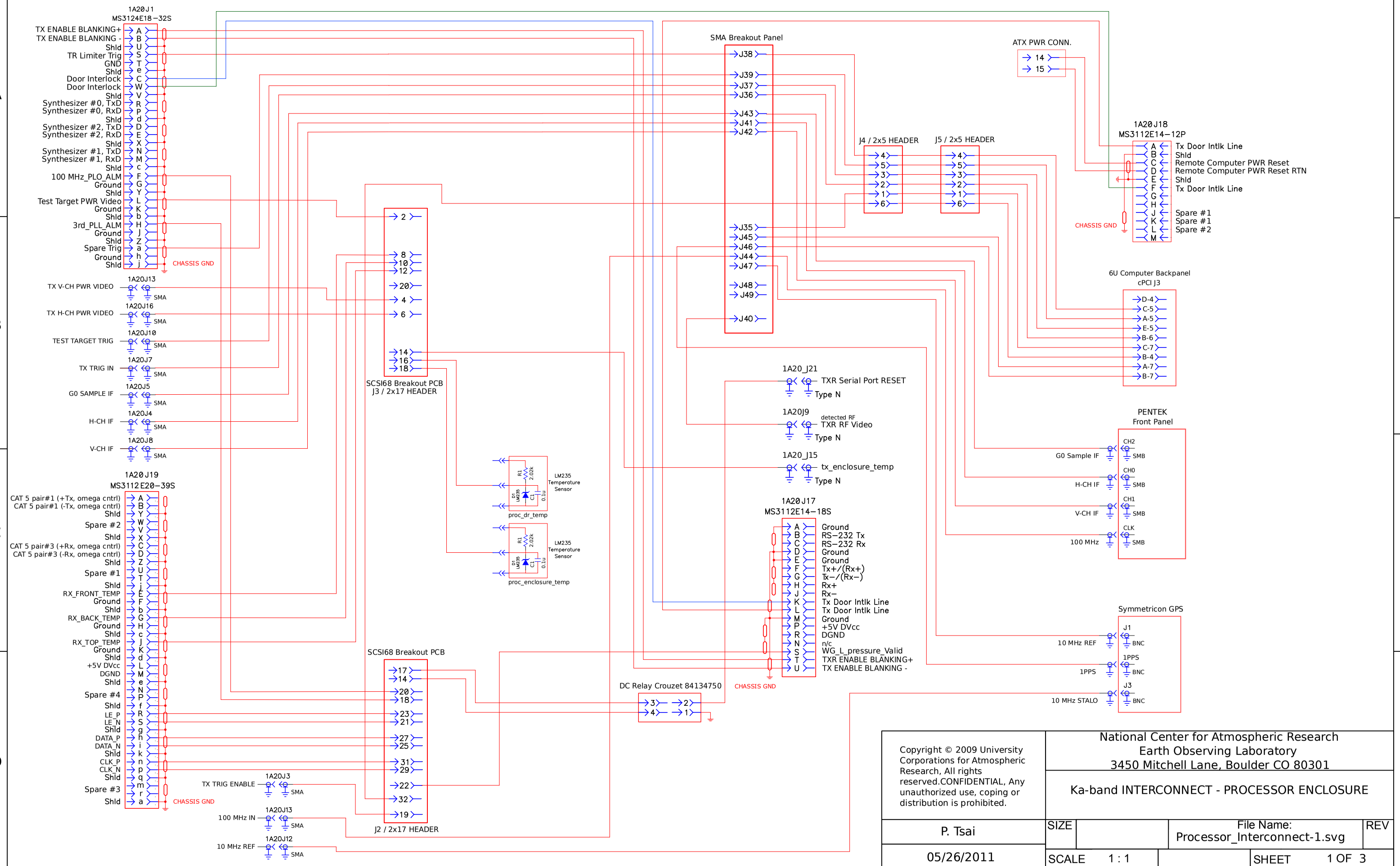

Copyright © 2009 University Corporations for Atmospheric Research, All rights reserved.CONFIDENTIAL, Any unauthorized use, coping or distribution is prohibited.

National Center for Atmospheric Research
Earth Observing Laboratory
3450 Mitchell Lane, Boulder CO 80301

Ka-band INTERCONNECT - PROCESSOR ENCLOSURE

P. Tsai

05/26/2011

SIZE		File Name: Processor_Interconnect-1.svg	REV
SCALE 1 : 1		SHEET 1 OF 3	