$t = 0$

N

$N/2$

$X(0)$

$t < 0$

$t = 1$

w

2^w

$f = 0.1$

$$\Omega = 2\pi F$$

γ

University *of* Glasgow | School of Engineering

$= 6 \cdot 10^{23}$

$1, 2, 3$

Analogue $\rightarrow$ A/D $\rightarrow$ Digital processing $\rightarrow$ D/A $\rightarrow$ Analogue

$$\underbrace{X_a(nT)}_{\text{analogue signal}} \equiv \underbrace{x(n)}_{\text{discrete data}}$$

T

$$X(n) \to X_q(n)$$

$X_q(n) \rightarrow$

$$X(n) = X_a(nT), \qquad -\infty < n < +\infty$$

$$F_s = \frac{1}{T_s}$$

$$X_a(t) = X_a(nT) = X_a(\frac{n}{F_s})$$

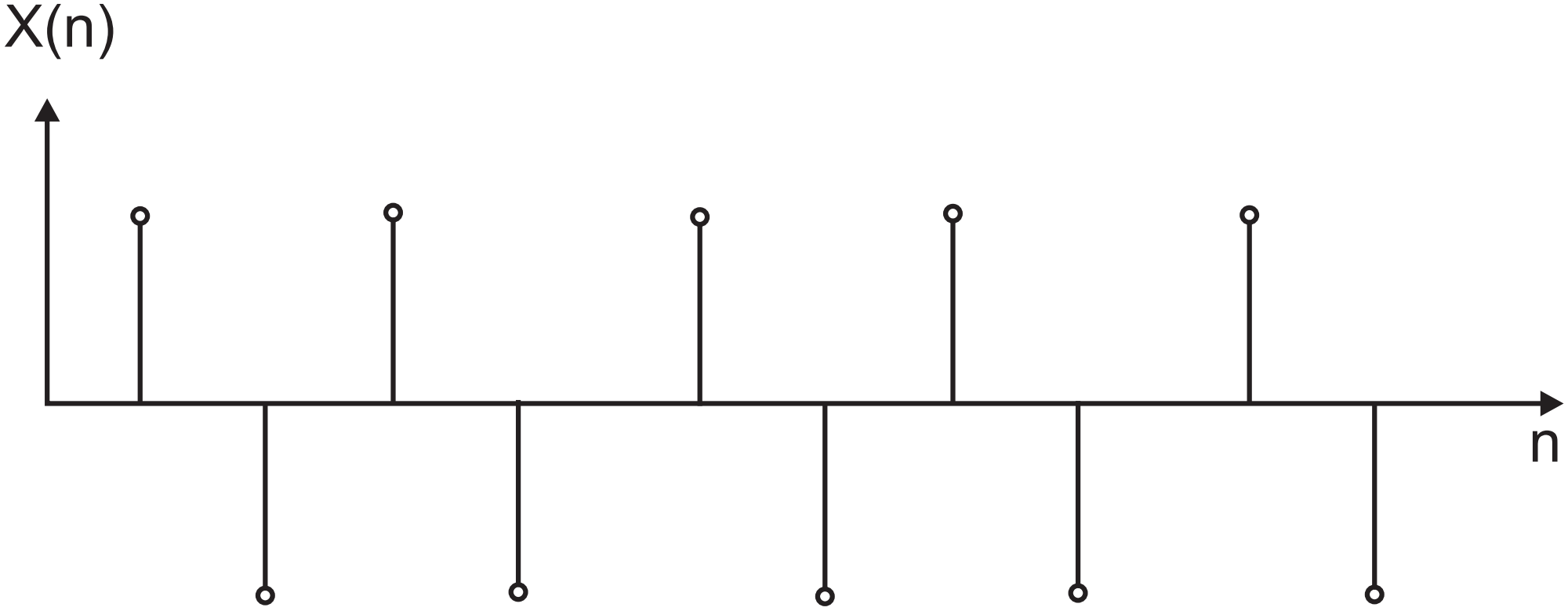
X(n)
n

$$X_a(t) = A\cos(2\pi Ft)$$

$$t = n/F_s$$

$$X_a(n) = A\cos(2\pi F/F_s n)$$

Normalised frequency: $f = \frac{F}{F_s}$

$$f_{\text{scipy}} = 2\frac{F}{F_s}$$

$f_{\text{scipy}} = 1$

$f = 0.5$

$$X_a(n) = A\cos(2\pi n f)$$

n

$f > 0.5$

$f = 1$

$$X_a(n) = \cos(2\pi n) = 1 \qquad f = 1$$

$f = 2, 3, 4, \ldots$

F/F_s

$0 \ldots \frac{1}{2} F_s$

$f = 0 \ldots 0.5$

$$B < \frac{1}{2} F_s$$

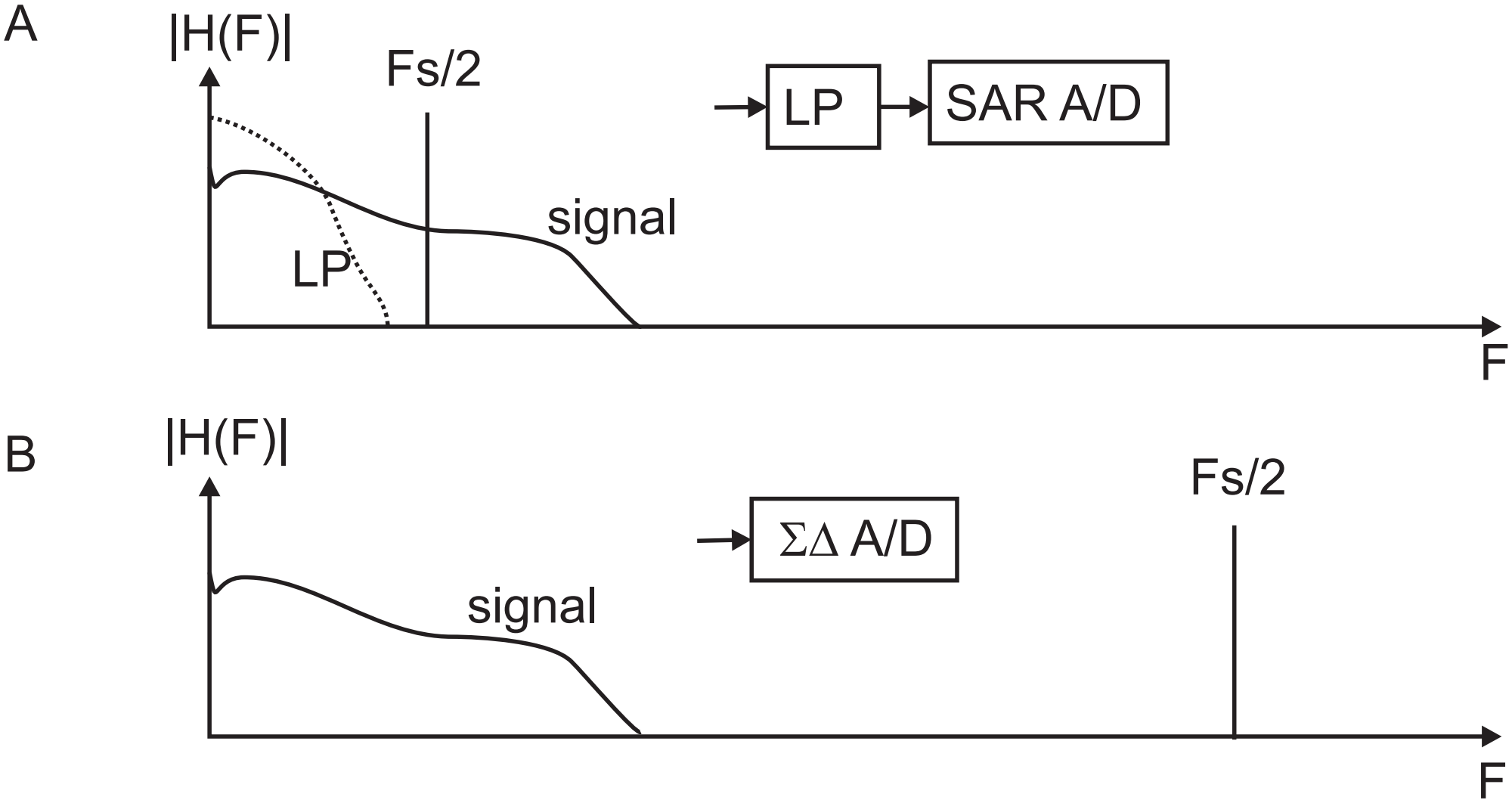
A
|H(F)|
Fs/2
LP
SAR A/D
signal
LP
F
B
|H(F)|
ΣΔ A/D
Fs/2
signal
F

$$F_s > 2F_{\max}$$

$$x_a(t) = \sum_{i=1}^{n} A_i \cos(2\pi F_i t + \Theta_i)$$

$$g(t) = \frac{\sin 2\pi Bt}{2\pi Bt}$$

$$B = F_{\max}$$

$$x_a(t) = \sum_{h=-a}^{a} x_a(\frac{n}{F_s})g(t - \frac{h}{F_s})$$

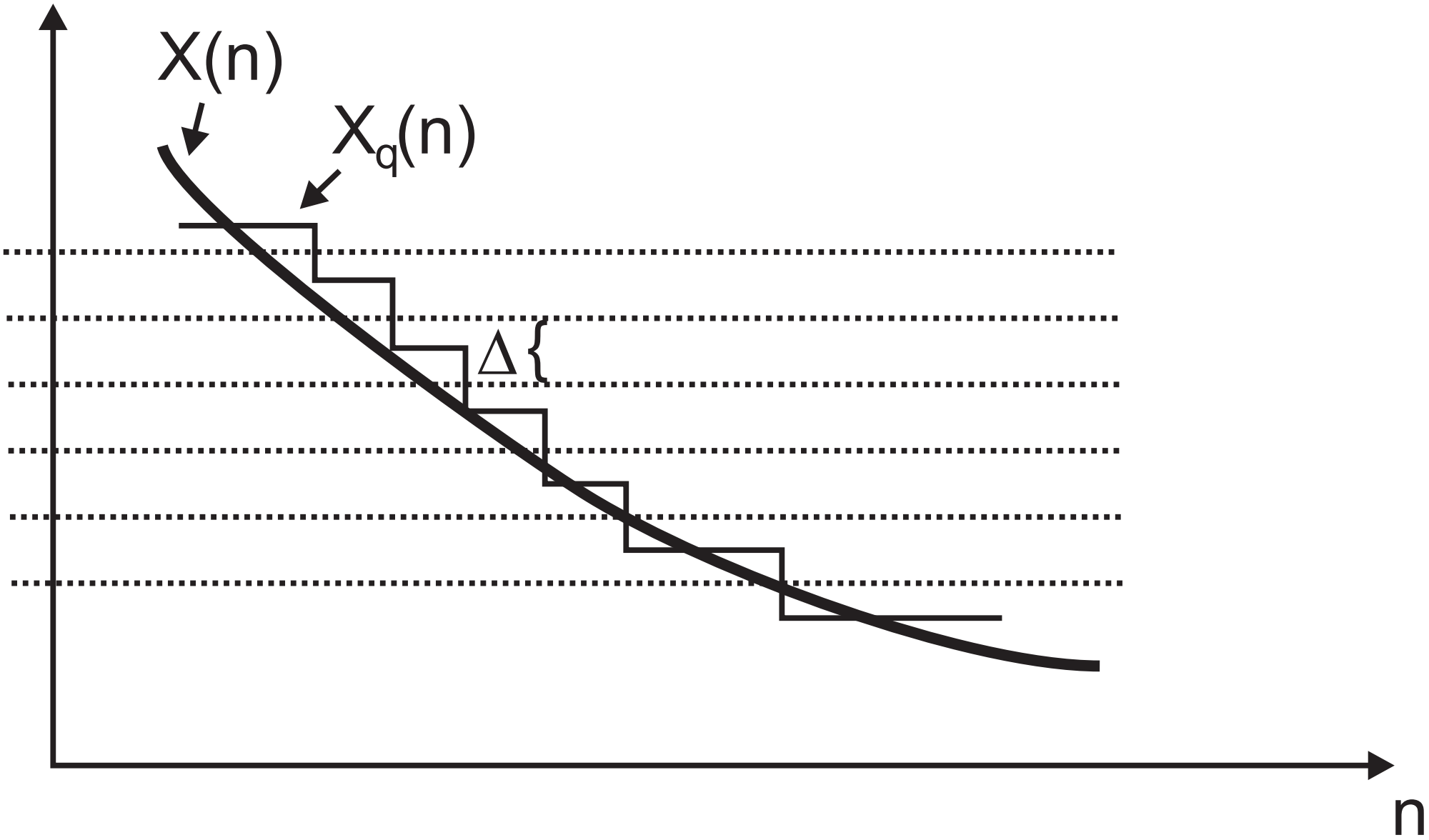
X(n)
$X_q(n)$
Δ{
n

$$\Delta = \text{quantisation step} = \frac{x_{\max} - x_{\min}}{L - 1}$$

$x_{\max} - x_{\min}$

$4.096V$

L

$$x_q(n) = Q[x(n)]$$

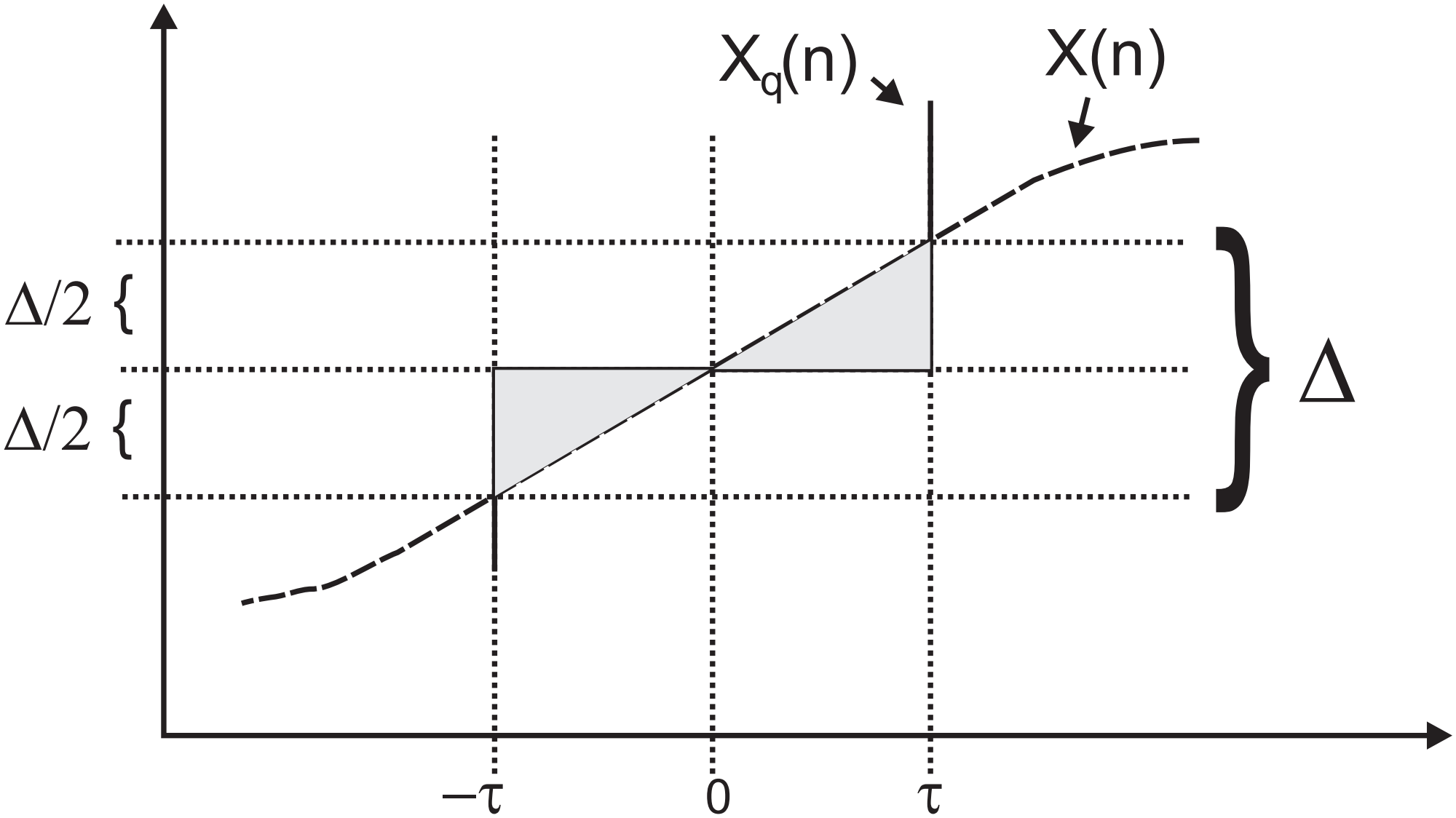
$X_q(n)$
$X(n)$
$\Delta/2$ {
$\Delta/2$ {
Δ
$-\tau$
0
τ

$$-\frac{\Delta}{2} \leq e(n) \leq \frac{\Delta}{2}$$

P_q

$$P_q = \frac{1}{\tau} \int_0^{\tau} e_q^2(t) dt$$

P_q

$$\frac{1}{\tau}\int_0^{\tau}\left(\frac{\Delta}{2\tau}\right)^2 t^2 dt$$

$$\frac{\Delta^2}{4\tau^3}\int_0^\tau t^2 dt$$

$$P_q = \frac{\Delta^2}{12\tau^3}\tau^3 = \frac{\Delta^2}{12}$$

$$P_x = \frac{1}{T_p} \int_0^{T_p} (A \cos \Omega t)^2 dt = \frac{A^2}{2}$$

SQNR

$$\frac{P_x}{P_q} = \frac{A^2}{2} \cdot \frac{12}{\Delta^2}$$

$$x(t) = \sum_{k=-\infty}^{\infty} c_k e^{j2\pi k F_1 t}$$

$k \neq 1$

C_k

1

C_k

$$c_k = \frac{1}{T_p} \int_{T_p} x(t) e^{-j2\pi k F_1 t} dt$$

$$c_k = c^*_{-k} \qquad \Leftrightarrow \qquad x(t) \text{ is real}$$

C_k

$$\mid c_k \mid e^{j\theta_k}$$

C_{-k}

$$\cos z = \frac{1}{2}\left(e^{zi} + e^{-zi}\right)$$

$$c_0 + \sum_{k=1}^{\infty} \mid c_k \mid e^{j\theta_k} e^{j2\pi k F_1 t} + \sum_{k=1}^{\infty} \mid c_k \mid e^{-j\theta_k} e^{-j2\pi k F_1 t}$$

$$c_0 + 2\sum_{k=1}^{\infty} \mid c_k \mid \cos(2\pi k F_1 t + \theta_k)$$

$$P_k = \left| \ c_k \ \right|^2$$

$$\frac{1}{T_1} = F_1$$

$$c_{-k} = c_k^*$$

$$X(F) = \int_{-\infty}^{\infty} x(t) e^{-j2\pi Ft} dt$$

$$x(t) = \frac{1}{2\pi} \int_{-\infty}^{\infty} X(F) e^{j2\pi Ft} dF$$

$$X(\omega) = \sum_{n=-\infty}^{\infty} x(n) e^{-j\omega n}$$

$$\frac{1}{2\pi}\int_{-\pi}^{\pi} X(\omega)e^{j\omega n}d\omega$$

$$\frac{1}{2\pi}\int_{-0.5}^{0.5} X(f)e^{j2\pi fn}dt$$

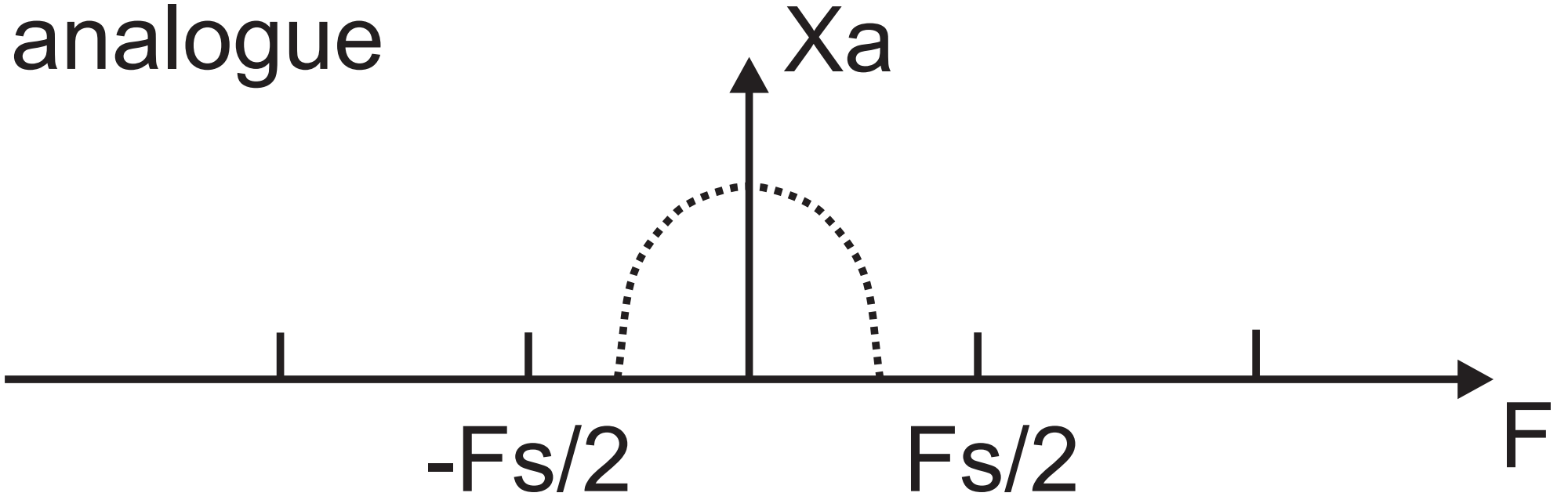
analogue
Xa
-Fs/2
Fs/2
F

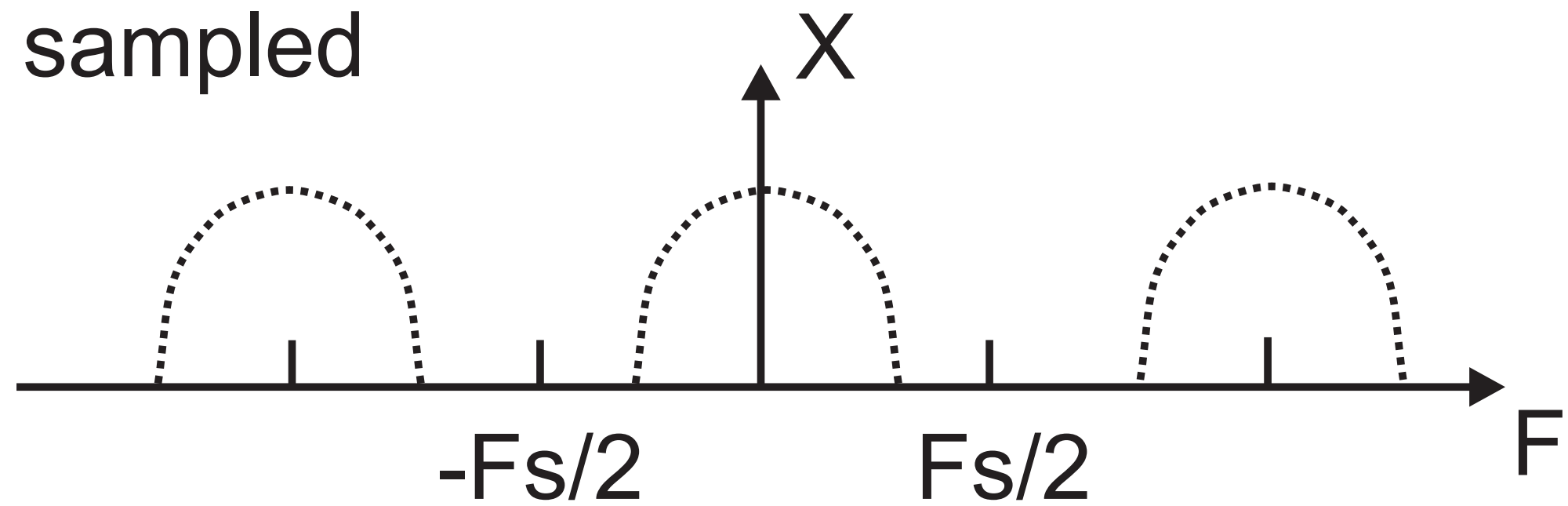
sampled
X
-Fs/2
Fs/2
F

$$X(F) \Leftrightarrow X_a(F)$$

$$\int_{-0.5}^{0.5} \underbrace{X(f)}_{\text{sampled}} \; e^{j2\pi fn} df = \int_{-\infty}^{+\infty} \underbrace{X_a(F)}_{\text{cont}} \, e^{j2\pi nF/F_s} dF$$

$$f = F/F_s$$

$$\frac{1}{F_s}\int_{-F_s/2}^{F_s/2} X(\frac{F}{F_s})e^{j2\pi nF/F_s}dF = \int_{-\infty}^{+\infty} X_a(F)e^{j2\pi nF/F_s}dF$$

$$\int_{-\infty}^{+\infty} X_a(F) e^{j2\pi n \frac{F}{F_s}} dF$$

$$\sum_{k=-\infty}^{\infty} \int_{-\frac{1}{2}F_s+kF_s}^{+\frac{1}{2}F_s+kF_s} X_a(F) e^{j2\pi n \frac{F}{F_s}} \, dF$$

$$\sum_{k=-\infty}^{\infty} \int_{-\frac{1}{2}F_s}^{+\frac{1}{2}F_s} X_a(F - kF_s) \underbrace{e^{j2\pi n \frac{F}{F_s}}}_{kF_s \text{ omit.}} dF$$

$$\int_{-\frac{1}{2}F_s}^{+\frac{1}{2}F_s} \underbrace{\sum_{k=-\infty}^{\infty} X_a(F - kF_s)}_{=X(F) \text{ of Eq. } 43} e^{j2\pi n \frac{F}{F_s}} dF$$

$$F_s \sum_{k=-\infty}^{\infty} X_a(F - kF_s)$$

$$F_s \sum_{k=-\infty}^{\infty} X_a[(f-k)F_s]$$

$F_s/2$

$-F/2 \ldots F/2$

$-F/2+34 \ldots F/2+34$

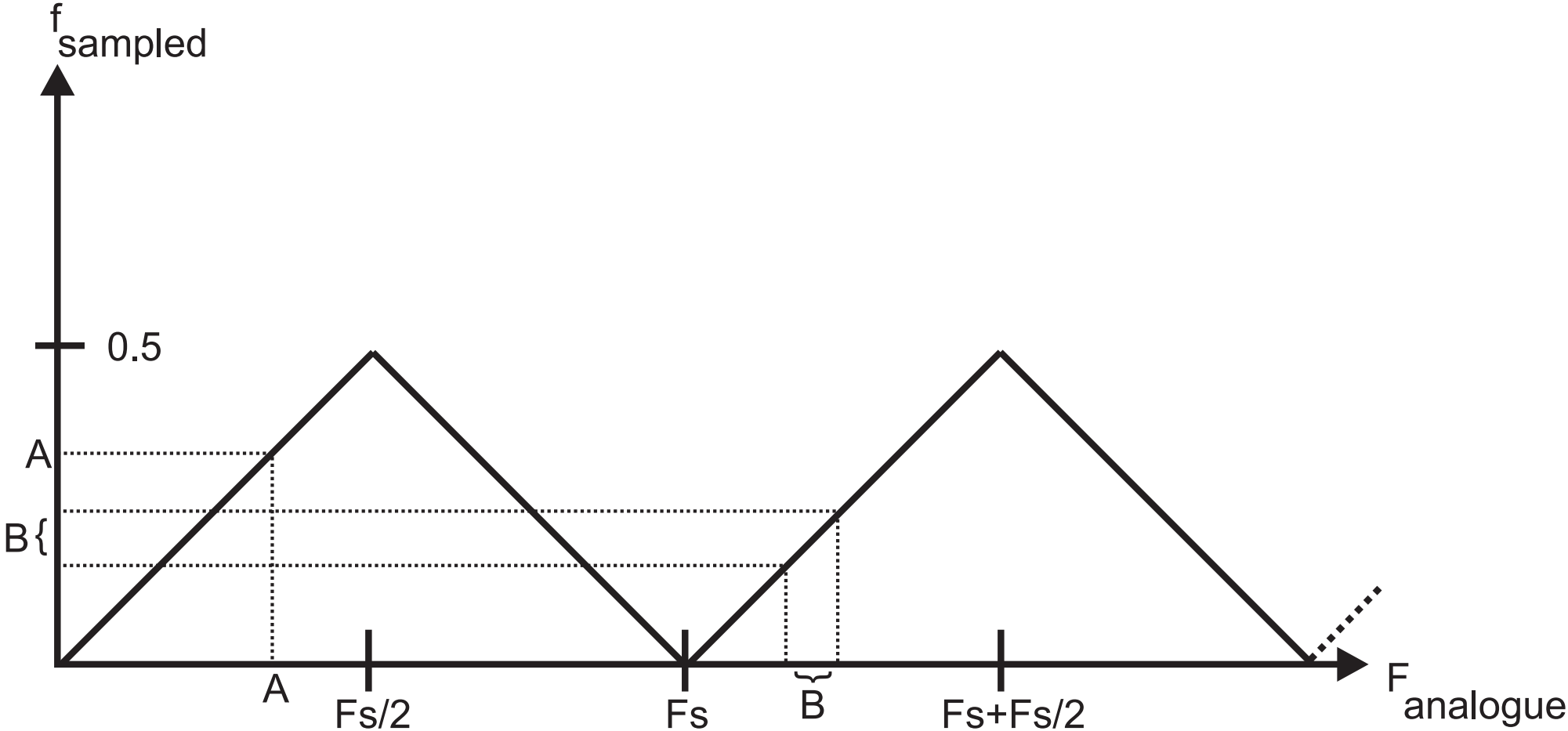
f sampled
0.5
A
B{
A
Fs/2
Fs
B
Fs+Fs/2
F analogue

$$F_s \ldots F_s + 1/2 F_s$$

$$F_s = 2B$$

$$X(k) = \sum_{n=0}^{N-1} x(n) e^{-j2\pi kn/N} \qquad k = 0, 1, 2, \ldots, N-1$$

$$x(n) = \frac{1}{N} \sum_{k=0}^{N-1} X(k) e^{j2\pi kn/N} \qquad n = 0, 1, 2, \ldots, N-1$$

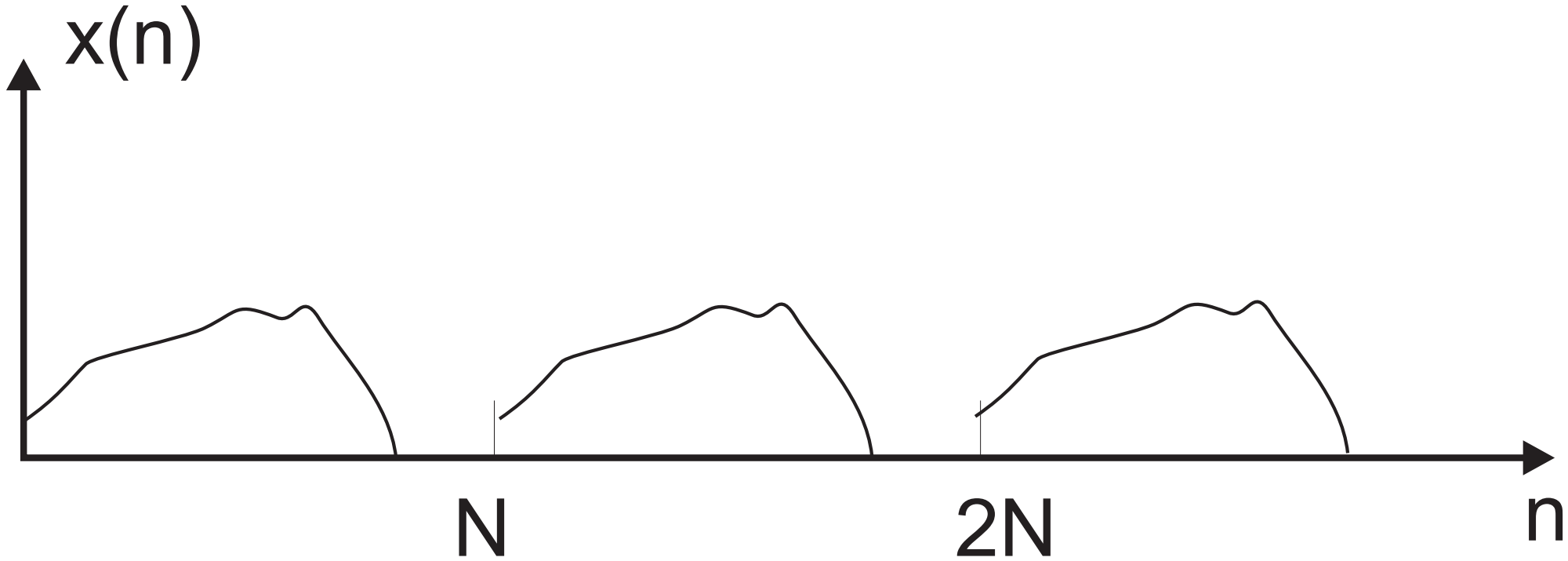
x(n)
N
2N
n

$$X\left(\frac{2\pi}{N}k\right) = \sum_{n=-\infty}^{\infty} x(n)e^{-j\frac{2\pi}{N}kn} \qquad k = 0, \ldots, N-1$$

$$X\left(\frac{2\pi}{N}k\right)$$

$$\sum_{l=-\infty}^{\infty} \sum_{n=lN}^{lN+N-1} x(n) e^{-j\frac{2\pi}{N}kn}$$

$$\sum_{l=-\infty}^{\infty} \sum_{n=0}^{N-1} x(n - lN) e^{-j \frac{2\pi}{N} kn}$$

$$\sum_{n=0}^{N-1} \underbrace{\sum_{l=-\infty}^{\infty} x(n - lN)}_{\text{Periodic repetition!}} \quad e^{-j\frac{2\pi}{N}kn}$$

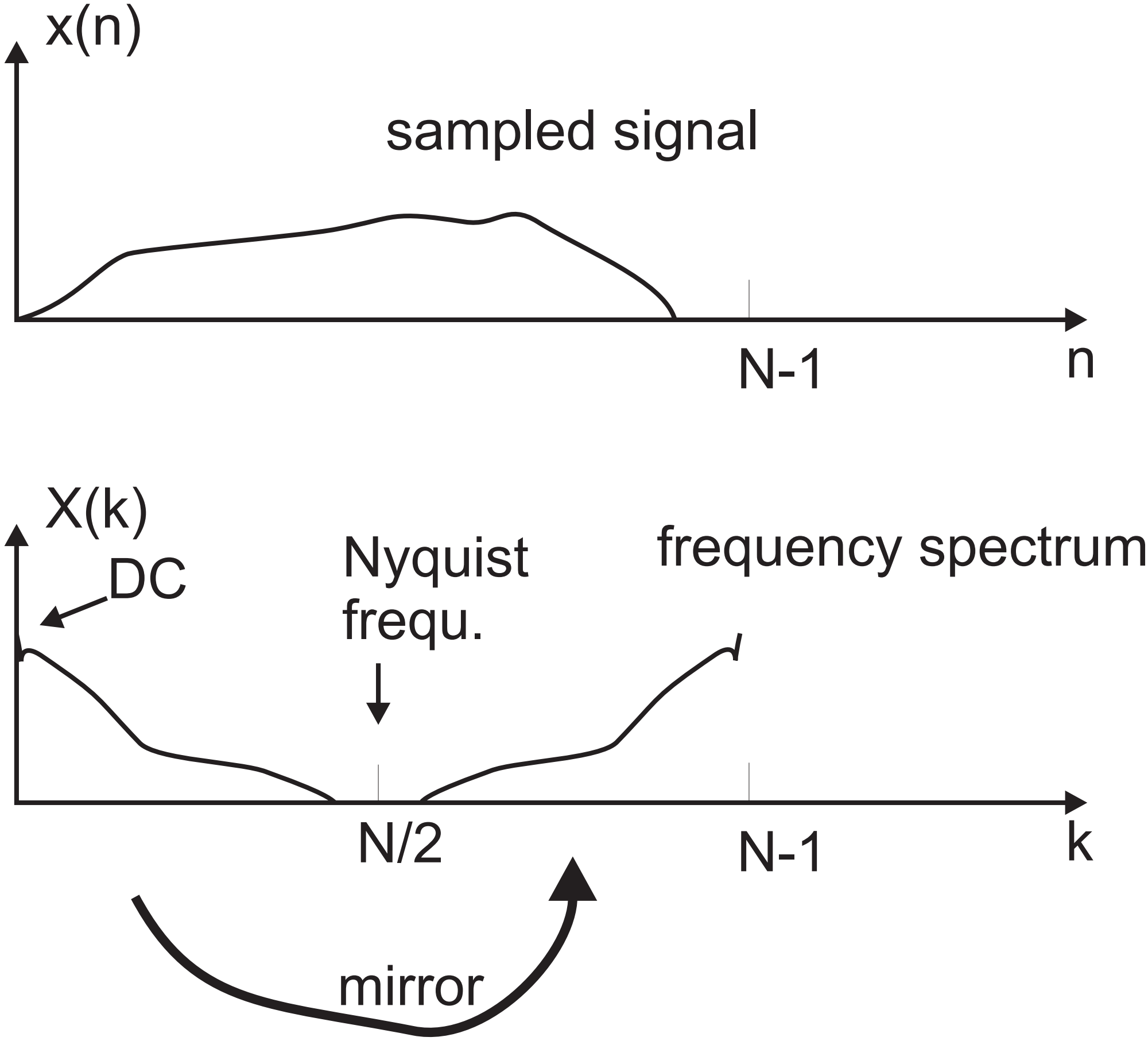
x(n)
sampled signal
N-1
n
X(k)
DC
Nyquist
frequ.
frequency spectrum
N/2
N-1
k
mirror

$X(N/2)$

$x(n+N)$

$X(k+N)$

$x(n)$ is real $\Leftrightarrow X^*(k) = X(-k) = X(N-k)$

$x(-n)$

$X(N-k)$

$$X_1(k)X_2(k) \leftrightarrow x_1(n) * x_2(n)$$

$$x_3(m) = \sum_{n=0}^{N-1} x_1(n) x_2(m-n)$$

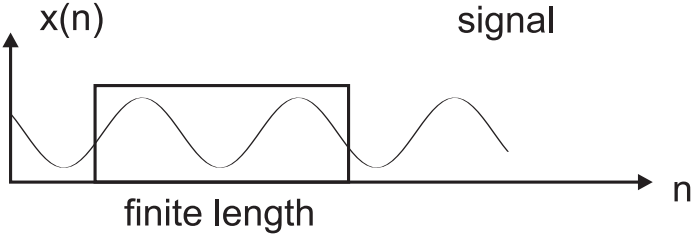
x(n)
signal
n
finite length

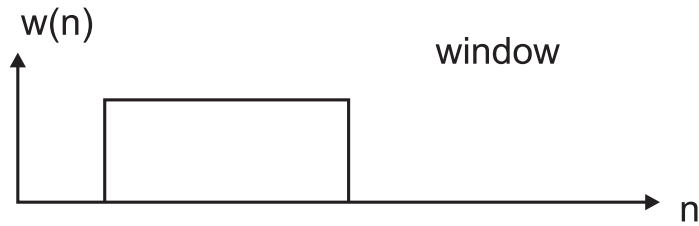
w(n)
window
n

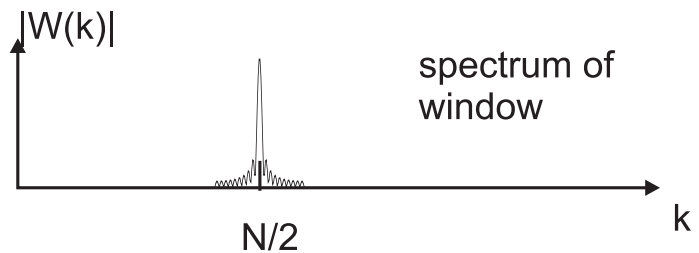
|W(k)|
spectrum of
window
k
N/2

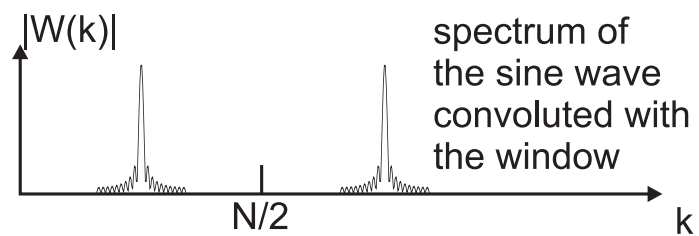
|W(k)|
spectrum of
the sine wave
convoluted with
the window
N/2
k

$$x_w(n) = x(n) \cdot w(n)$$

x

$w(n)$

$n = 0$

$$n = L - 1$$

$$x(n) = \cos \omega_0 n$$

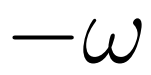

$$W(\omega) = \frac{sin(\omega L/2)}{sin(\omega/2)} e^{-j\omega(L-1)/2}$$

$$X_3(\omega) = X(\omega) * W(\omega)$$

$$X(k) = \sum_{n=0}^{N-1} x(n) W_N^{kn}$$

$$W_N = e^{-j2\pi/N}$$

N^2

$x(2m)$

$x(2m+1),$

$$m = 0, ..., \frac{N}{2} - 1$$

$$W_N^{2mk} = W_{N/2}^{mk}$$

$$\sum_{m=0}^{N/2-1} x(2m) W_N^{2mk} + \sum_{m=0}^{N/2-1} x(2m+1) W_N^{k(2m+1)}$$

$$\sum_{m=0}^{N/2-1} x(2m) W_{N/2}^{mk} + W_N^k \sum_{m=0}^{N/2-1} x(2m+1) W_{N/2}^{mk}$$

$$F_e(k) + W_N^k F_o(k)$$

$(N/2)^2$

$$2 \cdot (N/2)^2 = \frac{N^2}{2}$$

$$F_e(k)$$

$F_{ee}(k), F_{eo}(k), F_{oe}(k)$

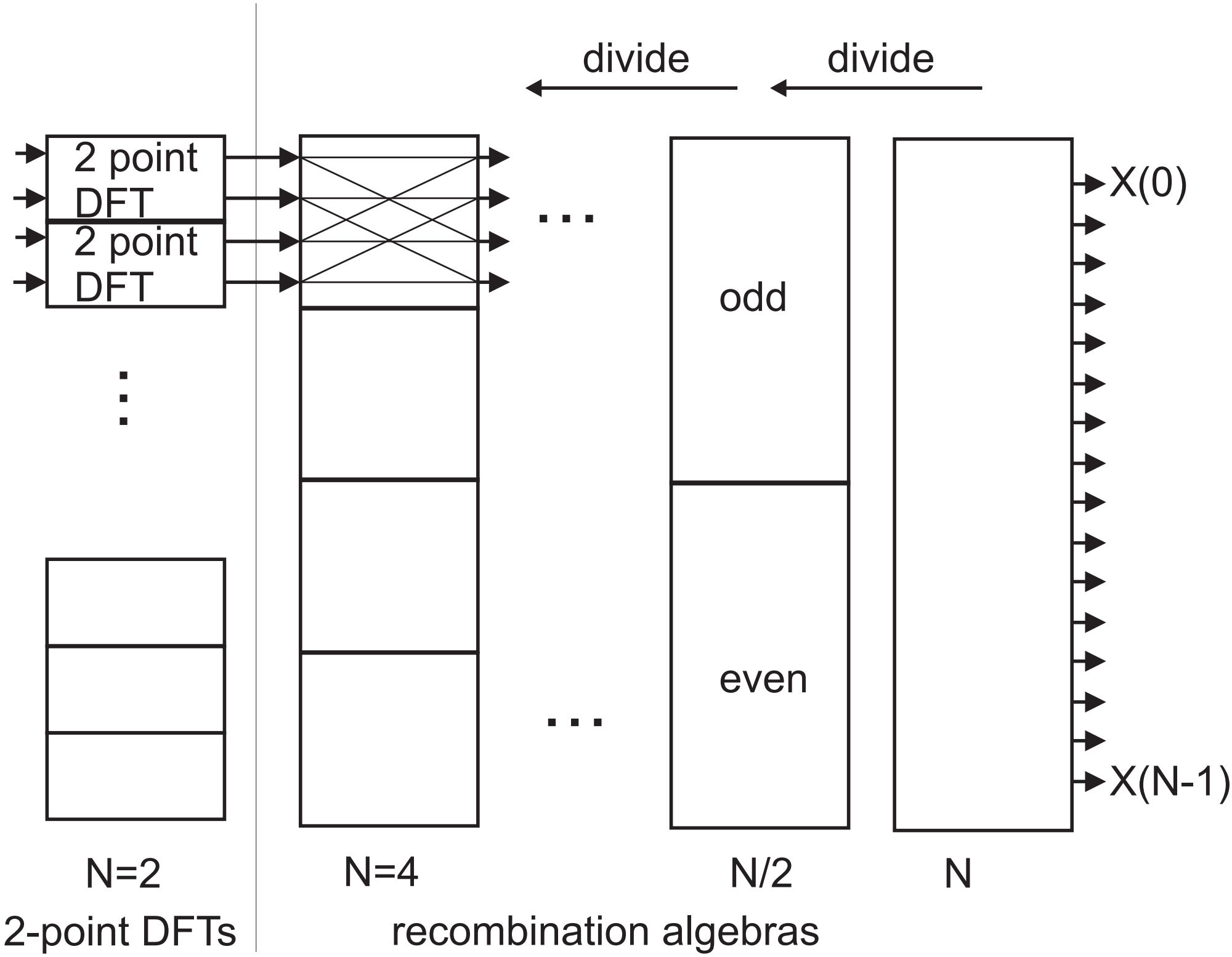
divide
divide
2 point DFT
2 point DFT
odd
even
X(0)
X(N-1)
N=2
N=4
N/2
N
2-point DFTs
recombination algebras

$$X_i(k) = X_{ie}(k) + W_L^k X_{io}(k)$$

$N = 2$

$\mathrm{DC}: \qquad X(0)$

$$x(0) + \underbrace{W_2^0}_{1} x(1) = x(0) + x(1)$$

Nyquist frequ.: $X(1)$

$$x(0) + \underbrace{W_2^1}_{-1} x(1) = x(0) - x(1)$$

$1, -1, 1, -1, \ldots$

$N \log_2 N$

$1, -1, j, -j$

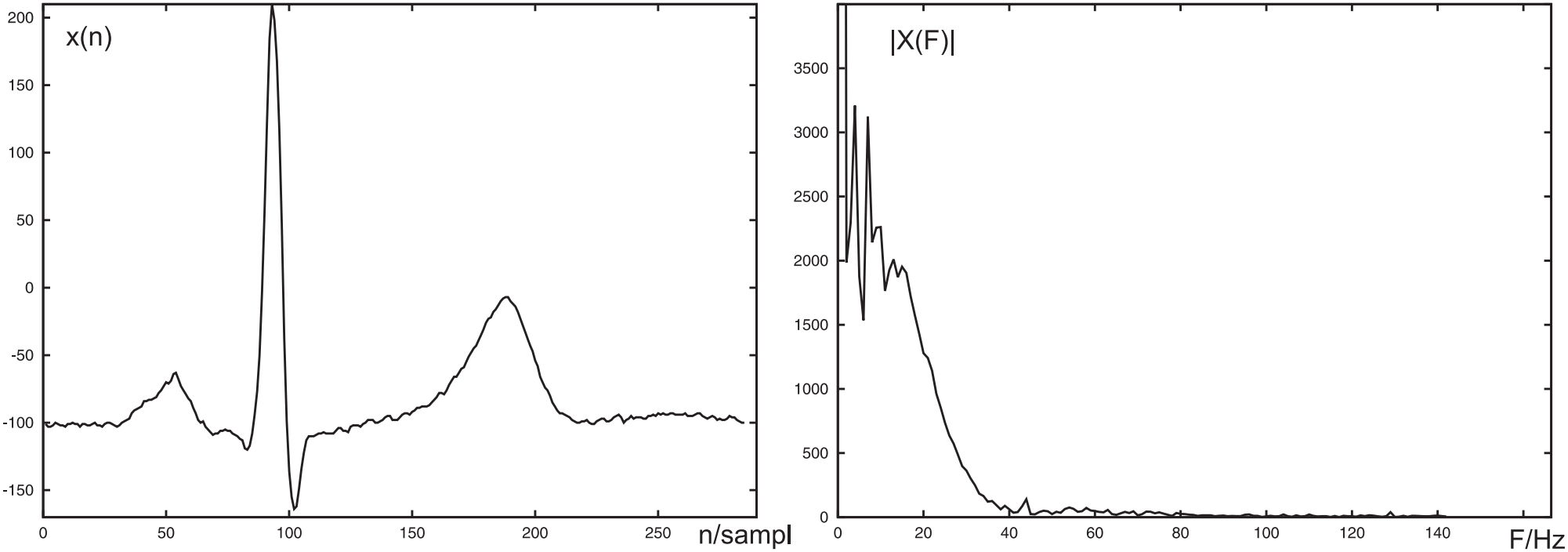
x(n)
200
150
100
50
0
-50
-100
-150
0
50
100
150
200
250
n/sampl
|X(F)|
3500
3000
2500
2000
1500
1000
500
0
0
20
40
60
80
100
120
140
F/Hz

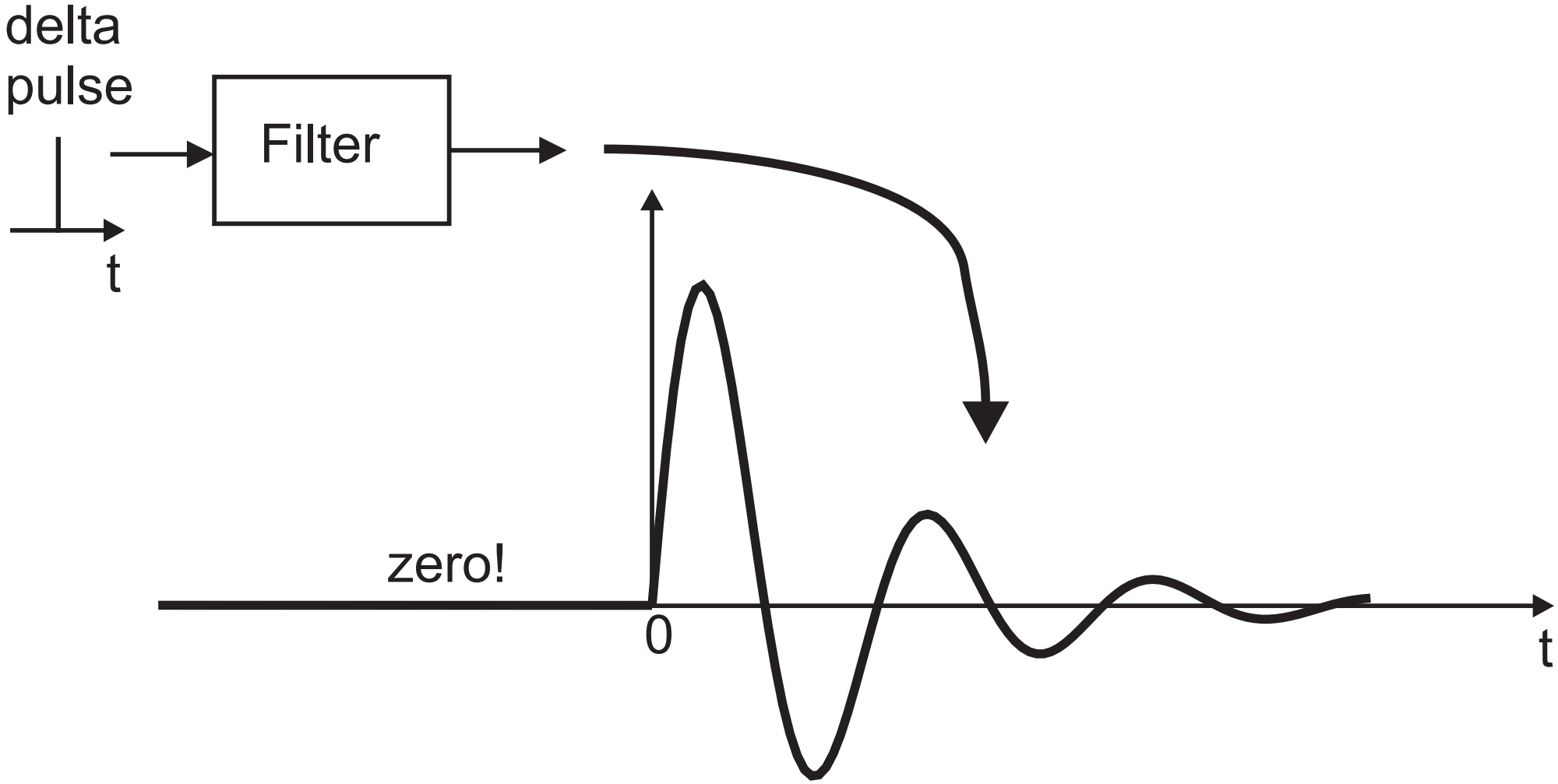
delta
pulse
t
Filter
zero!
0
t

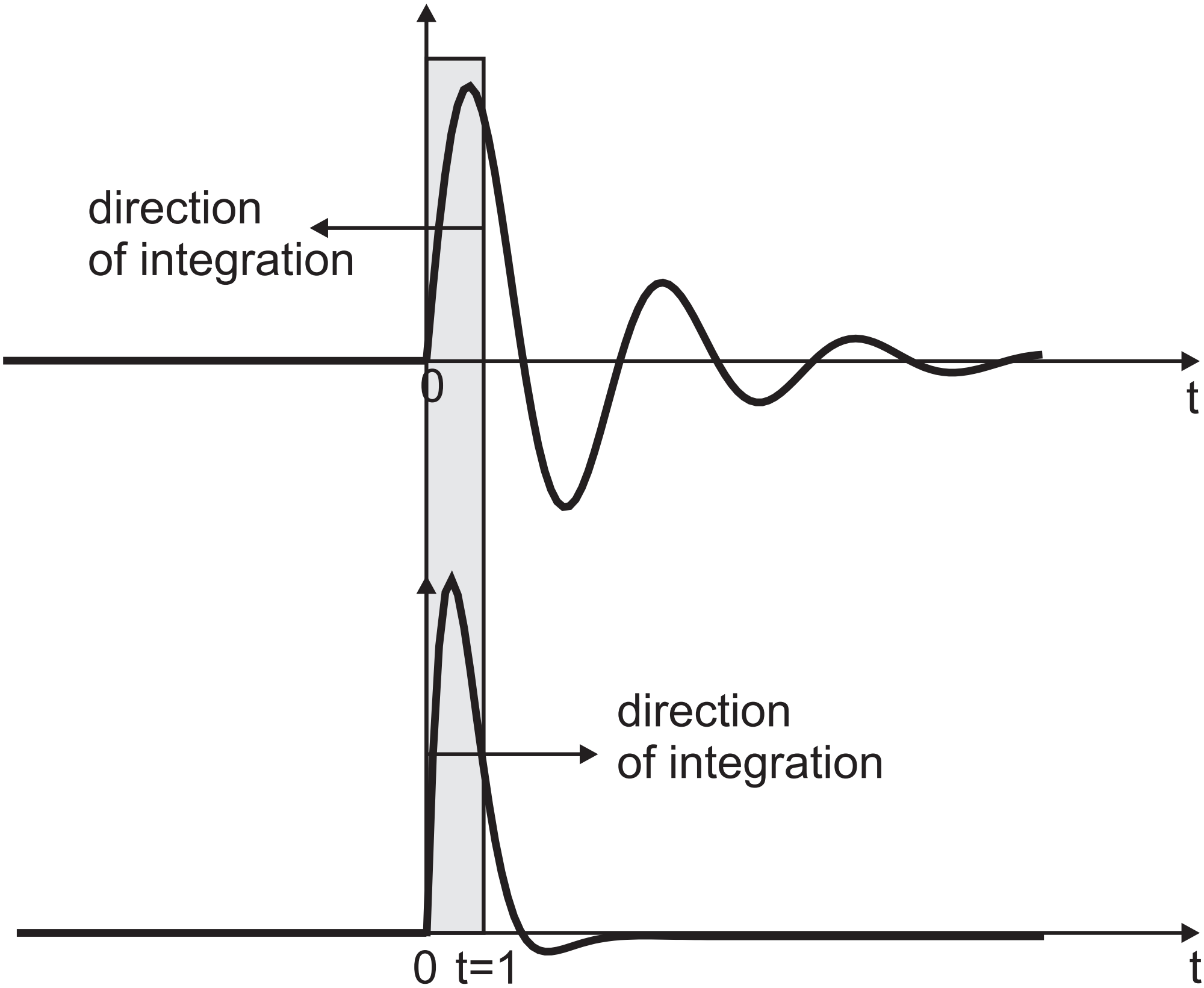
direction
of integration
0
t
direction
of integration
0 t=1
t

$$h(t) * x(t) = \int_{-\infty}^{\infty} h(t-\tau)x(\tau)d\tau$$

$y(n)$

$$h(n) * x(n) = \sum_{n=-\infty}^{\infty} h(n)x(m-n)$$

$h(0)$

$t > 0$

$$x(t) = \delta(t)$$

$$y(t) = \int_{-\infty}^{\infty} h(t-\tau)\delta(\tau)d\tau = h(t)$$

$$-\infty < t < +\infty$$

$$\mathbf{LT}(h(t)) = H(s) = \int_0^\infty h(t)e^{-st}dt$$

$$\int f(\tau)d\tau \Leftrightarrow \frac{1}{s}F(s)$$

$$\frac{d}{dt} f(t) \Leftrightarrow sF(s)$$

$$f(t-T) \Leftrightarrow e^{-Ts}F(s)$$

$$\mathbf{LT}(h(t-T))$$

$$\int_0^\infty h\underbrace{(t-T)}_{causal}e^{-st}dt$$

$$\int_0^\infty h(t)e^{-s(t+T)}\,dt$$

$$\int_0^\infty h(t)e^{-st}e^{-sT}dt$$

$$e^{-sT} \underbrace{\int_0^\infty h(t)e^{-st}dt}_{H(s)}$$

$$f(t) * g(t) \Leftrightarrow F(s)G(s)$$

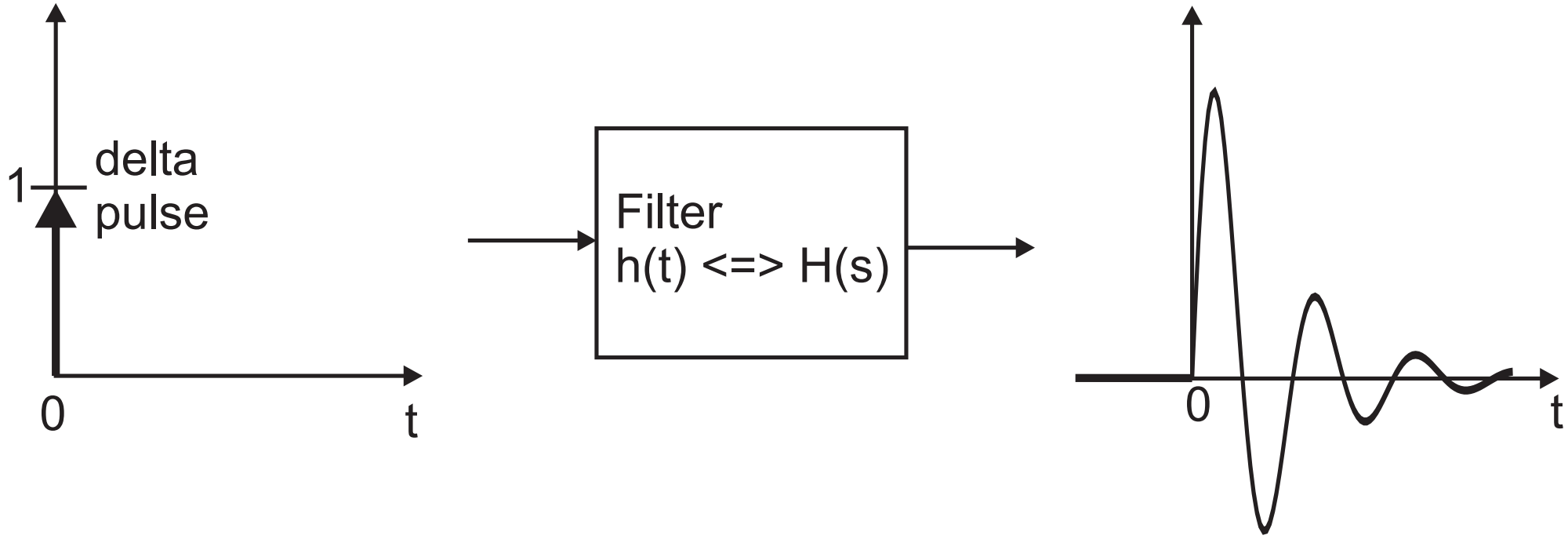
1
delta
pulse
0
t
Filter
h(t) <=> H(s)
0
t

$$g(t) = h(t) * x(t) \Leftrightarrow Y(s) = H(s) \cdot X(s)$$

$\delta(t) \qquad \leftarrow$ delta pulse

$y(t) \quad \leftarrow$ impulse response

$H(j\omega)$

$$\phi = \arg\left(H(i\omega)\right)$$

$$\tau_\omega = \frac{d\phi(\omega)}{d\omega}$$

$$x(t) = \sum_{n=0}^{\infty} x(n)\delta(t - nT) \qquad \text{Sampled signal}$$

$$\sum_{n=0}^{\infty} x(n)e^{-snT}$$

$$\int_0^\infty x(n)e^{-st}dt$$

$$\sum_{n=0}^{\infty} x(n) \underbrace{\left(e^{-sT}\right)^n}_{z^{-1}=e^{-sT}}$$

$$\sum_{n=0}^{\infty} x(n)(z^{-1})^n$$ z-transform

$$e^{-sT} = z^{-1}$$

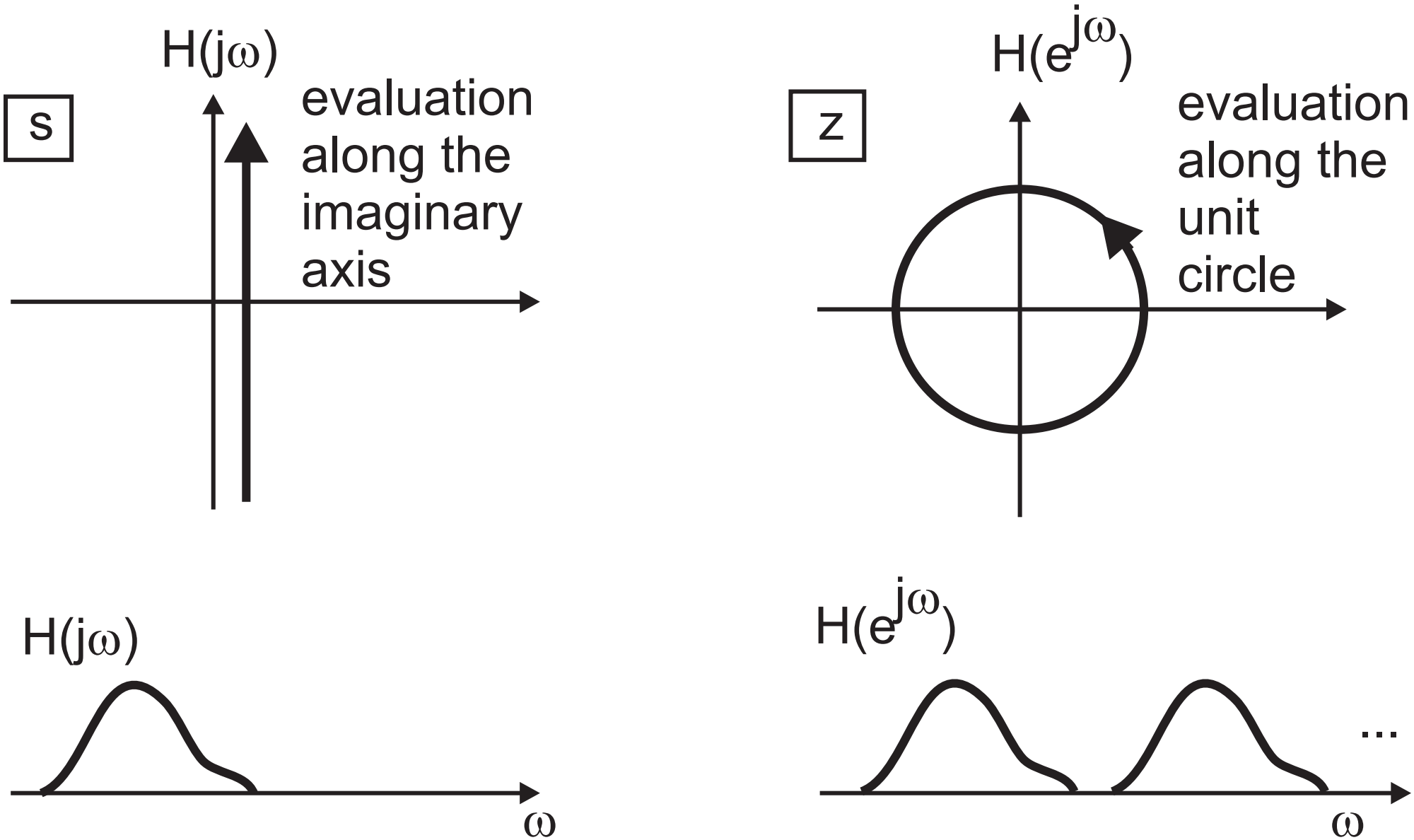
H(jω)
s
evaluation
along the
imaginary
axis
H(e^jω)
z
evaluation
along the
unit
circle
H(jω)
ω
H(e^jω)
...
ω

$H(s)$

$$s = j\omega$$

S

z

$$z^{-1} = e^{-sT}$$

$$z = e^{sT}$$

$$z = e^{j\omega}$$

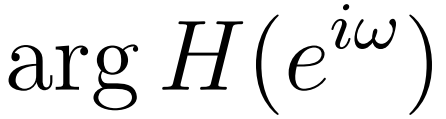

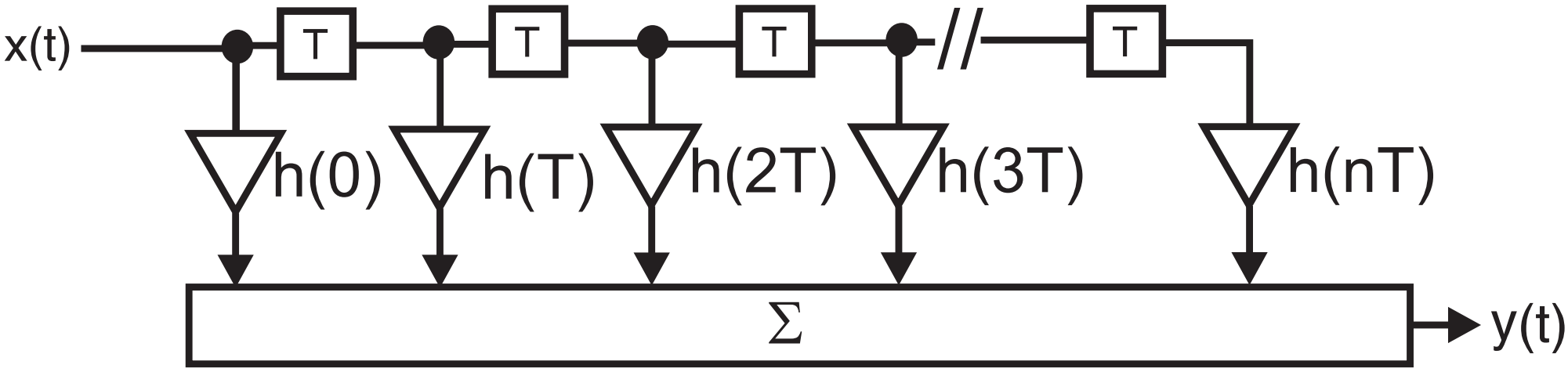
x(t)
T
T
T
//
T
h(0)
h(T)
h(2T)
h(3T)
h(nT)
Σ
y(t)

$$h(t) = \sum_{n=0}^{\infty} h(nT)\delta(t - nT)$$

$$H(s) = \sum_{n=0}^{\infty} h(nT) \underbrace{\left(e^{-sT}\right)}_{z^{-1}}^{n}$$

z^{-n}

$$H(z) = \sum_{n=0}^{\infty} h(nT)(z^{-1})^n$$

$H(z)$

$$H(z)X(z) = \underbrace{\sum_{n=0}^{\infty} h(nT)z^{-n}}_{H(z)} X(z)$$

$h(nT)$

100

$N = 100$

$$H(z)X(z) = \underbrace{\sum_{n=0}^{N} h(nT)z^{-n}}_{H(z)} X(z)$$

$$H(z)X(z)$$

$$\sum_{n=0}^{N} h_{\text{analogue}}(nT) z^{-n} \, X(z)$$

$$\sum_{n=0}^{N} h_{\text{digital}}(n) z^{-n} X(z)$$

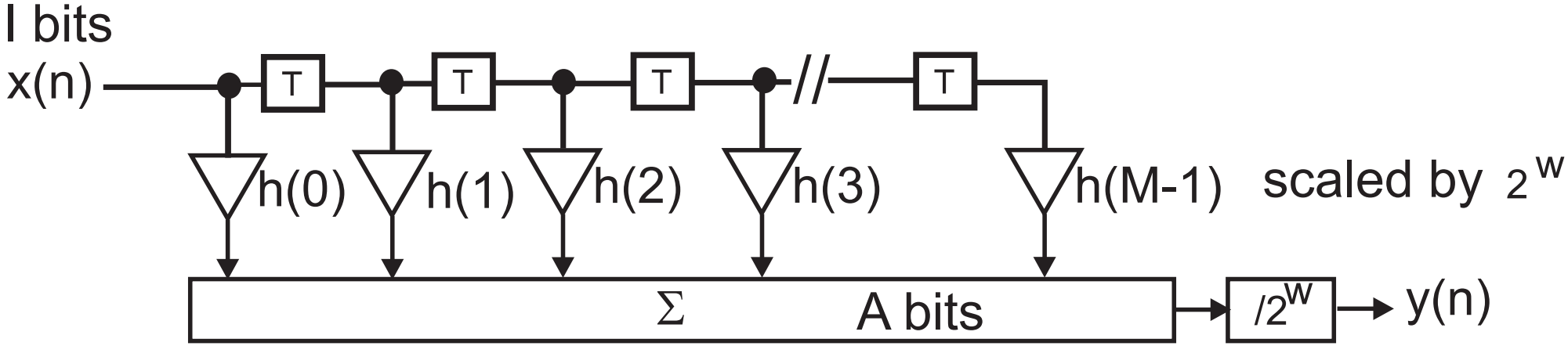
I bits
x(n)
T
T
T
//
T
h(0)
h(1)
h(2)
h(3)
h(M-1)
scaled by 2^w
Σ
A bits
$/2^w$
y(n)

$+0.75$

$2^W, W = 15$

$\log_2 M$

$$A = I + W + \log_2 M$$

$$A = I + W$$

16

32

$$\tau_\omega = \frac{d\phi(\omega)}{d\omega}$$

$$H(e^{i\omega}) = B(\omega)e^{-i\omega\tau+i\phi}$$

$B(\omega)$

$$h(n) = \frac{1}{2\pi} \int_{-\infty}^{+\infty} H(e^{i\omega}) e^{i\omega n} d\omega$$

$$h(n+\tau) = \frac{1}{2\pi} e^{i\phi} b(n)$$

$$b(n) = b^*(-n)$$

$$h(n+\tau) = \frac{1}{2\pi} e^{i\phi} b^*(-n)$$

$$h(n+\tau) = e^{2i\phi} n^*(-n+\tau)$$

τ

$n < 0$

$\tau = M/2$

$$h(n + M/2) = (-1)^k h(-n + M/2)$$

$k = 0$

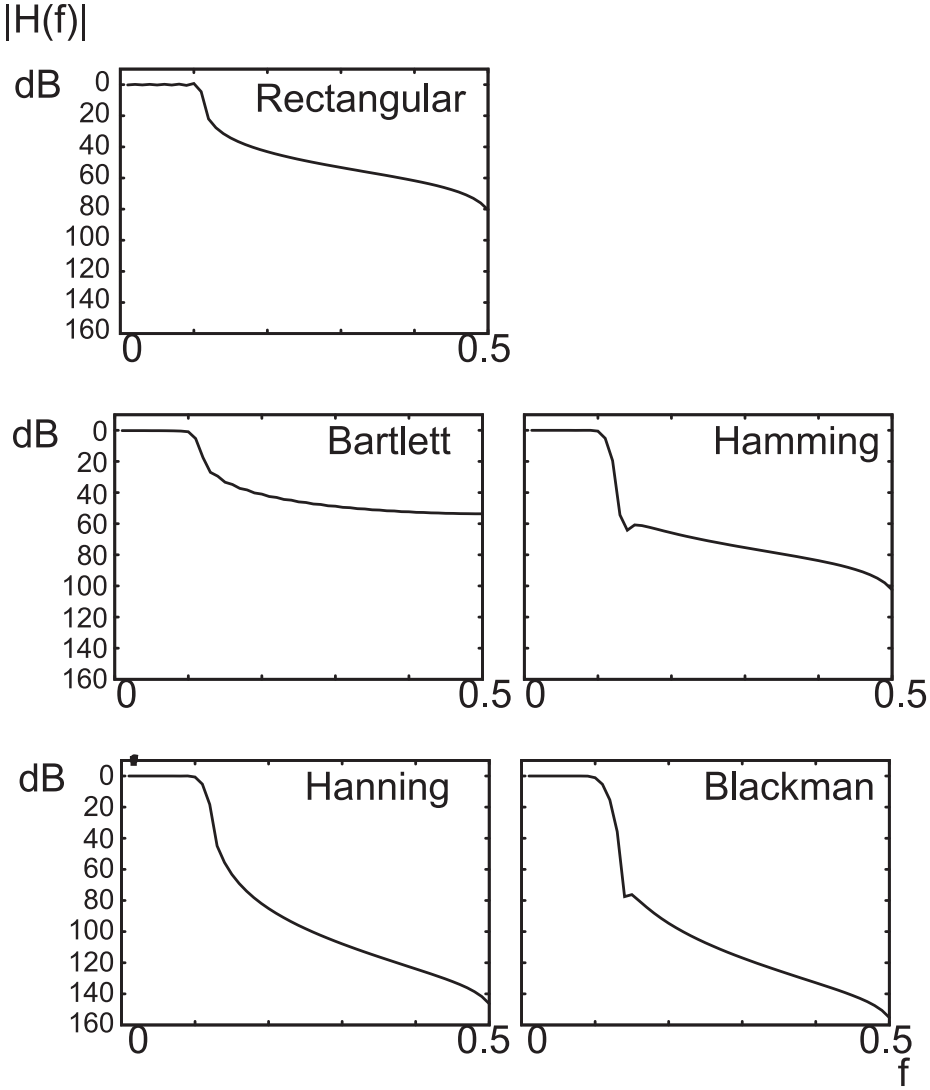
|H(f)|
dB
0
20
40
60
80
100
120
140
160
Rectangular
0
0.5
dB
Bartlett
Hamming
Hanning
Blackman
f

$M/2$

$n > N$

$$H(z)X(z) = \sum_{n=0}^{N} \underbrace{h(nT)w(nT)}\, z^{-n} X(z)$$

$$w(n) = \alpha - (1 - \alpha) \cos\left(\frac{2\pi n}{M}\right)$$

$\alpha = 0.54$

$\alpha = 0.5$

$$w(n) = 0.42 + 0.5\cos\left(\frac{2\pi n}{M}\right) + 0.08\cos\left(\frac{4\pi n}{M}\right)$$

$f_c = 0.1$

$50Hz$

$N/2 = 50$

$500Hz$

5

50

$$|H(e^{j\omega})| = \underbrace{B(e^{j\omega})}_{\text{real}}$$

$$|H(e^{j\omega})| = \begin{cases} 1 & \text{for } |\omega| \leq \omega_c \\ 0 & \text{for } \omega_c < |\omega| \leq \pi \end{cases}$$

$$\frac{1}{2\pi}\int_{-\pi}^{\pi} H(e^{j\omega})e^{j\omega n}d\omega$$

$$\frac{1}{2\pi}\int_{-\omega_c}^{+\omega_c} e^{j\omega n}d\omega$$

$$\frac{1}{2\pi}\left[\frac{1}{jn}e^{j\omega n}\right]_{-\omega_c}^{+\omega_c}$$

$$\frac{1}{2\pi jn}\left(e^{j\omega_c n} - e^{-j\omega_c n}\right)$$

$\sin z$

$$\frac{1}{2j}(e^{zj} - e^{-zj})$$

$\cos z$

$$\frac{1}{2}(e^{zj} + e^{-zj})$$

$$h(n) = \begin{cases} \frac{1}{\pi n} \sin \omega_c n & \text{for } n \neq 0 \\ \frac{\omega_c}{\pi} & \text{for } n = 0 \end{cases}$$

$$\omega_c = 2\pi f_c$$

$$h(n) = \begin{cases} \frac{\omega_c}{\pi} & \text{for } n = 0 \\ \frac{1}{\pi n} \sin(\omega_c n) & \text{for } n \neq 0 \end{cases}$$

$$h(n) = \begin{cases} 1 - \frac{\omega_c}{\pi} & \text{for } n = 0 \\ -\frac{1}{\pi n} \sin(\omega_c n) & \text{for } n \neq 0 \end{cases}$$

$$\omega_{1,2} = 2\pi f_{1,2}$$

$$h(n) = \begin{cases} \frac{\omega_2 - \omega_1}{\pi} & \text{for } n = 0 \\ \frac{1}{\pi n}(\sin(\omega_2 n) - \sin(\omega_1 n)) & \text{for } n \neq 0 \end{cases}$$

$$h(n) = \begin{cases} 1 - \frac{\omega_2 - \omega_1}{\pi} & \text{for } n = 0 \\ \frac{1}{\pi n}(\sin(\omega_1 n) - \sin(\omega_2 n)) & \text{for } n \neq 0 \end{cases}$$

$$e(t) = \int_0^t \underbrace{s(\tau)}_{\text{signal}} \quad \underbrace{r(\tau)}_{\text{template}} \quad d(\tau)$$

$$e(t) = \int_0^\infty s(\tau)h(t-\tau)d\tau$$

$$h(t) := r(T - \tau)$$

$0 \ldots T$

$$\int_0^T s(\tau) r\left(T - (t - \tau)\right) d\tau$$

$$\int_0^T s(\tau)r(T-t+\tau)d\tau$$

$t := T$

$$e(T) = \int_0^\infty s(\tau) r(\tau) d\tau$$

$$\underbrace{h(t) := r(T-t)}_{matched \quad filter!}$$

$$h(t) = e^{-bt}$$

$$H(s) = \frac{1}{s + b}$$

$$h(t) = \sum_{n=0}^{\infty} e^{-bnT} \cdot \delta(t - nT)$$

$$H(s) = \sum_{n=0}^{\infty} e^{-bnT} \underbrace{e^{-nsT}}_{z^{-1}{}^{n}}$$

$H(z)$

$$\sum_{n=0}^{\infty} e^{-bnT} z^{-n}$$

$$\sum_{n=0}^{\infty} \left(e^{-bT} z^{-1} \right)^n$$

$$\frac{1}{1 - e^{-bT} z^{-1}}$$

$$H(s) = \frac{1}{s+b} \qquad \Leftrightarrow \qquad H(z) = \frac{1}{1 - e^{-bT} z^{-1}}$$

$$z_\infty = e^{s_\infty T}$$

$$H(s) = s$$

$$H(z) = 1 - z^{-1} e^{0T} = 1 - z^{-1}$$

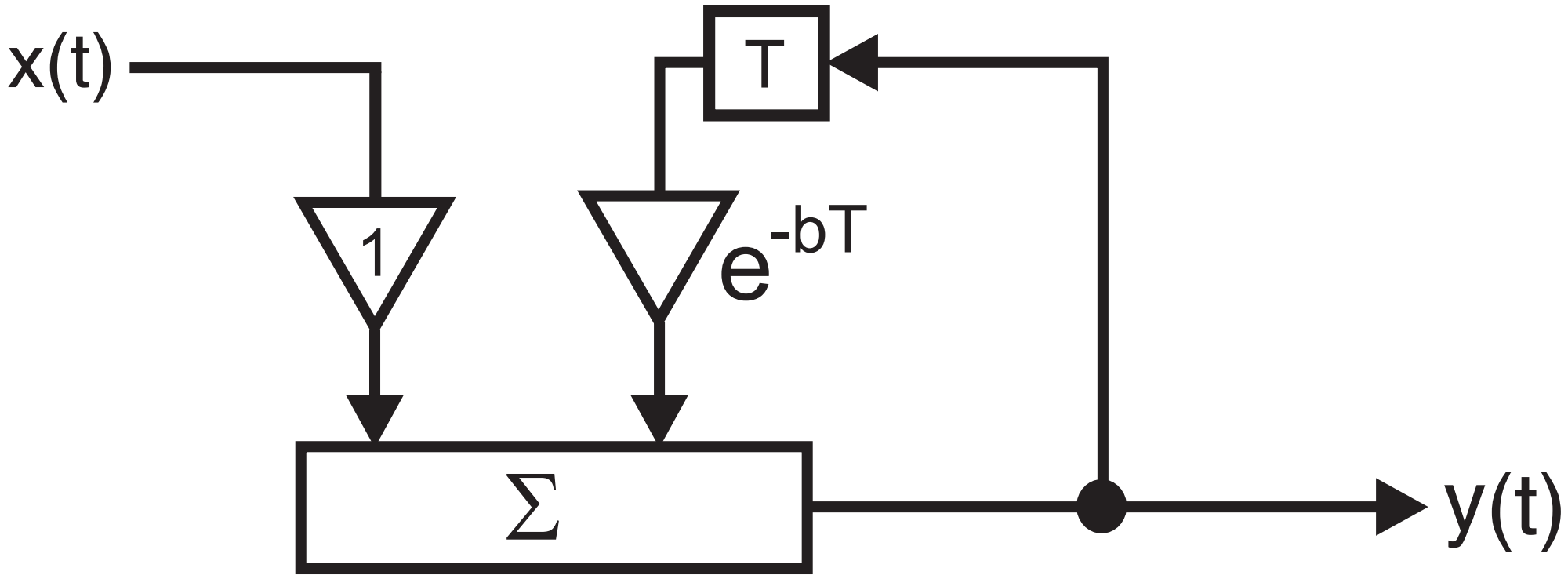
x(t)
T
1
e-bT
Σ
y(t)

$$X(z)H(z)$$

$$X(z)\frac{1}{1-e^{-bT}z^{-1}}$$

$$Y(z)z^{-1}e^{-bT} + X(z)$$

$$y(nT) = y([n-1]T)e^{-bT} + x(nT)$$

$y(nT)$

$y([n-1]T)$

$-e^{-bT}$

$$H(z) = \frac{\sum_{k=0}^{r} B_k z^{-k}}{1 + \sum_{l=1}^{m} A_i z^{-l}}$$

A_l

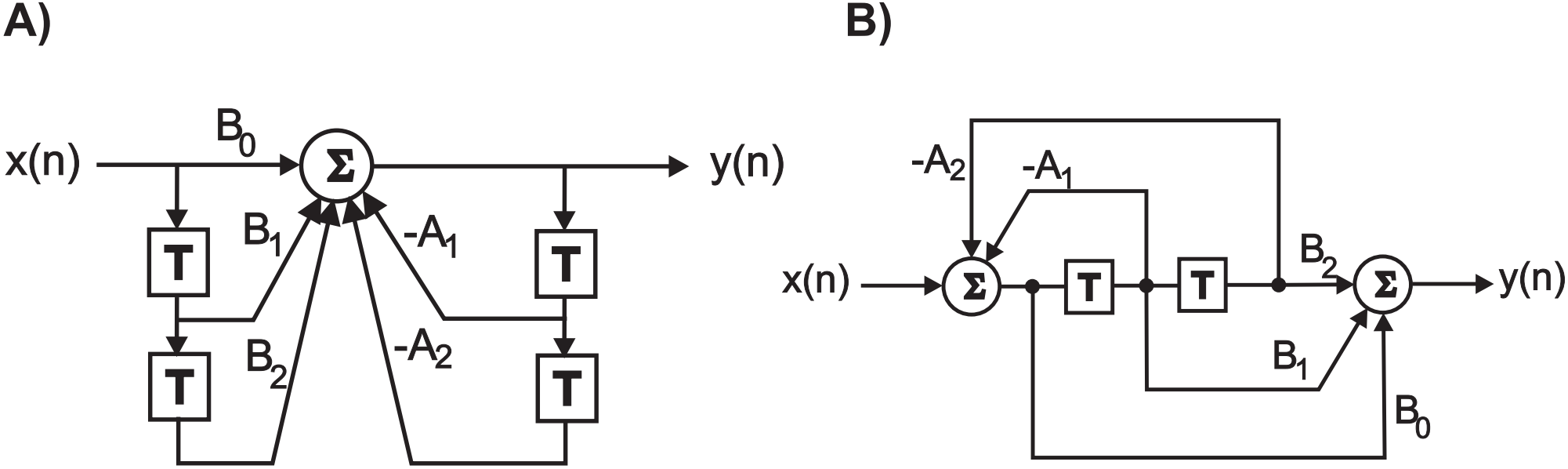
A)
x(n)
B0
Σ
y(n)
T
B1
-A1
T
T
B2
-A2
T
B)
-A2
-A1
x(n)
Σ
T
T
B2
Σ
y(n)
B1
B0

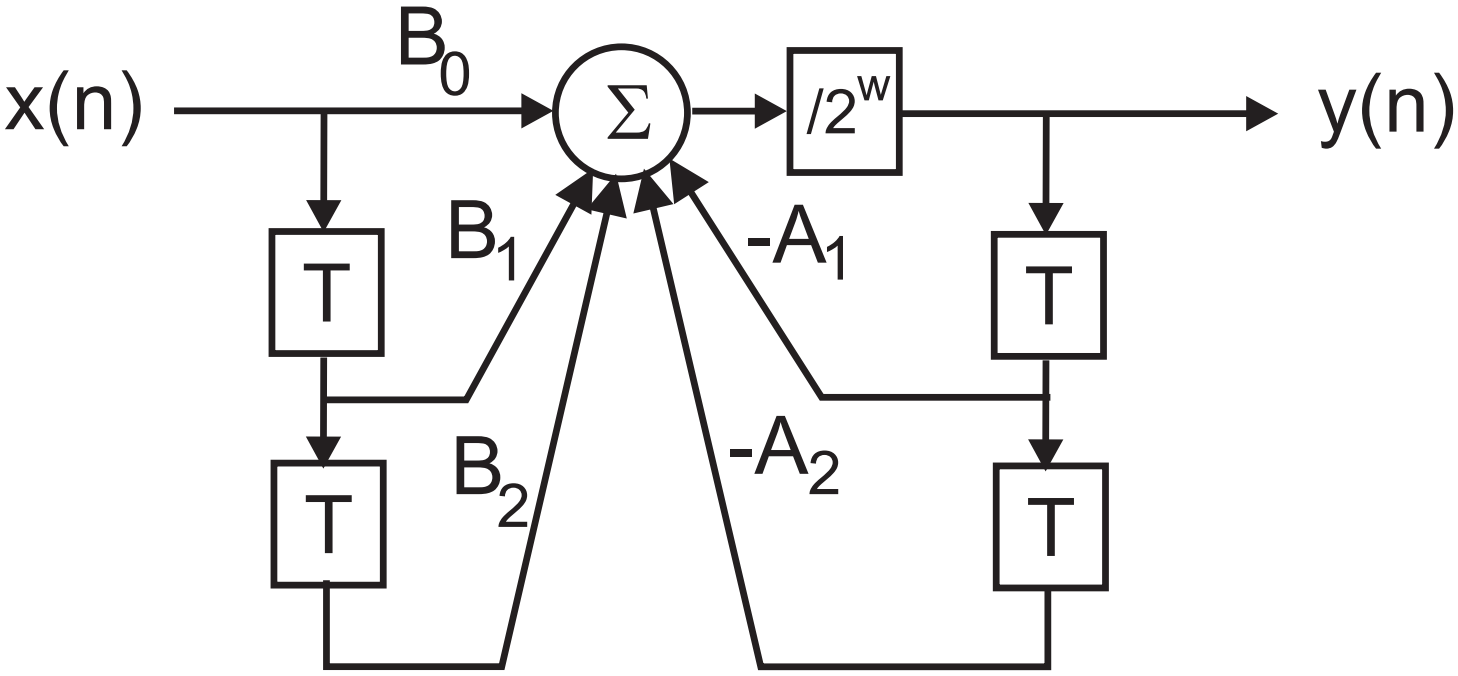
x(n)
B0
Σ
/2w
y(n)
T
T
T
T
B1
B2
-A1
-A2

2^{14}

14

$$16 + 14 = 30$$

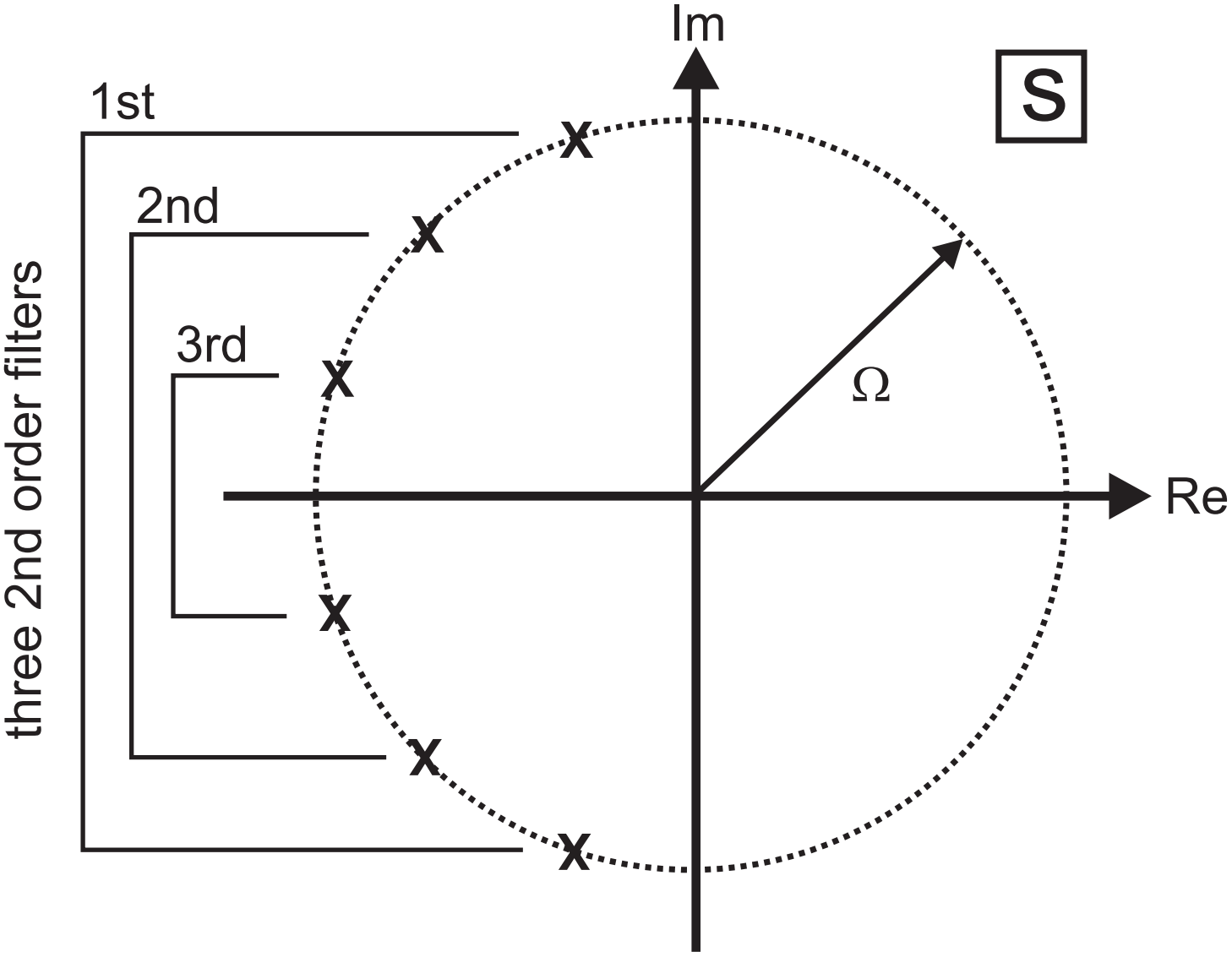
Im
S
1st
2nd
3rd
three 2nd order filters
Ω
Re

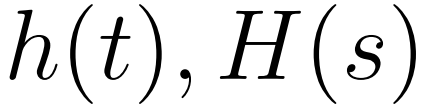

$$|H(\Omega)|^2 = \frac{1}{1 - \varepsilon^2 T_N(\Omega/\Omega_p)}$$

$0 \ldots \infty$

$$-\infty < \Omega < \infty \Rightarrow -\pi \leq \omega \leq \pi$$

$$s = \frac{2}{T} \quad \frac{z-1}{z+1}$$

$$s = j\Omega$$

$$j\Omega = \frac{2}{T}\left[\frac{e^{j\omega}-1}{e^{j\omega}+1}\right] = \frac{2}{T} j \tan\frac{\omega}{2}$$

$$\Omega = \frac{2}{T} tan \frac{\omega}{2}$$

$$\Omega_c = \frac{2}{T} tan \frac{\omega_c}{2}$$

$$\omega_c = 2\pi f_c$$

$$s = \frac{2}{T}\frac{z-1}{z+1}$$

$z^{-1}, z^{-2}, \ldots$

$$H(s) = H_1(s)H_2(s)H_3(s)\ldots$$

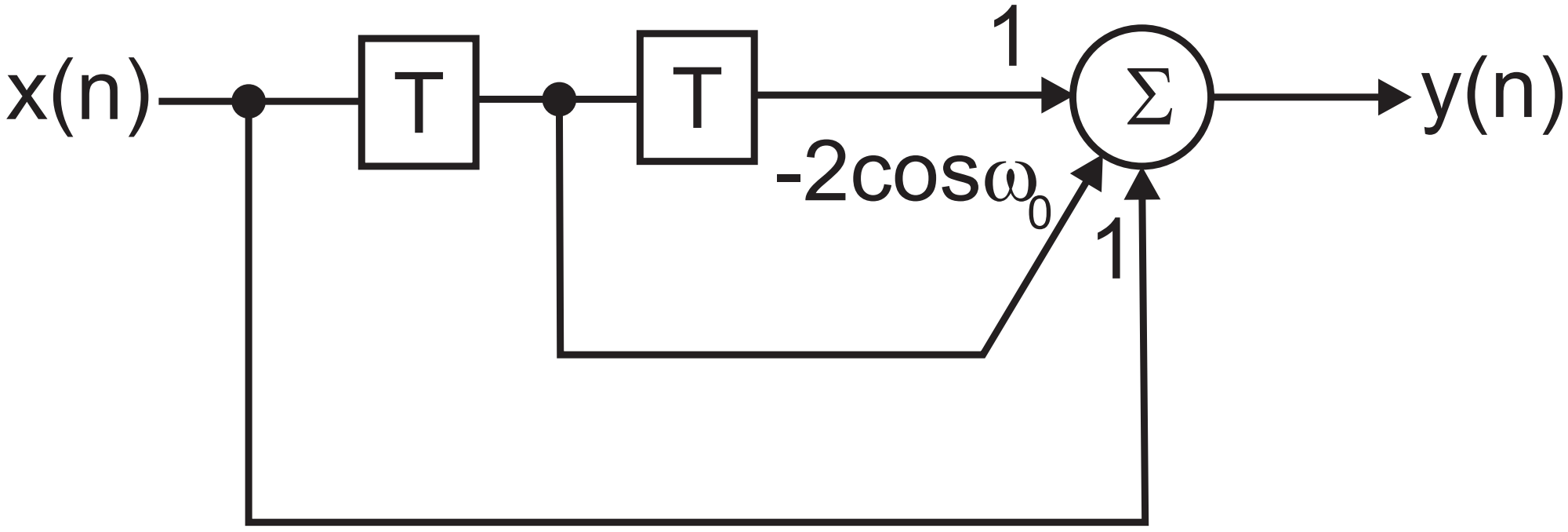
x(n)
T
T
1
Σ
y(n)
-2cosω0
1

$$(1 - e^{j\omega_0} z^{-1})(1 - e^{-j\omega_0} z^{-1})$$

$1 - z^{-1} e^{j\omega - 0} + z^{-2}$

$$1 - z^{-1}\left(e^{j\omega_0} + e^{-j\omega_0}\right) + z^{-2}$$

$$1 - z^{-1} 2 \cos \omega_0 + z^{-2}$$

$$H(e^{j\omega}) = \underbrace{(1 - e^{j\omega_0}e^{-j\omega})(1 - e^{-j\omega_0}e^{-j\omega})}_{2 \text{ zeros}}$$

$e^{-j\omega_0}$

$\omega_0 = 0$

$$(1 - e^0 z^{-1})(1 - e^0 z^{-1})$$

$1 - 2z^{-1} + z^{-2}$

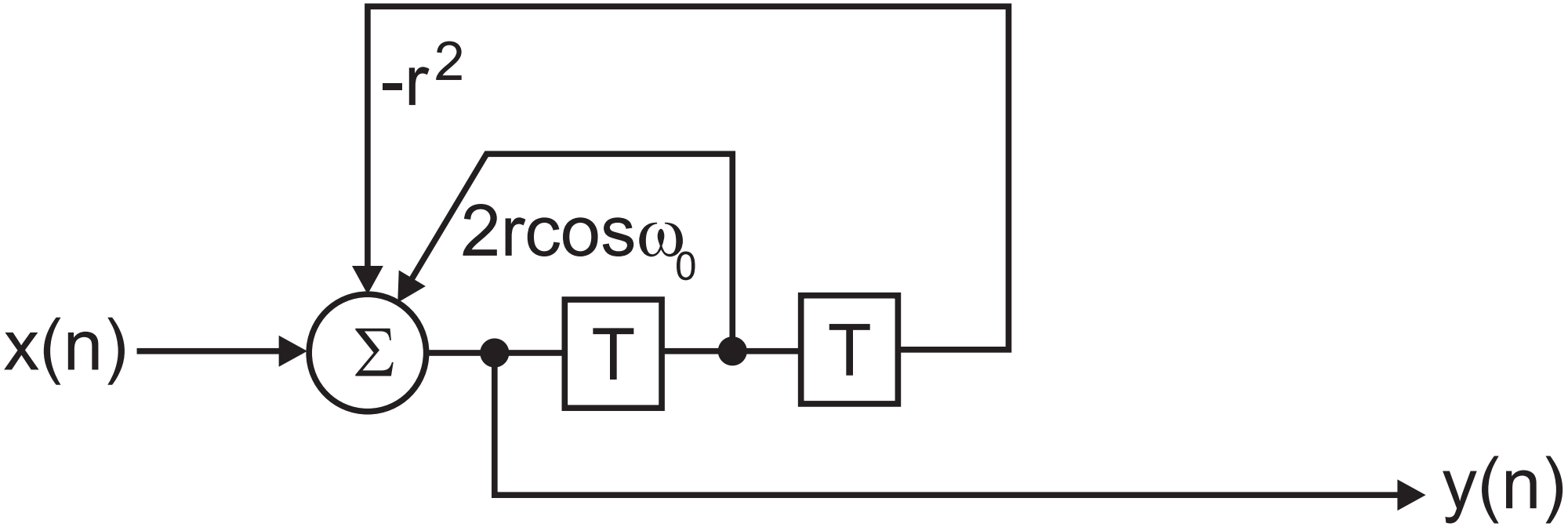
-r2
2rcosω0
x(n)
Σ
T
T
y(n)

$$H(z) = \underbrace{\frac{1}{(1 - re^{j\omega_0} z^{-1})(1 - re^{-j\omega_0} z^{-1})}}_{2poles!}$$

$0 < r < 1$

$$H(z) = \frac{1}{1 - 2r\cos(\omega_0)z^{-1} + r^2 z^{-2}}$$

$$X(z)\frac{1}{1-2r\cos(\omega)z^{-1}+r^2z^{-2}}$$

$$Y(z) - Y(z)2r\cos(\omega_0)z^{-1} + Y(z)r^2z^{-2}$$

$$X(z) + z^{-1}Y(z)2r\cos(\omega_0) - z^{-2}Y(z)r^2$$

$r > 1$

$-1 \ldots +1$

$$H(z) = \frac{1 - 2\cos(\omega_0)z^{-1} + z^{-2}}{1 - 2r\cos(\omega_0)z^{-1} + r^2 z^{-2}}$$

$r < 1$

$$H(z) = \frac{b}{1 - az^{-1}}$$

a

$$|H(e^{j\omega})| = |\frac{b}{1 - ae^{-j\omega}}|$$

$$\underbrace{y(n)}_{\text{actual estimate}} = a(n) \underbrace{y(n-1)}_{\text{previous estimate}} + b(n) \underbrace{x(n)}_{\text{current data sample}}$$

$y(n)$

$$p(n) = E[(y(k) - y_{real}(k))^2]$$

p