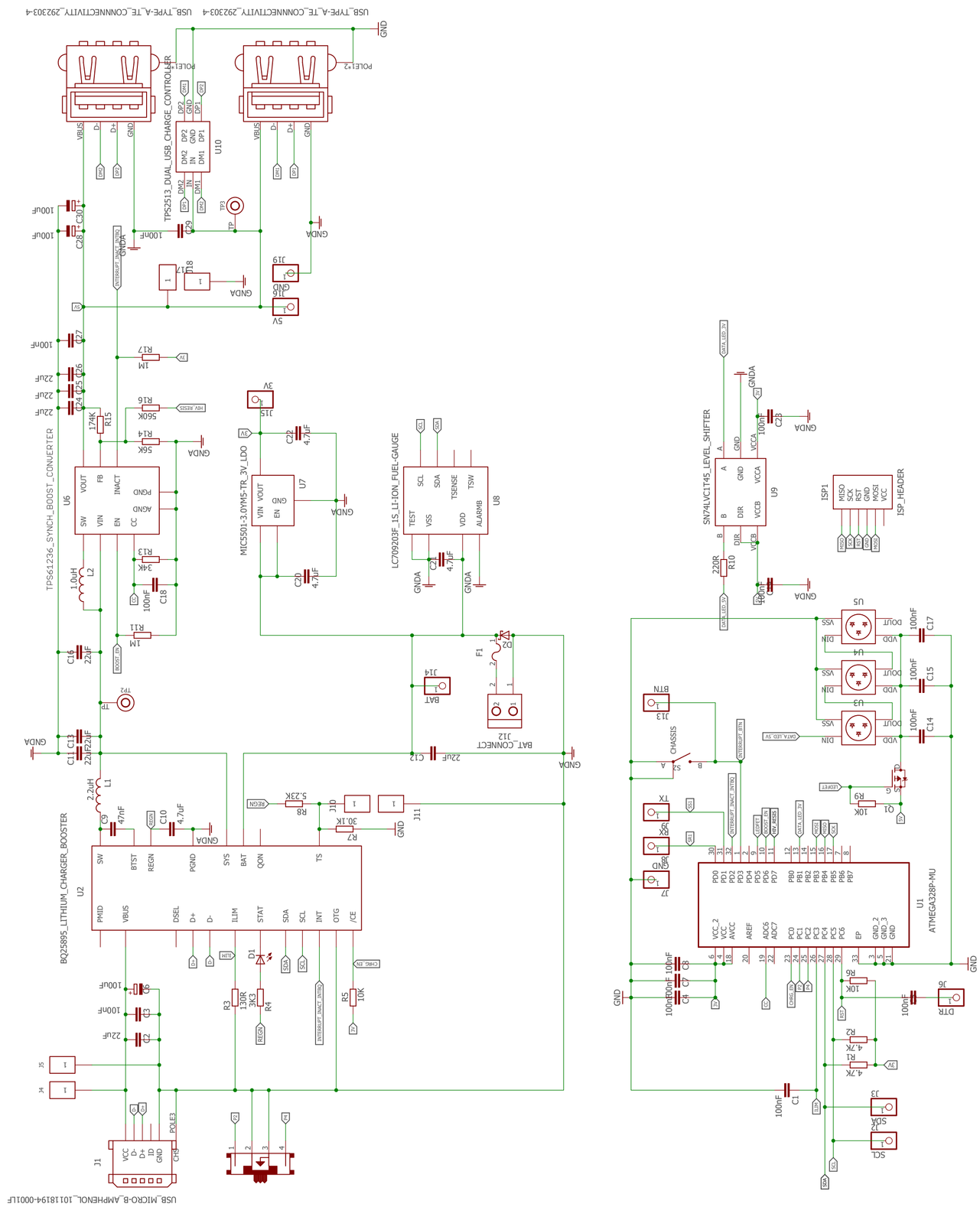
USB_TYPE-A_TE_CONNECTIVITY_292303-4
USB_TYPE-A_TE_CONNECTIVITY_292303-4
TPS2513_DUAL_USB_CHARGE_CONTROLLER
U10
TPS61236_SYNCH_BOOST_CONVERTER
U6
BQ25895_LITHIUM_CHARGER_BOOSTER
U2
MICS501-3.0YM5-TR_3V_LDO
U7
LC709203F_1S_LI-ION_FUEL-GAUGE
U8
SN74LVC1T45_LEVEL_SHIFTER
U9
ISP_HEADER
ISP1
ATMEGA328P-MU
U1
BAT_CONNECT
J12
USB_MICRO-B_AMPHENOL_10118194-0001LF
J1
GND
GNDA
5V
3V