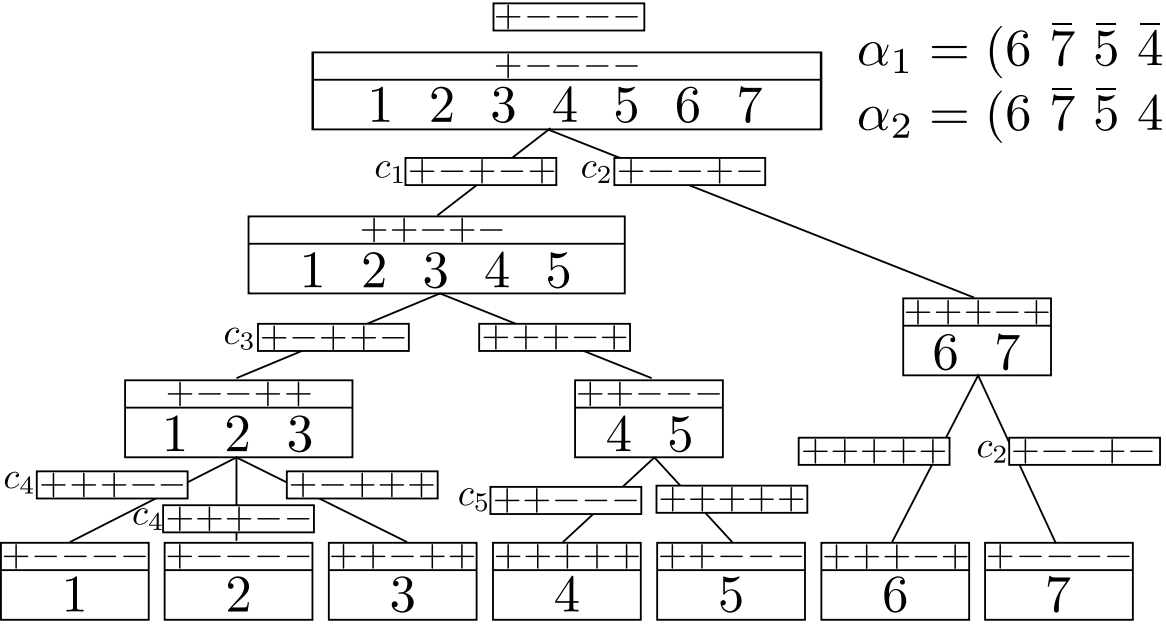
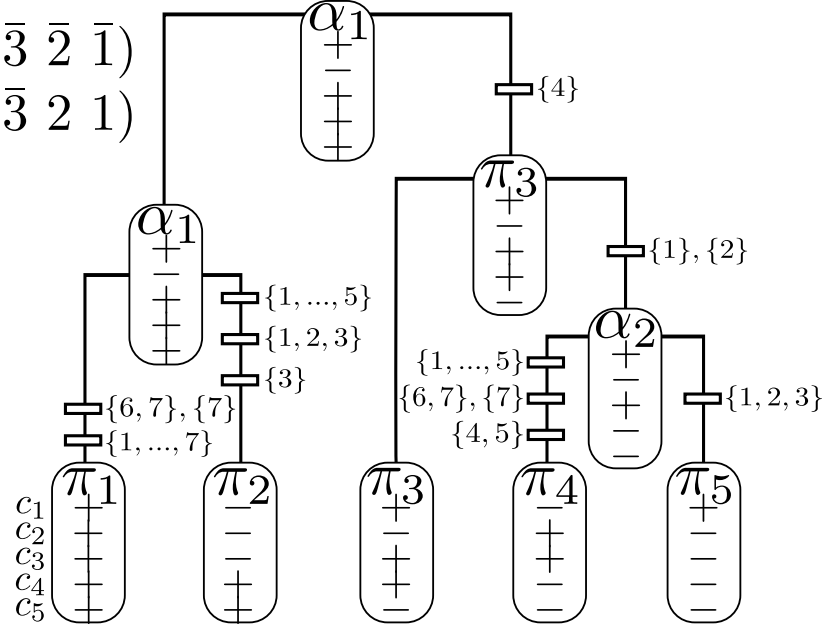
$$\alpha_1 = (6\ \bar{7}\ \bar{5}\ \bar{4}\ \bar{3}\ \bar{2}\ \bar{1})$$
$$\alpha_2 = (6\ \bar{7}\ \bar{5}\ 4\ \bar{3}\ 2\ 1)$$