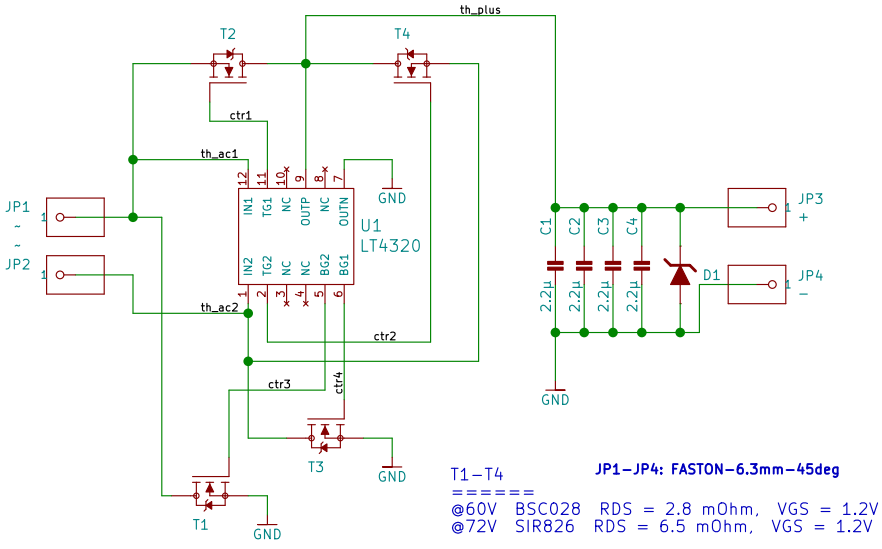

Title: Active Rectifier with LT4320 v1.0 2018−01−07
Author: Bernhard Schneider <bernhard@neaptide.org>
License: CERN Open Hardware Licence v1.2

Sheet: /
File: ideal−rectifier−lt4320.sch

Title:

Size: User	Date:	**Rev:**
KiCad E.D.A. kicad (2018−01−03 revision bf44d394c)−HEAD		Id: 1/1