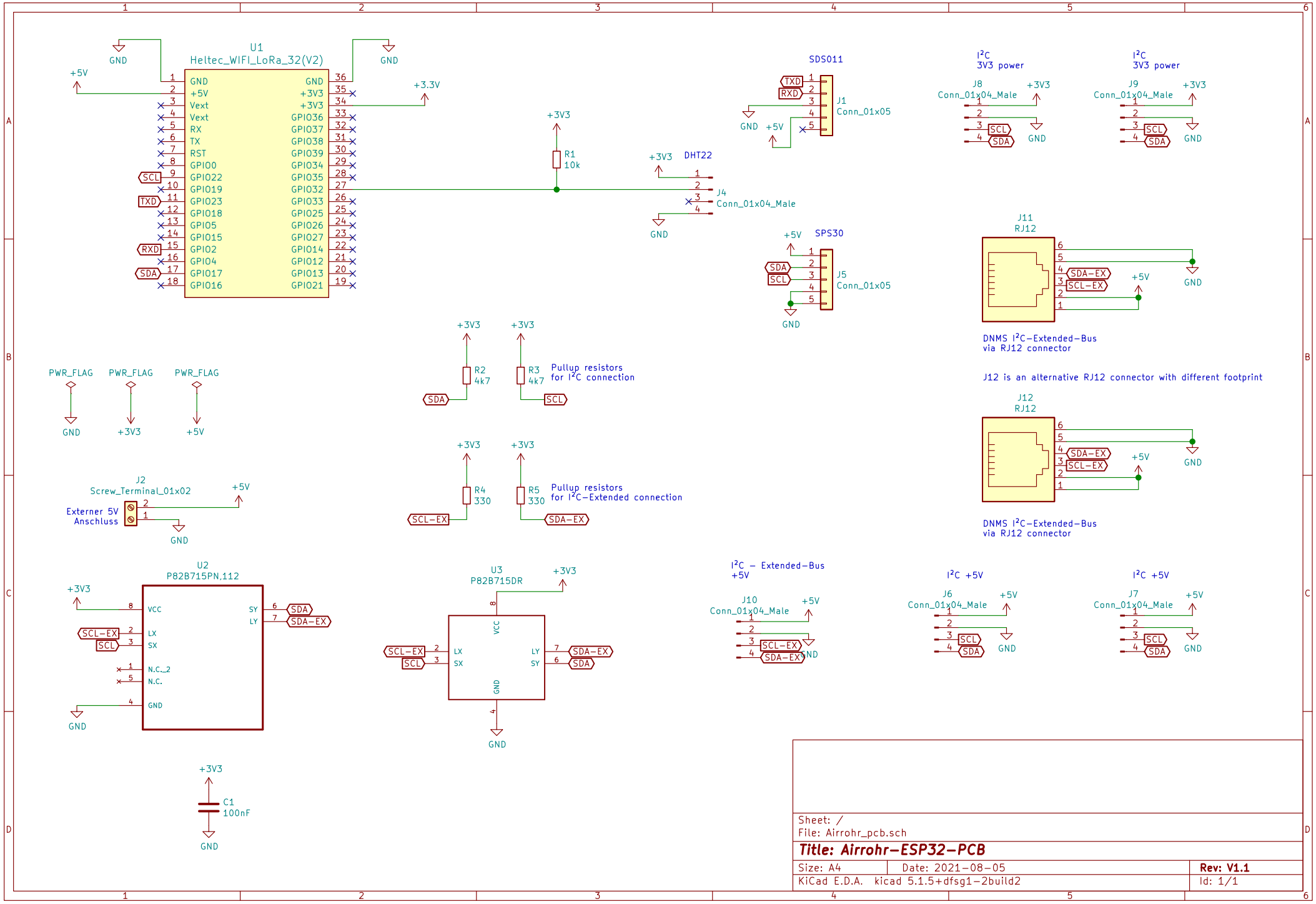

Sheet: /
File: Airrohr_pcb.sch

Title: Airrohr-ESP32-PCB

Size: A4	Date: 2021-08-05	Rev: V1.1
KiCad E.D.A. kicad 5.1.5+dfsg1-2build2		Id: 1/1