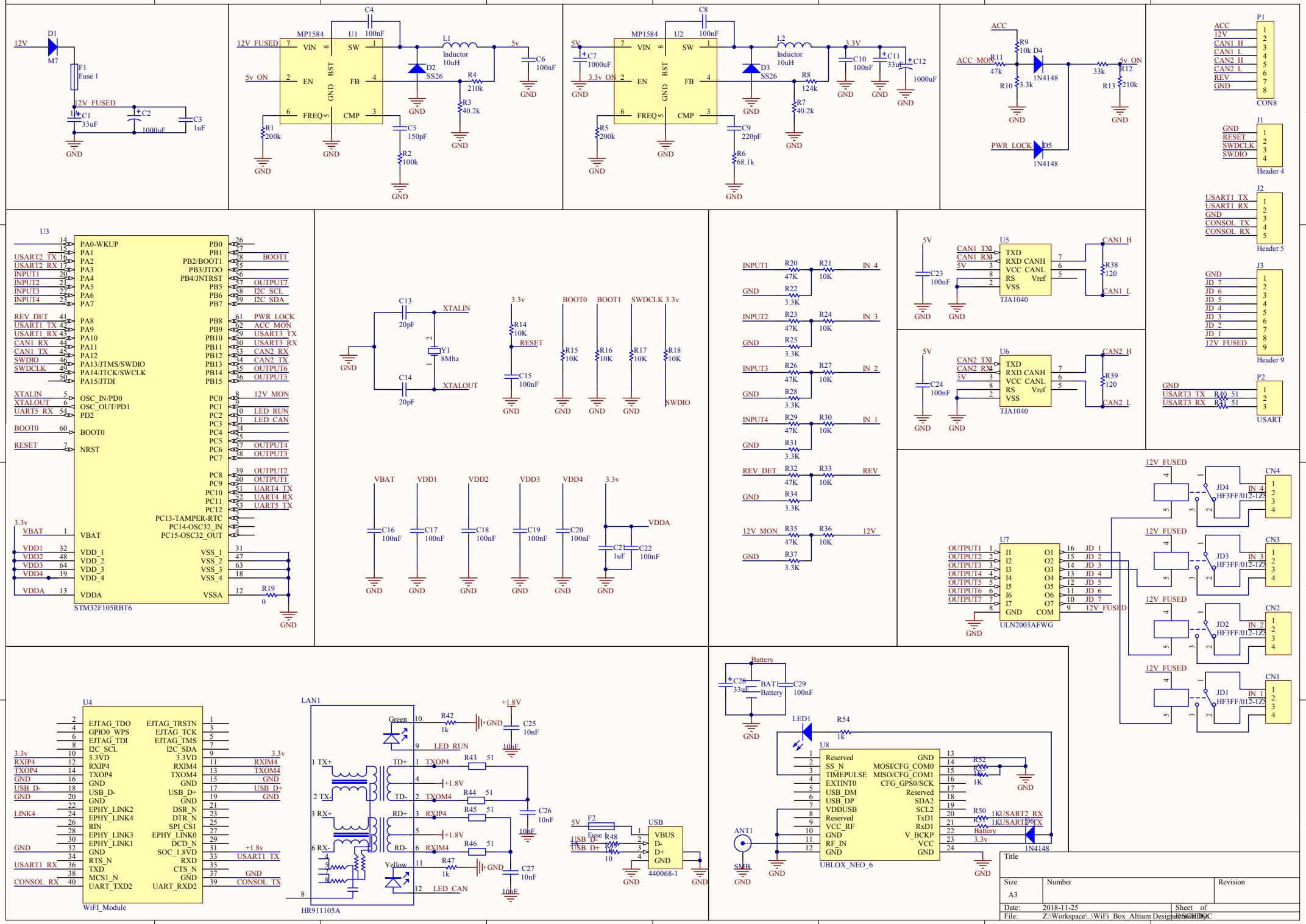
12V
D1
M7
F1
Fuse 1
12V_FUSED
C1
33uF
C2
1000uF
C3
1uF
GND
MP1584
U1
C4
100nF
12V_FUSED
VIN
SW
L1
Inductor
10uH
5v
C6
100nF
5v_ON
EN
FB
D2
SS26
R4
210k
R3
40.2k
FREQ
CMP
R1
200k
C5
150pF
R2
100k
U2
C8
100nF
5V
C7
1000uF
3.3v_ON
L2
Inductor
10uH
3.3V
C10
100nF
C11
33uF
C12
1000uF
D3
SS26
R8
124k
R7
40.2k
R5
200k
C9
220pF
R6
68.1k
ACC
R9
10k
D4
ACC_MON
R11
47k
1N4148
33k
5v_ON
R12
R10
3.3k
R13
210k
PWR_LOCK
D5
1N4148
P1
ACC
12V
CAN1_H
CAN1_L
CAN2_H
CAN2_L
REV
GND
CON8
J1
GND
RESET
SWDCLK
SWDIO
Header 4
J2
USART1_TX
USART1_RX
GND
CONSOL_TX
CONSOL_RX
Header 5
J3
GND
JD_7
JD_6
JD_5
JD_4
JD_3
JD_2
JD_1
12V_FUSED
Header 9
P2
GND
USART3_TX
USART3_RX
R40
51
R41
51
USART
U3
PA0-WKUP
PA1
PA2
PA3
PA4
PA5
PA6
PA7
PA8
PA9
PA10
PA11
PA12
PA13/JTMS/SWDIO
PA14/JTCK/SWCLK
PA15/JTDI
OSC_IN/PD0
OSC_OUT/PD1
PD2
BOOT0
NRST
VBAT
VDD_1
VDD_2
VDD_3
VDD_4
VDDA
PB0
PB1
PB2/BOOT1
PB3/JTDO
PB4/JNTRST
PB5
PB6
PB7
PB8
PB9
PB10
PB11
PB12
PB13
PB14
PB15
PC0
PC1
PC2
PC3
PC4
PC5
PC6
PC7
PC8
PC9
PC10
PC11
PC12
PC13-TAMPER-RTC
PC14-OSC32_IN
PC15-OSC32_OUT
VSS_1
VSS_2
VSS_3
VSS_4
VSSA
R19
0
STM32F105RBT6
USART2_TX
USART2_RX
INPUT1
INPUT2
INPUT3
INPUT4
REV_DET
USART1_TX
USART1_RX
CAN1_RX
CAN1_TX
SWDIO
SWDCLK
XTALIN
XTALOUT
UART5_RX
BOOT0
RESET
3.3v
BOOT1
OUTPUT7
I2C_SCL
I2C_SDA
PWR_LOCK
ACC_MON
USART3_TX
USART3_RX
CAN2_RX
CAN2_TX
OUTPUT6
OUTPUT5
12V_MON
LED_RUN
LED_CAN
OUTPUT4
OUTPUT3
OUTPUT2
OUTPUT1
UART4_TX
UART4_RX
UART5_TX
C13
20pF
C14
20pF
Y1
8Mhz
R14
10K
C15
100nF
R15
10K
R16
10K
R17
10K
R18
10K
VBAT
VDD1
VDD2
VDD3
VDD4
C16
100nF
C17
100nF
C18
100nF
C19
100nF
C20
100nF
VDDA
C21
1uF
C22
100nF
R20
47K
R21
10K
IN_4
R22
3.3K
R23
47K
R24
10K
IN_3
R25
3.3K
R26
47K
R27
10K
IN_2
R28
3.3K
R29
47K
R30
10K
IN_1
R31
3.3K
R32
47K
R33
10K
REV
R34
3.3K
R35
47K
R36
10K
12V
R37
3.3K
U5
TXD
RXD
CANH
VCC
CANL
RS
Vref
VSS
TJA1040
CAN1_TX
CAN1_RX
C23
100nF
R38
120
U6
CAN2_TX
CAN2_RX
C24
100nF
R39
120
U7
I1
I2
I3
I4
I5
I6
I7
GND
O1
O2
O3
O4
O5
O6
O7
COM
ULN2003AFWG
OUTPUT1
OUTPUT2
OUTPUT3
OUTPUT4
OUTPUT5
OUTPUT6
OUTPUT7
JD_1
JD_2
JD_3
JD_4
JD_5
JD_6
JD_7
CN4
CN3
CN2
CN1
JD4
JD3
JD2
JD1
HF3FF/012-1ZS
U4
EJTAG_TDO
GPIO0_WPS
EJTAG_TDI
I2C_SCL
3.3VD
RXIP4
TXOP4
GND
USB_D-
EPHY_LINK2
EPHY_LINK4
RIN
EPHY_LINK3
EPHY_LINK1
RTS_N
TXD
MCS1_N
UART_TXD2
EJTAG_TRSTN
EJTAG_TCK
EJTAG_TMS
I2C_SDA
RXIM4
TXOM4
USB_D+
DSR_N
DTR_N
SPI_CS1
EPHY_LINK0
DCD_N
SOC_1.8VD
RXD
CTS_N
UART_RXD2
WiFI_Module
LINK4
USART1_TX
CONSOL_TX
LAN1
HR911105A
Green
Yellow
R42
1k
C25
10nF
LED_RUN
TX+
TX-
RX+
RX-
TD+
TD-
RD+
RD-
TXOP4
TXOM4
RXIP4
RXIM4
R43
51
R44
51
R45
51
R46
51
R47
1k
C26
10nF
C27
10nF
LED_CAN
+1.8V
F2
Fuse
USB_D-
USB_D+
R48
10
USB
VBUS
D-
D+
440068-1
Battery
C28
33uF
BAT1
C29
100nF
LED1
R54
1k
U8
Reserved
SS_N
TIMEPULSE
EXTINT0
USB_DM
USB_DP
VDDUSB
VCC_RF
RF_IN
MOSI/CFG_COM0
MISO/CFG_COM1
CFG_GPS0/SCK
SCL2
SDA2
TxD1
RxD1
V_BCKP
VCC
R52
1K
R50
1K
R51
1K
USART2_RX
USART2_TX
ANT1
SMB
UBLOX_NEO_6
1N4148
Title
Size
A3
Number
Revision
Date: 2018-11-25
Sheet of
File: Z:\Workspace\..\WiFi_Box_Altium Designer\WiFi.PcbDoc