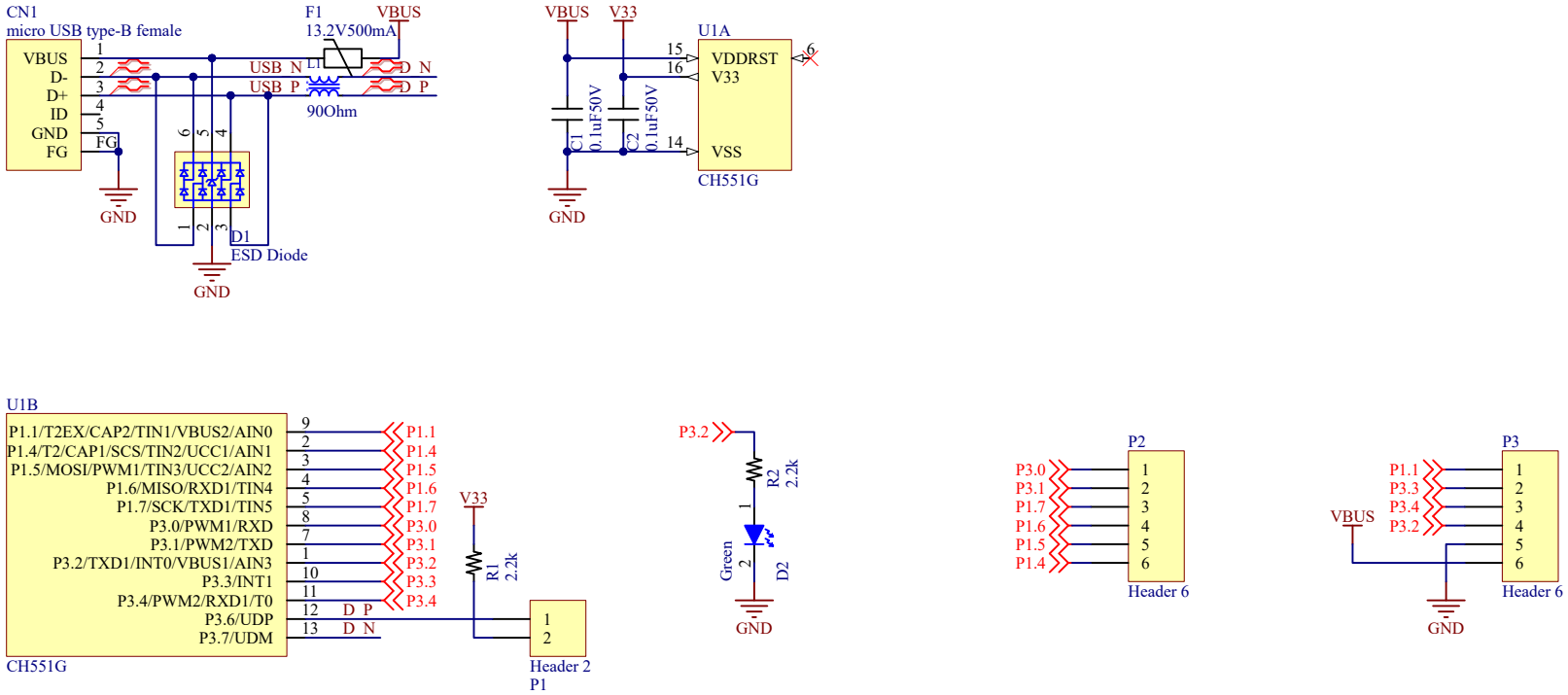

Short to launch bootloader

Title	CH551 Breakout Board	
Model	for 技術書典6	Rev. 1.0
Comment	LED Driver	
Filename	CH551G_BB.SchDoc	
Size A4	Date 2019/04/11	mimcap @ みらい工房
	Design T Maruyama	
	Sheet 1 of 1	