Fix on next revision
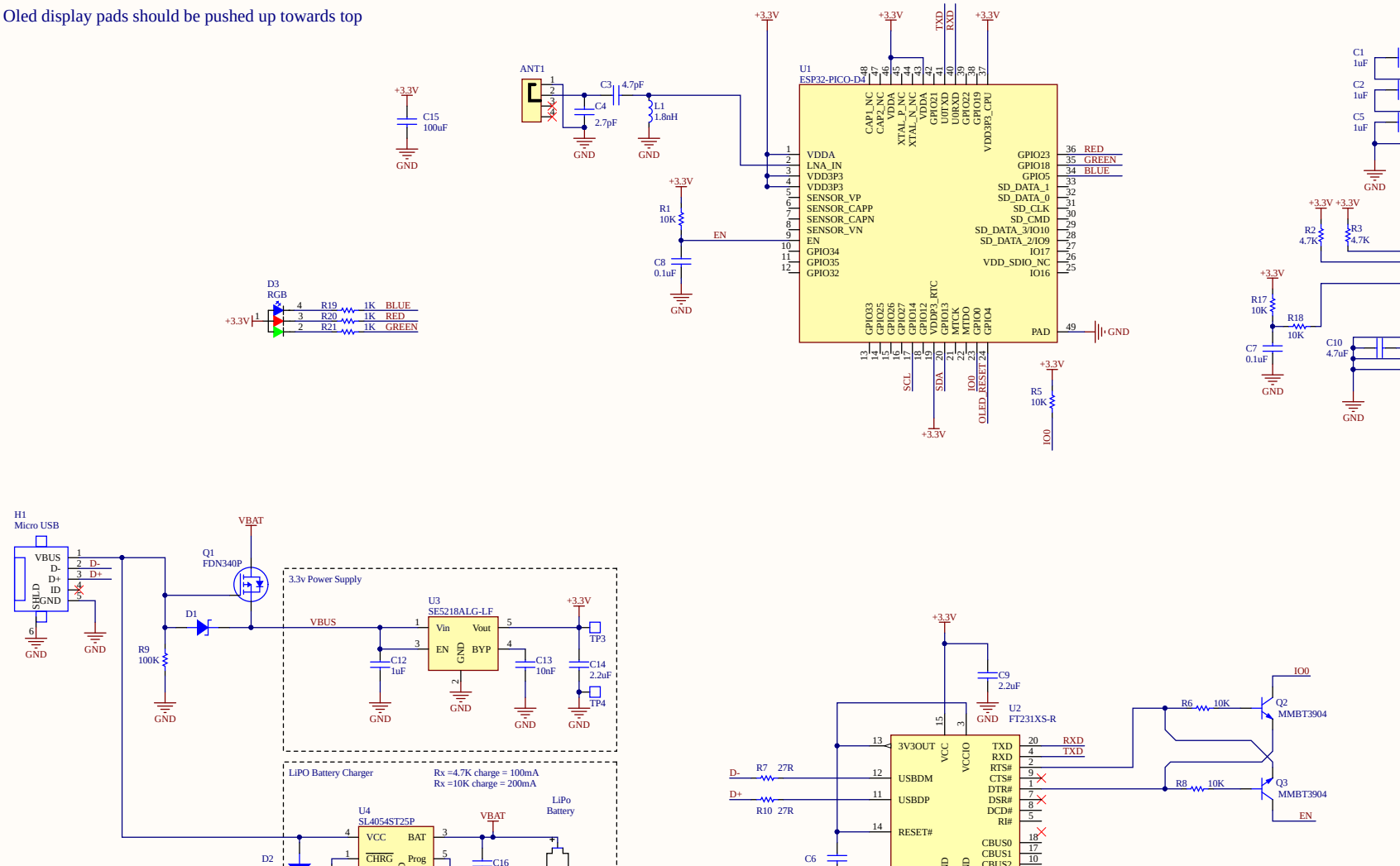
- RGB LED footpring wrong
- Oled display pads should be pushed up towards top