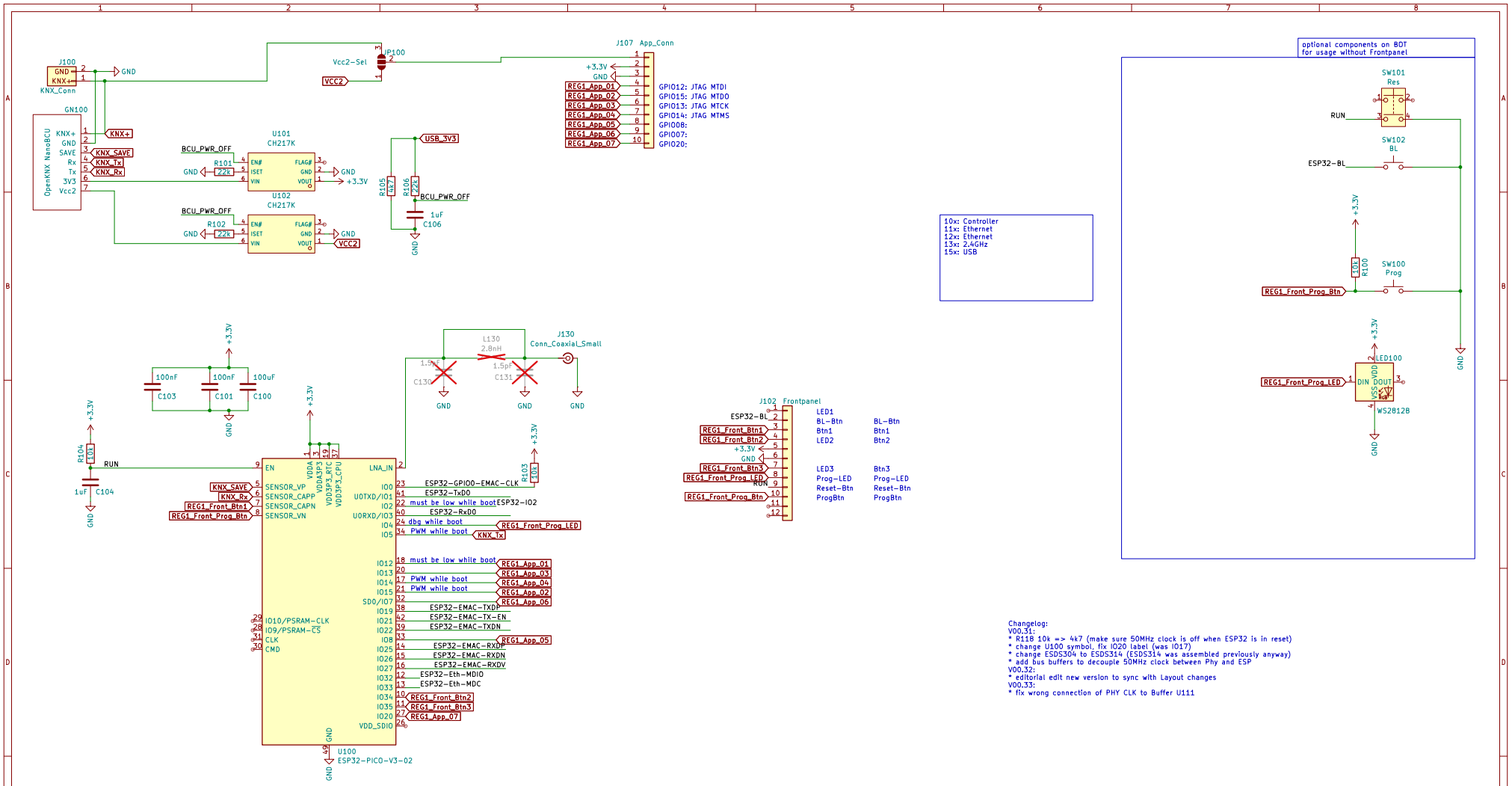

Changelog:
V00.31:
* R118 10k => 4k7 (make sure 50MHz clock is off when ESP32 is in reset)
* change U100 symbol, fix IO20 label (was IO17)
* change ESDS304 to ESDS314 (ESDS314 was assembled previously anyway)
* add bus buffers to decouple 50MHz clock between Phy and ESP
V00.32:
* editorial edit new version to sync with Layout changes
V00.33:
* fix wrong connection of PHY CLK to Buffer U111

https://ing-dom.de

by Ing-Dom <dom@ing-dom.de>

PCB / Layout vs. Schematic Versioning:
Schematics are versioned with Vxx.yy (e.g. V01.02).
Layouts are versioned with a matching Vxx.yy and an optional letter indicating a layout change without impact on the schematic (V01.02, V01.02a, V10.02b).

Sheet: /
File: REG1-ControllerESP.kicad_sch

Title: REG1-ControllerESP

Size: A3	Date: 2026-07-26	Rev: V00.33
KiCad E.D.A. 9.0.6		Id: 1/3

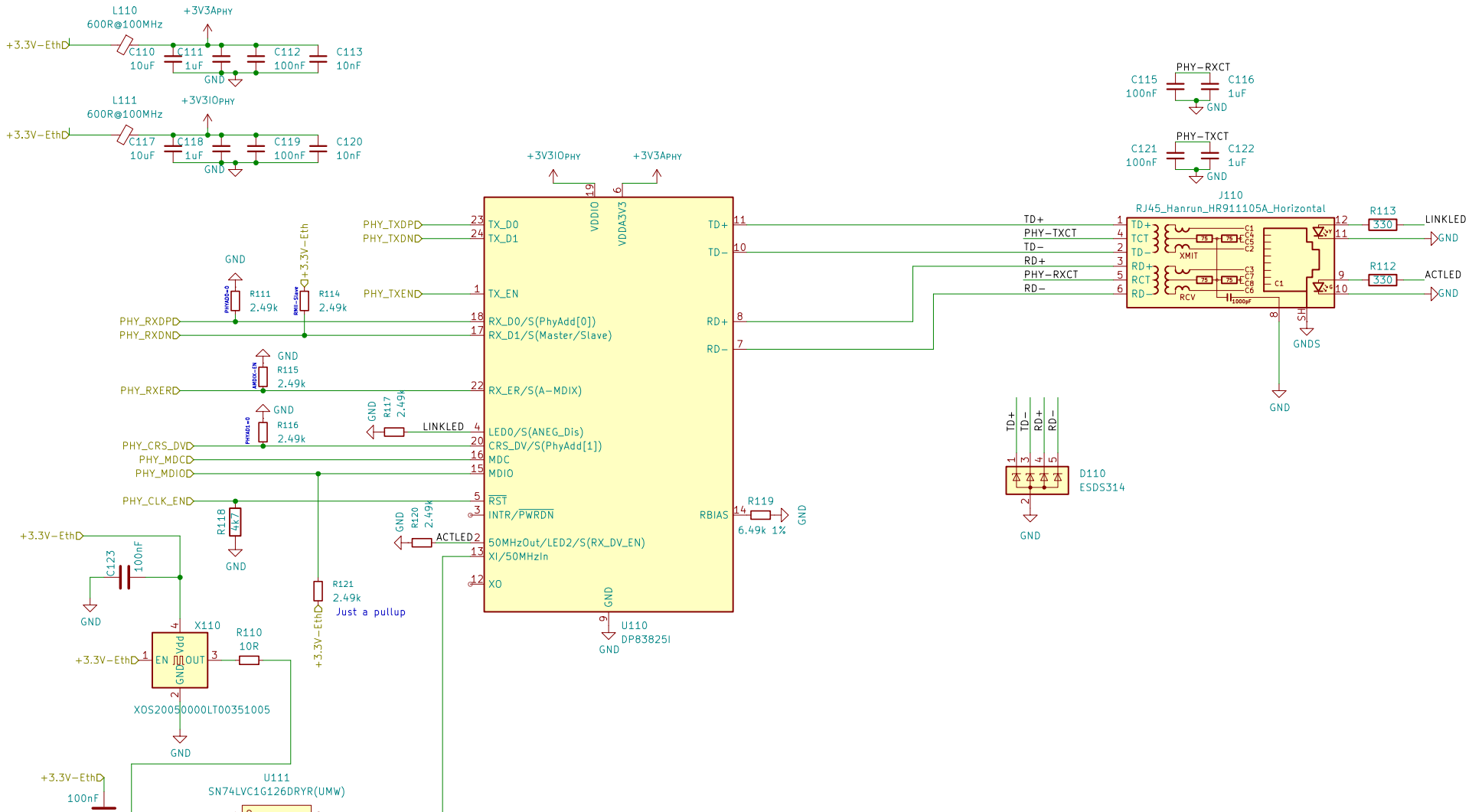

https://ing-dom.de

by Ing-Dom <dom@ing-dom.de>

Sheet: /Ethernet/
File: Ethernet.kicad_sch

Title: REG1-ControllerESP

Size: A4	Date: 2026-07-26	**Rev: V00.33**
KiCad E.D.A. 9.0.6		Id: 3/3

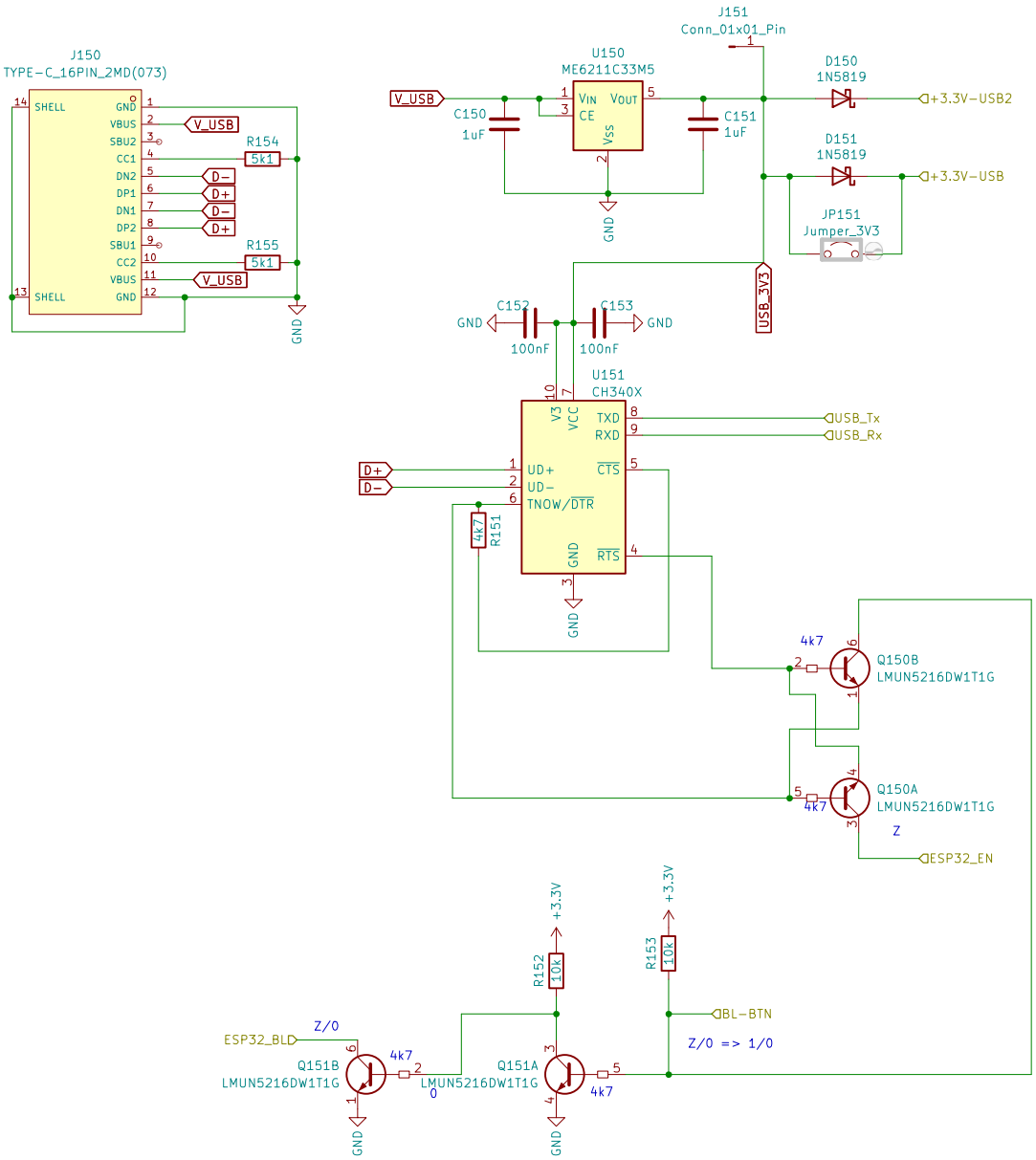

https://ing-dom.de

by Ing-Dom <dom@ing-dom.de>

Sheet: /ESP32_USB/
File: ESP32_USB.kicad_sch

Title: REG1-ControllerESP

Size: A4	Date: 2026-07-26	**Rev: V00.33**
KiCad E.D.A. 9.0.6		Id: 4/3