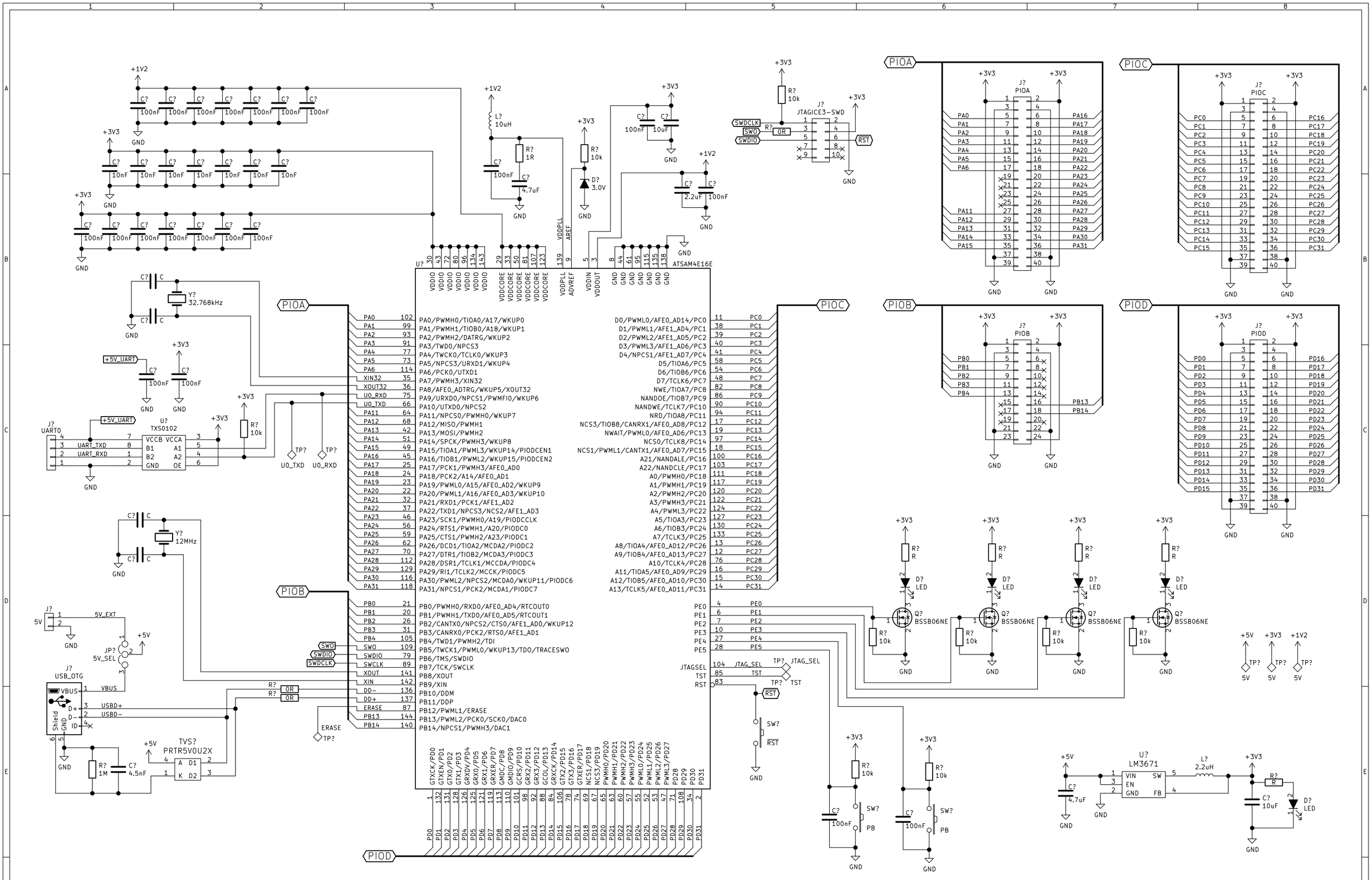

Sheet: /
File: Processor.sch

Title: PROCESSOR

Size: A3	Date: 2017-02-13	Rev: – DRAFT
KiCad E.D.A. kicad (2017-02-08 revision 0dc1193)-makepkg		Id: 1/1