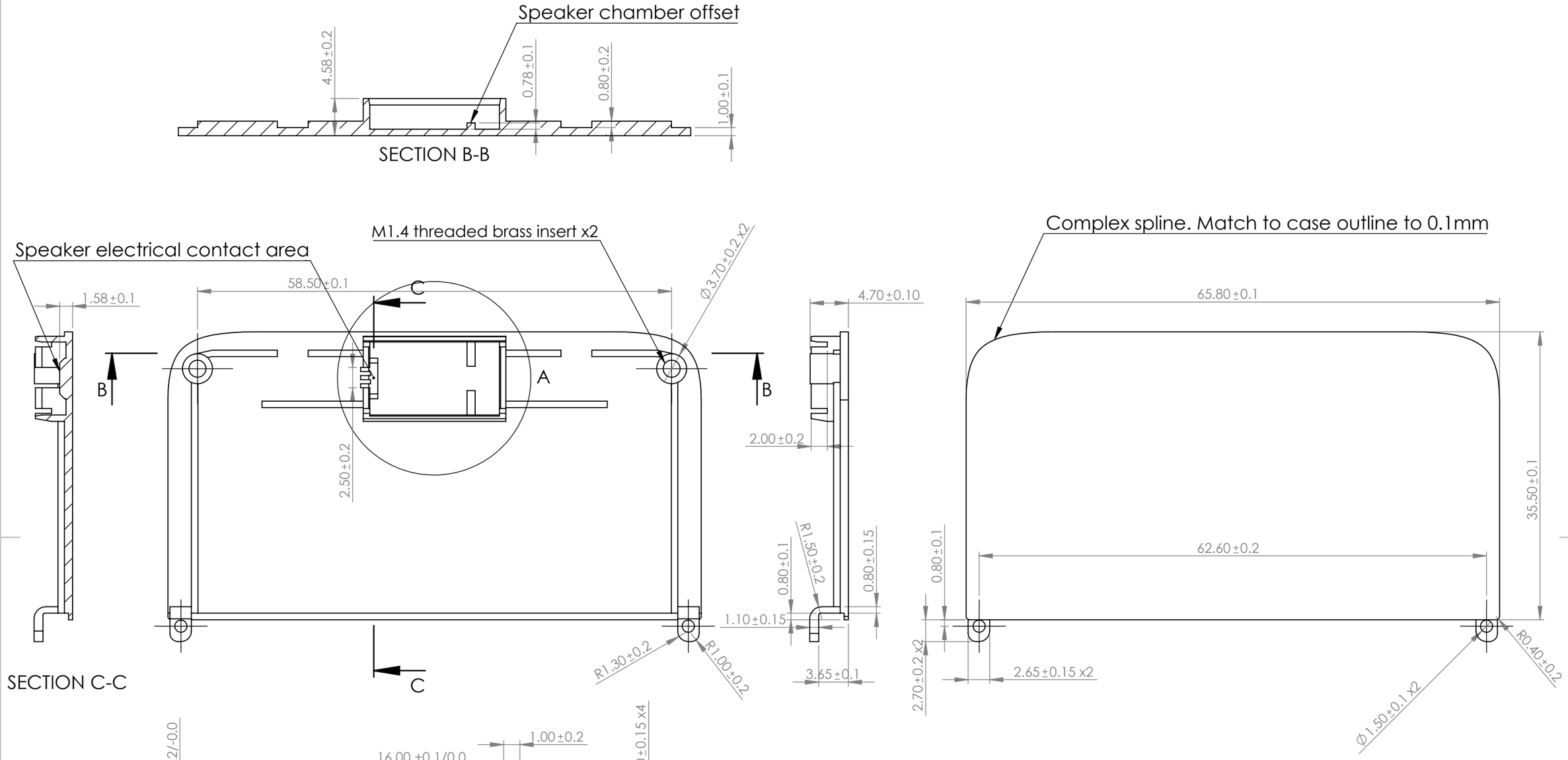

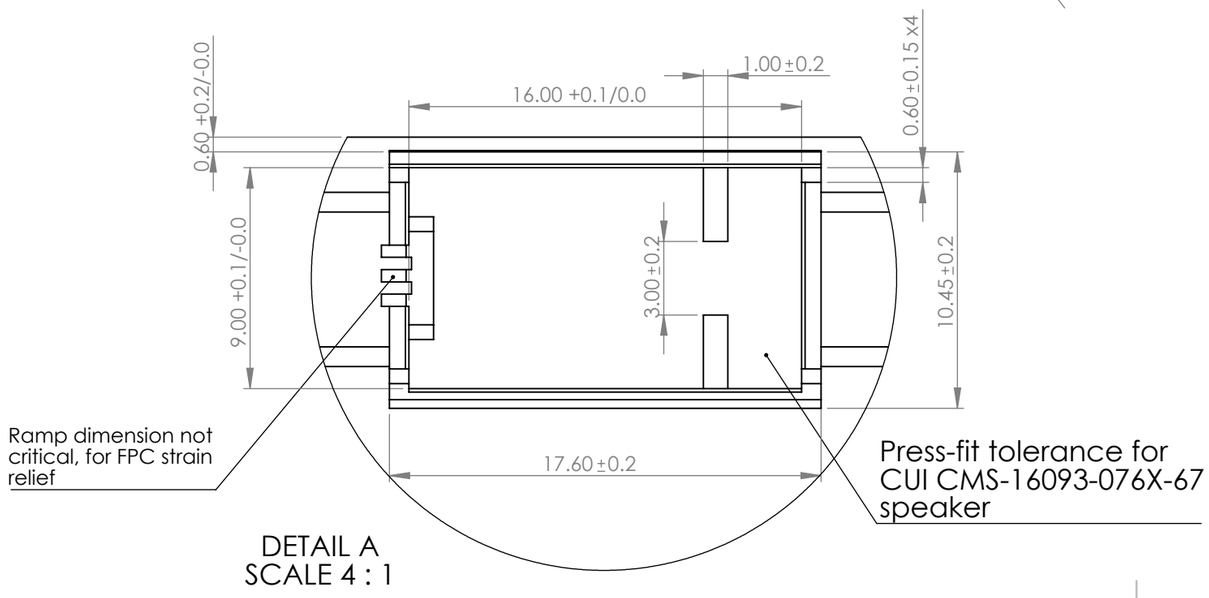

DETAIL A
SCALE 4 : 1

UNLESS OTHERWISE SPECIFIED: DIMENSIONS ARE IN MILLIMETERS SURFACE FINISH: fine satin TOLERANCES: LINEAR: 0.1mm ANGULAR: 1 deg	FINISH: Fine Satin Finish			DEBURR AND BREAK SHARP EDGES	DO NOT SCALE DRAWING	REVISION 1
	NAME	SIGNATURE	DATE		TITLE: Radome	
DRAWN	bunnie		8/27/21			
CHK'D						
APPV'D						
MFG						
Q.A				MATERIAL: ABS/PC Black	DWG NO. radome-aug21	A3
				WEIGHT:	SCALE:2:1	SHEET 1 OF 1