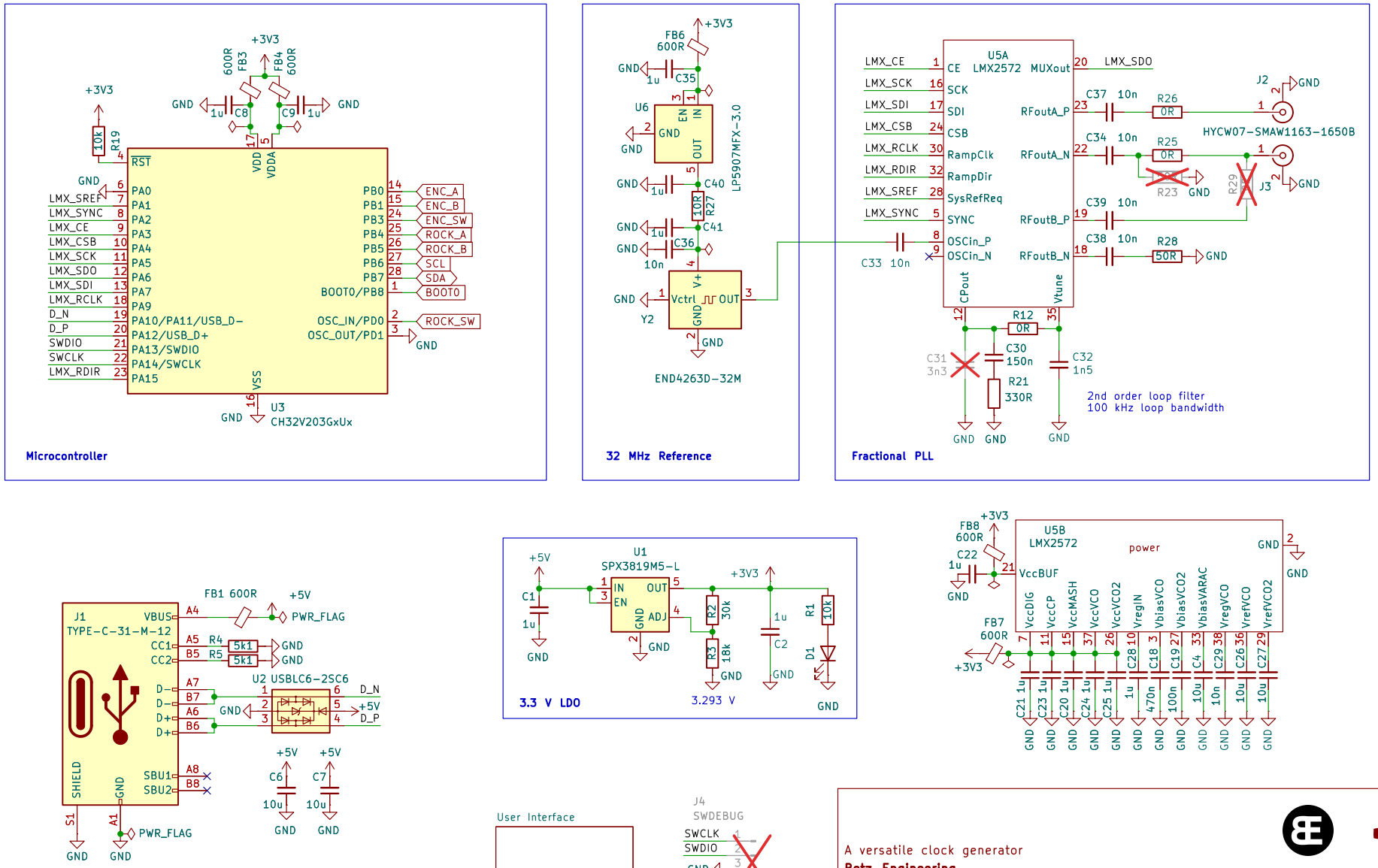
Microcontroller
U3
CH32V203GxUx
RST
PA0
PA1
PA2
PA3
PA4
PA5
PA6
PA7
PA9
PA10/PA11/USB_D-
PA12/USB_D+
PA13/SWDIO
PA14/SWCLK
PA15
PB0
PB1
PB3
PB4
PB5
PB6
PB7
BOOT0/PB8
OSC_IN/PD0
OSC_OUT/PD1
VDD
VDDA
VSS
LMX_SREF
LMX_SYNC
LMX_CE
LMX_CSB
LMX_SCK
LMX_SDO
LMX_SDI
LMX_RCLK
LMX_RDIR
D_N
D_P
SWDIO
SWCLK
ENC_A
ENC_B
ENC_SW
ROCK_A
ROCK_B
SCL
SDA
BOOT0
ROCK_SW
32 MHz Reference
U6
LP5907MFX-3.0
END4263D-32M
Y2
Fractional PLL
U5A
LMX2572
CE
SCK
SDI
CSB
RampClk
RampDir
SysRefReq
SYNC
OSCin_P
OSCin_N
MUXout
RFoutA_P
RFoutA_N
RFoutB_P
RFoutB_N
CPout
Vtune
LMX_SDO
HYCW07-SMAW1163-1650B
2nd order loop filter
100 kHz loop bandwidth
J1
TYPE-C-31-M-12
VBUS
CC1
CC2
D-
D+
SBU1
SBU2
SHIELD
PWR_FLAG
U2 USBLC6-2SC6
D_N
D_P
3.3 V LDO
U1
SPX3819M5-L
IN
OUT
EN
GND
ADJ
3.293 V
U5B
LMX2572
power
VccBUF
VccDIG
VccCP
VccMASH
VccVCO
VccVCO2
VregIN
VbiasVCO
VbiasVCO2
VbiasVARAC
VregVCO
VrefVCO
VrefVCO2
User Interface
File: UI.kicad_sch
J4
SWDEBUG
SWCLK
SWDIO
A versatile clock generator
Betz Engineering
Sheet: /
File: clock_box.kicad_sch
Title: clock_box
Size: A4
Date: 2026-04-02
KiCad E.D.A. 10.0.0-rc2
Rev: –
Id: 1/2

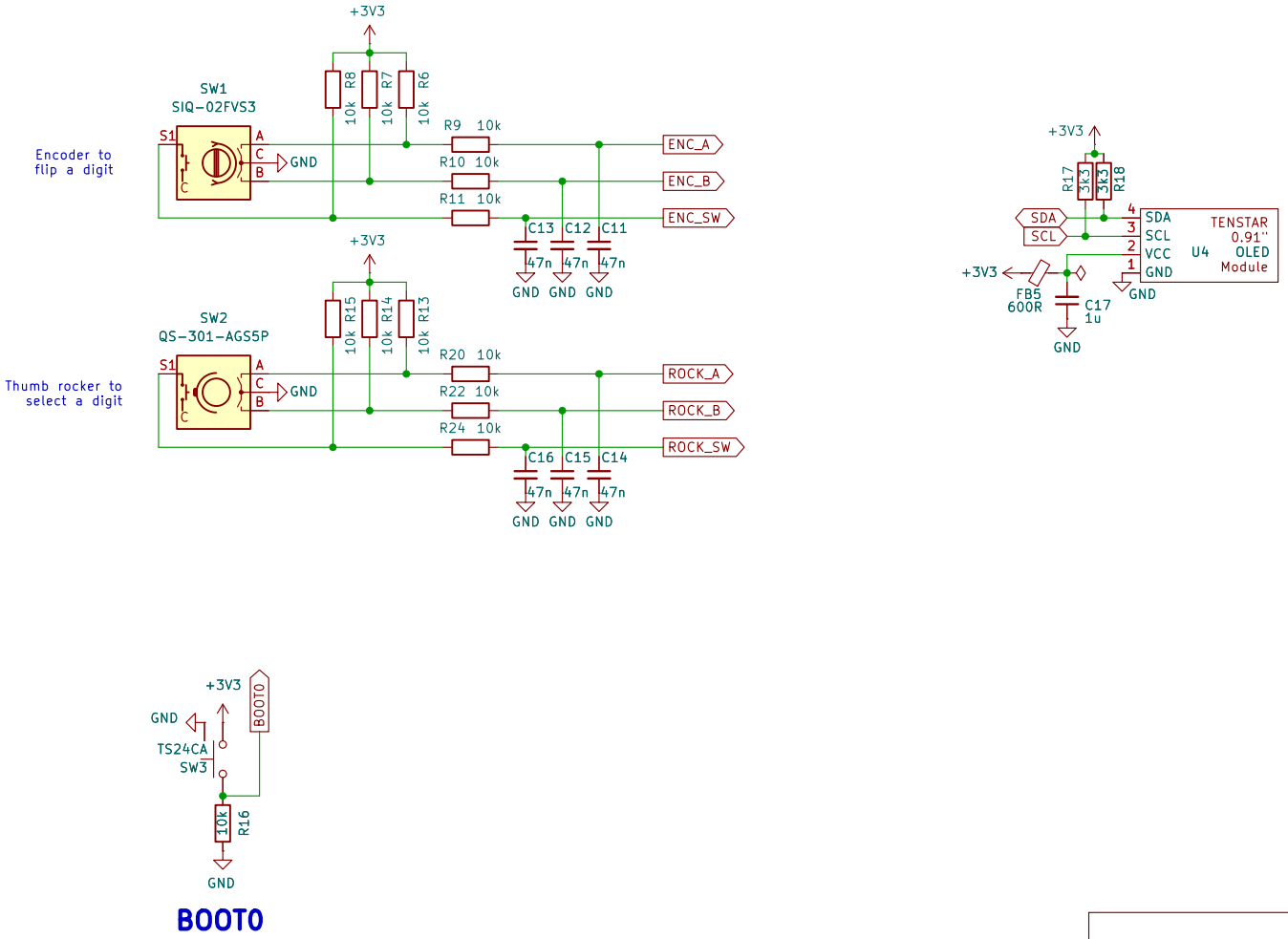

BOOT0

Sheet: /User Interface/
File: UI.kicad_sch

Title:

Size: A4	Date: 2026-04-02	**Rev: –**
KiCad E.D.A. 10.0.0-rc2		Id: 2/2