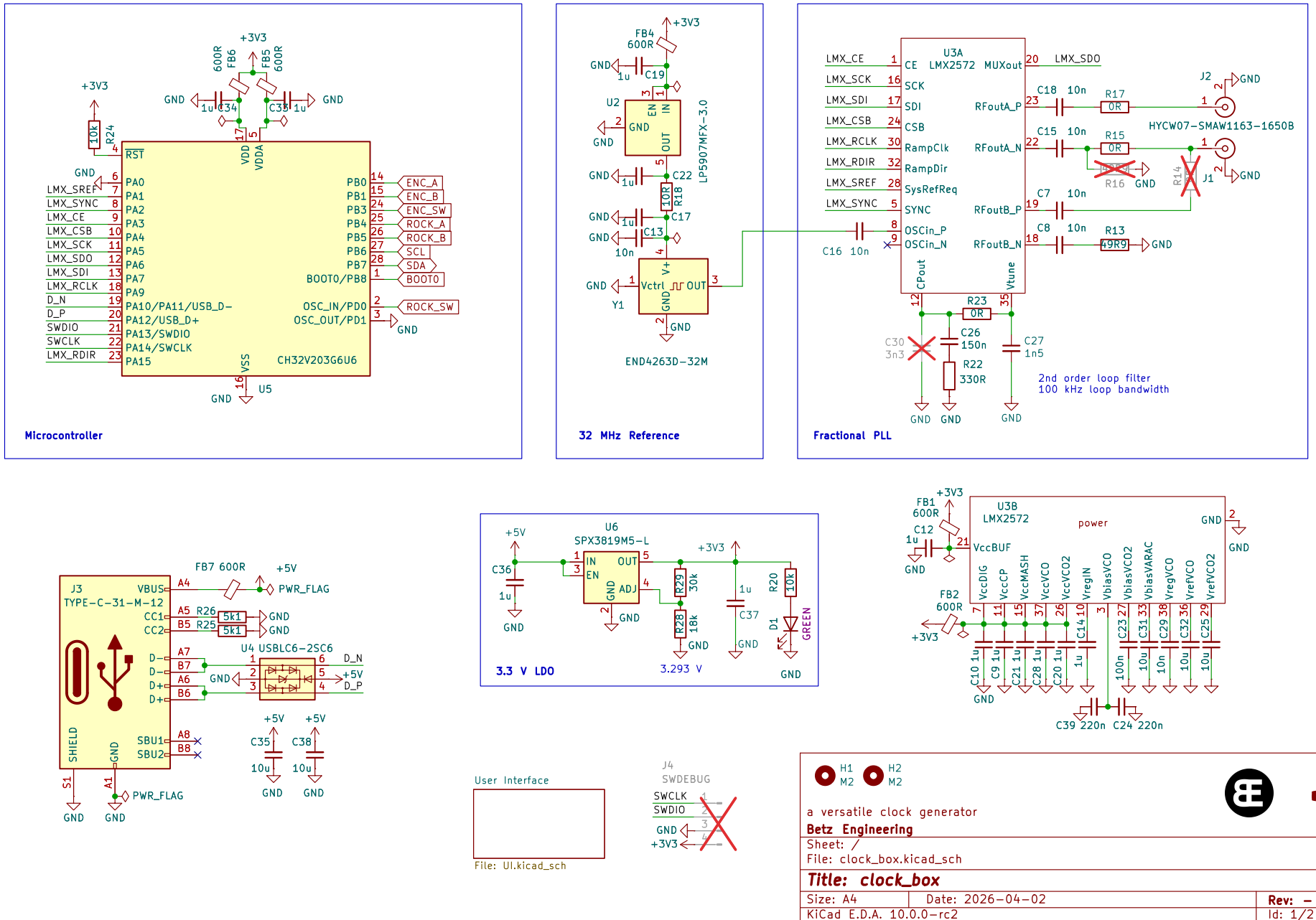

H1 M2 H2 M2

a versatile clock generator

Betz Engineering

Sheet: /

File: clock_box.kicad_sch

Title: clock_box

Size: A4	Date: 2026-04-02	Rev: –
KiCad E.D.A. 10.0.0-rc2		Id: 1/2

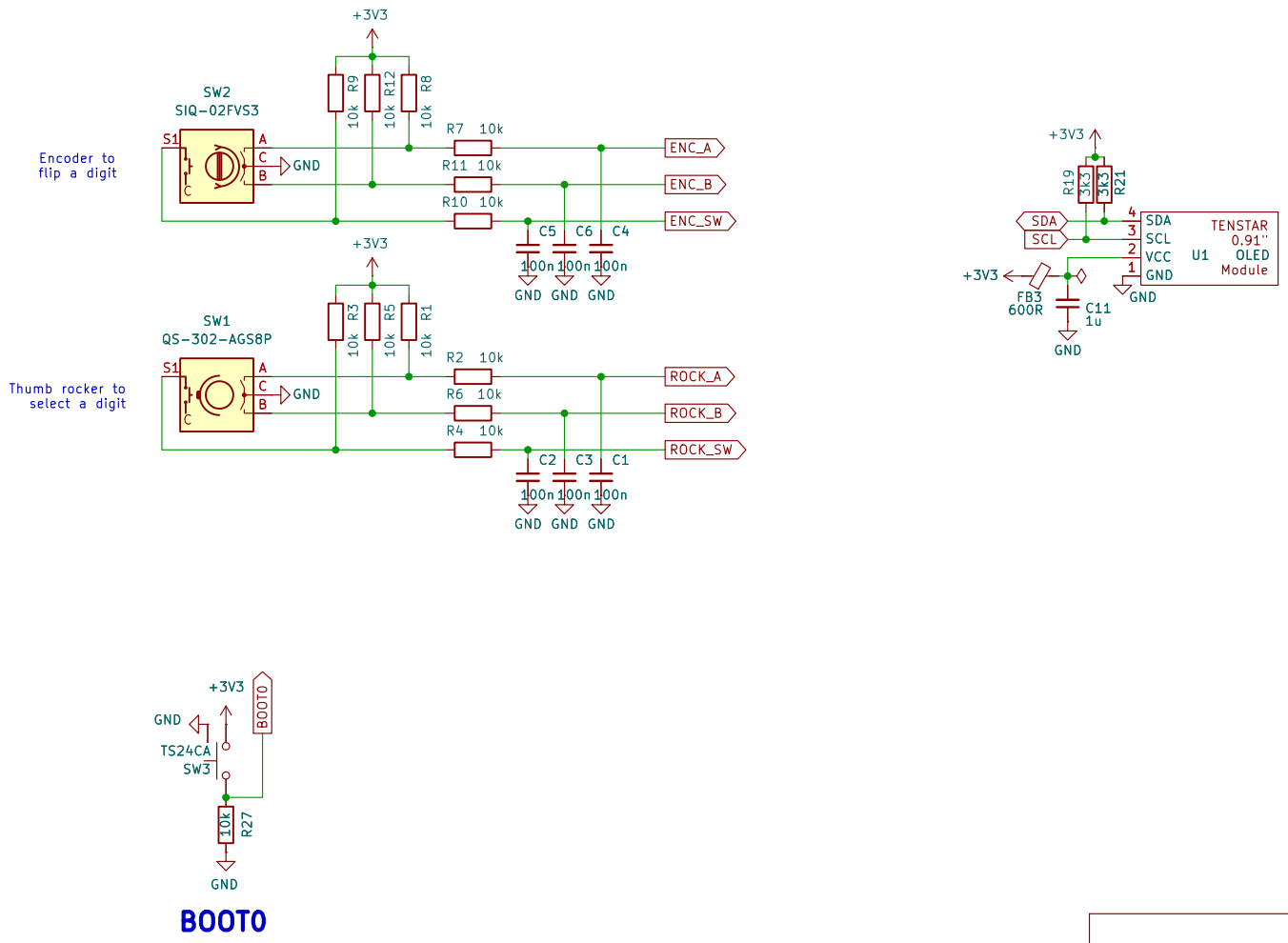

a versatile clock generator

Sheet: /User Interface/
File: UI.kicad_sch

Title:

Size: A4	Date: 2026-04-02	**Rev: –**
KiCad E.D.A. 10.0.0-rc2		Id: 2/2