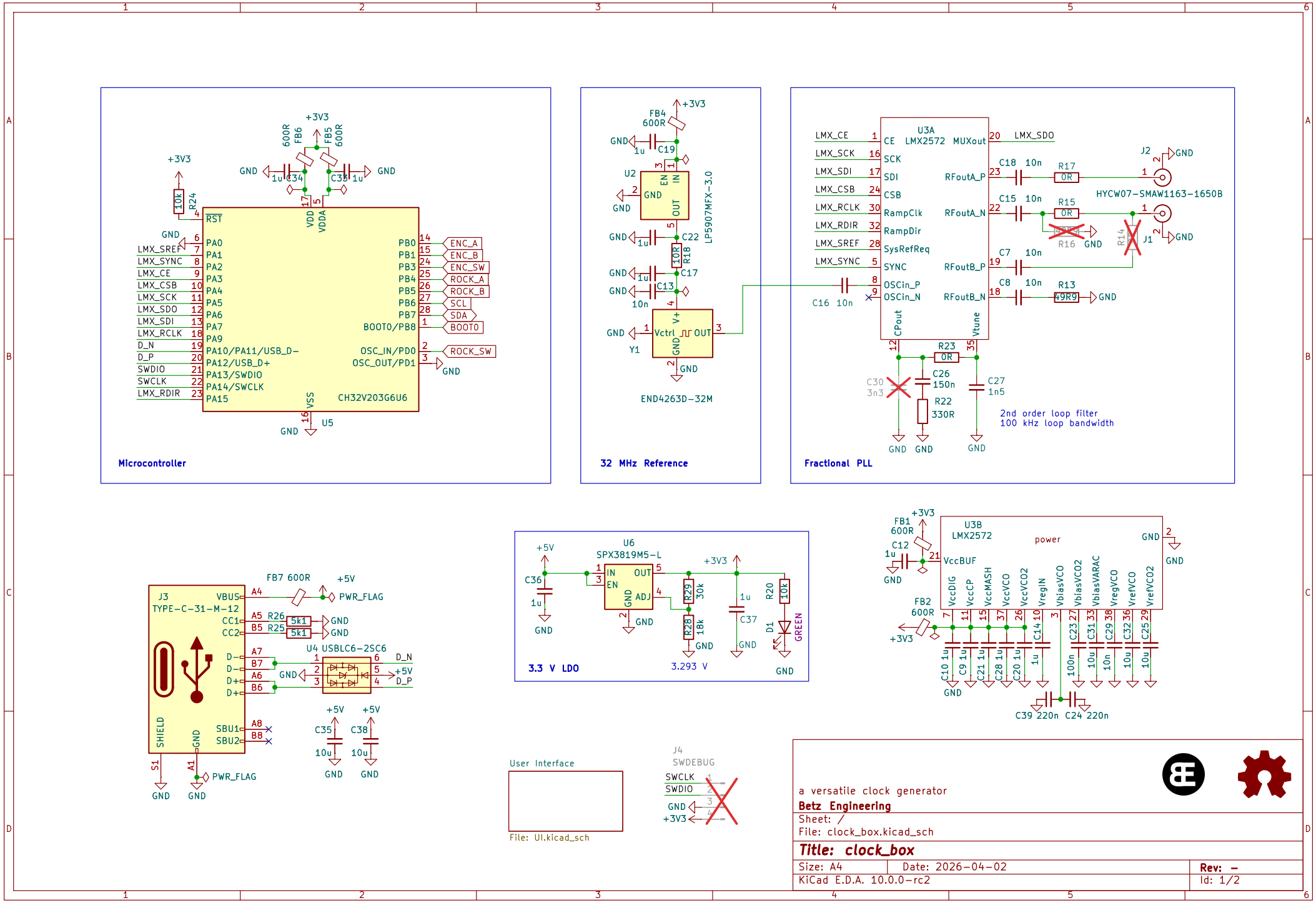
Microcontroller
U5
CH32V203G6U6
RST
PA0
PA1
PA2
PA3
PA4
PA5
PA6
PA7
PA9
PA10/PA11/USB_D-
PA12/USB_D+
PA13/SWDIO
PA14/SWCLK
PA15
PB0
PB1
PB3
PB4
PB5
PB6
PB7
BOOT0/PB8
OSC_IN/PD0
OSC_OUT/PD1
VDD
VDDA
VSS
LMX_SREF
LMX_SYNC
LMX_CE
LMX_CSB
LMX_SCK
LMX_SDO
LMX_SDI
LMX_RCLK
LMX_RDIR
D_N
D_P
SWDIO
SWCLK
ENC_A
ENC_B
ENC_SW
ROCK_A
ROCK_B
SCL
SDA
BOOT0
ROCK_SW
+3V3
GND
FB6 600R
FB5 600R
C34 1u
C33 1u
R24 10k
32 MHz Reference
U2
LP5907MFX-3.0
EN
IN
OUT
FB4 600R
C19 1u
C22 1u
R18 10R
C17 1u
C13 10n
Vctrl
V+
Y1
END4263D-32M
Fractional PLL
U3A
LMX2572
CE
SCK
SDI
CSB
RampClk
RampDir
SysRefReq
SYNC
OSCin_P
OSCin_N
MUXout
RFoutA_P
RFoutA_N
RFoutB_P
RFoutB_N
CPout
Vtune
C16 10n
C18 10n
C15 10n
C7 10n
C8 10n
R17 0R
R15 0R
R16
R14
R13 49R9
J2
J1
HYCW07-SMAW1163-1650B
R23 0R
C26 150n
C27 1n5
C30 3n3
R22 330R
2nd order loop filter
100 kHz loop bandwidth
J3
TYPE-C-31-M-12
VBUS
CC1
CC2
D-
D+
SHIELD
SBU1
SBU2
FB7 600R
PWR_FLAG
R26 5k1
R25 5k1
U4 USBLC6-2SC6
D_N
D_P
C35 10u
C38 10u
3.3 V LDO
U6
SPX3819M5-L
IN
OUT
EN
GND
ADJ
C36 1u
R29 30k
R28 18k
3.293 V
C37 1u
R20 10k
D1 GREEN
U3B
LMX2572
power
FB1 600R
C12 1u
FB2 600R
VccBUF
VccDIG
VccCP
VccMASH
VccVCO
VccVCO2
VregIN
VbiasVCO
VbiasVCO2
VbiasVARAC
VregVCO
VrefVCO
VrefVCO2
C10 1u
C9 1u
C21 1u
C28 1u
C20 1u
C14 1u
C23 100n
C31 10u
C29 10n
C32 10u
C25 10u
C39 220n
C24 220n
User Interface
File: UI.kicad_sch
J4
SWDEBUG
SWCLK
SWDIO
a versatile clock generator
Betz Engineering
Sheet: /
File: clock_box.kicad_sch
Title: clock_box
Size: A4
Date: 2026-04-02
KiCad E.D.A. 10.0.0-rc2
Rev: –
Id: 1/2

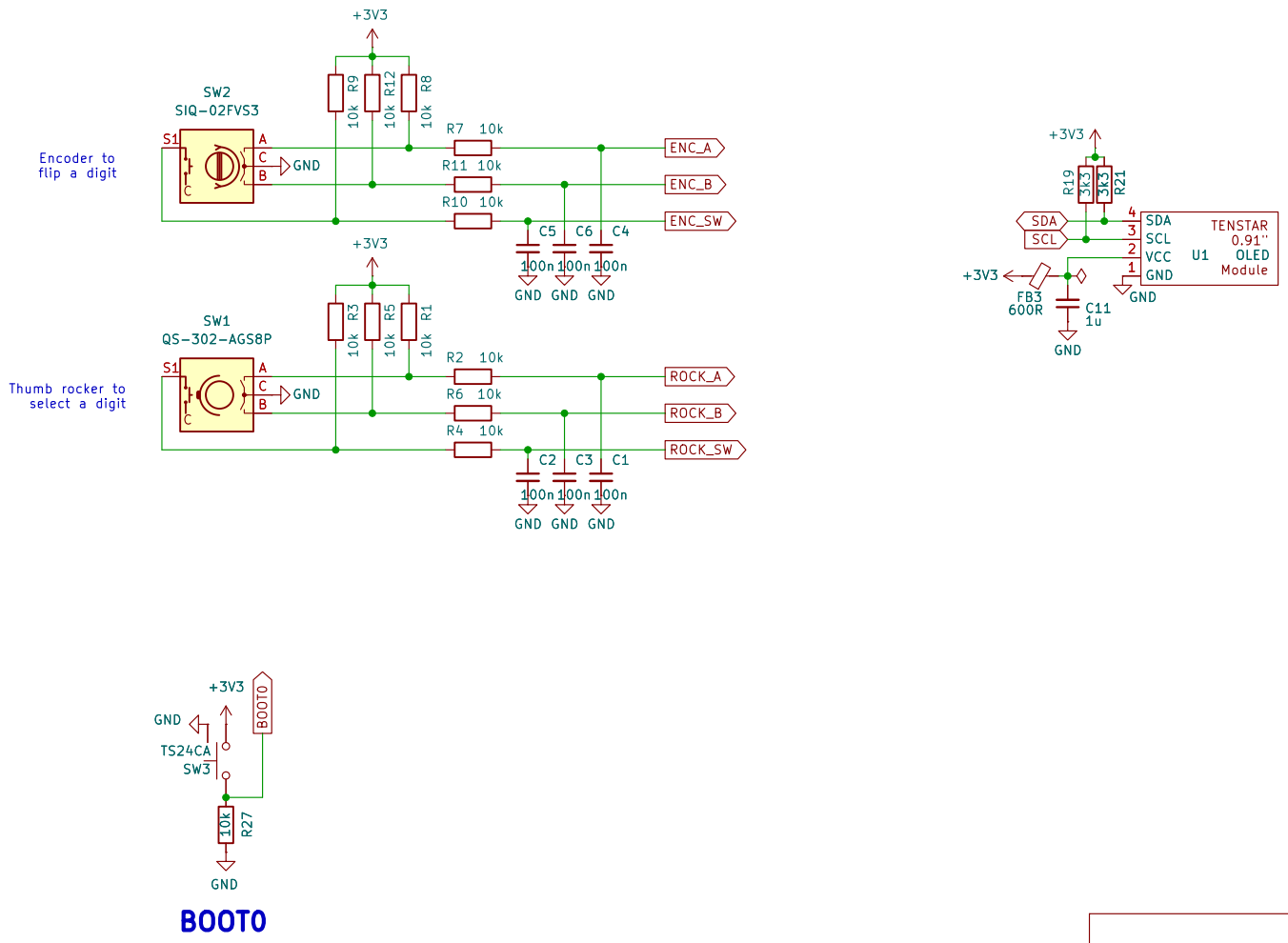

a versatile clock generator

Sheet: /User Interface/
File: UI.kicad_sch

Title:

Size: A4	Date: 2026-04-02	**Rev: –**
KiCad E.D.A. 10.0.0-rc2		Id: 2/2