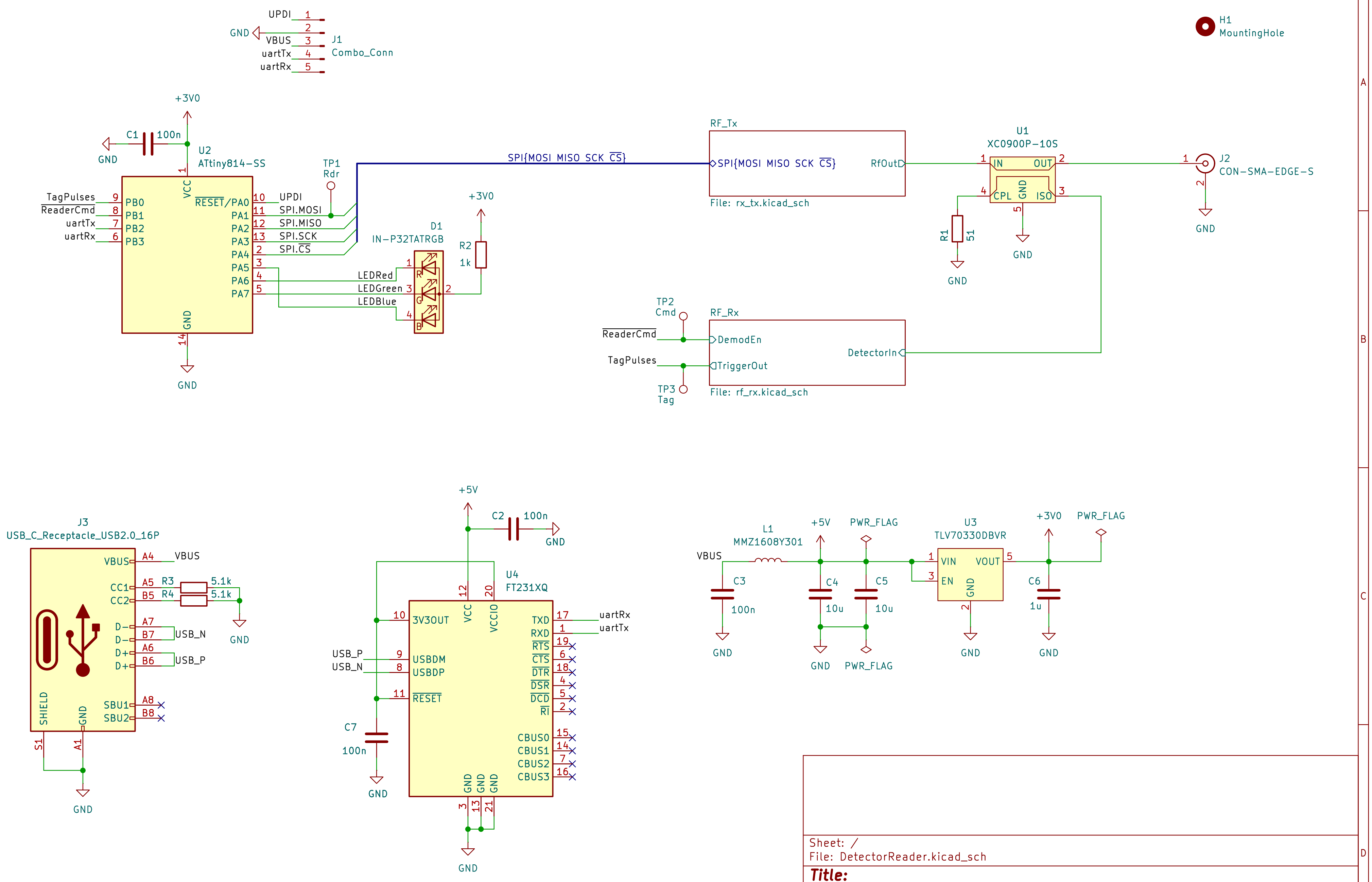
UPDI
GND
VBUS
uartTx
uartRx
J1
Combo_Conn
H1
MountingHole
+3V0
C1
100n
GND
U2
ATtiny814-SS
TagPulses
ReaderCmd
uartTx
uartRx
PB0
PB1
PB2
PB3
VCC
RESET/PA0
PA1
PA2
PA3
PA4
PA5
PA6
PA7
GND
UPDI
SPI.MOSI
SPI.MISO
SPI.SCK
SPI.CS
TP1
Rdr
SPI{MOSI MISO SCK CS}
RF_Tx
SPI{MOSI MISO SCK CS}
RfOut
File: rx_tx.kicad_sch
U1
XC0900P-10S
IN
OUT
CPL
GND
ISO
R1
51
GND
J2
CON-SMA-EDGE-S
D1
IN-P32TATRGB
LEDRed
LEDGreen
LEDBlue
R
G
B
R2
1k
+3V0
TP2
Cmd
ReaderCmd
TagPulses
TP3
Tag
RF_Rx
DemodEn
TriggerOut
DetectorIn
File: rf_rx.kicad_sch
J3
USB_C_Receptacle_USB2.0_16P
VBUS
CC1
CC2
D-
D+
SBU1
SBU2
SHIELD
GND
A4
A5
B5
A7
B7
A6
B6
A8
B8
S1
A1
R3
R4
5.1k
5.1k
USB_N
USB_P
+5V
C2
100n
U4
FT231XQ
VCC
VCCIO
3V3OUT
USBDM
USBDP
RESET
TXD
RXD
RTS
CTS
DTR
DSR
DCD
RI
CBUS0
CBUS1
CBUS2
CBUS3
uartRx
uartTx
USB_P
USB_N
C7
100n
L1
MMZ1608Y301
VBUS
C3
100n
+5V
C4
10u
C5
10u
PWR_FLAG
U3
TLV70330DBVR
VIN
VOUT
EN
GND
+3V0
PWR_FLAG
C6
1u

Sheet: /
File: DetectorReader.kicad_sch

Title:

Size: A4 | Date: | **Rev:**

KiCad E.D.A. 9.0.0 | Id: 1/3

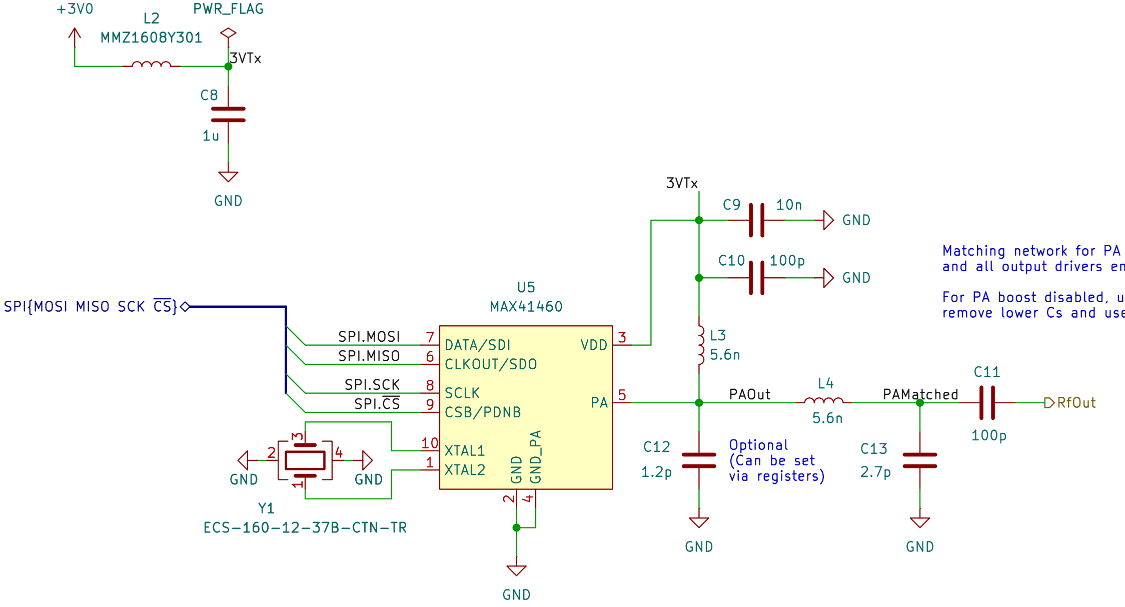
+3V0
L2
MMZ1608Y301
PWR_FLAG
3VTx
C8
1u
GND
3VTx
C9
10n
GND
C10
100p
GND
U5
MAX41460
SPI{MOSI MISO SCK $\overline{CS}$}
SPI.MOSI
SPI.MISO
SPI.SCK
SPI.$\overline{CS}$
7
6
8
9
10
1
DATA/SDI
CLKOUT/SDO
SCLK
CSB/PDNB
XTAL1
XTAL2
VDD
3
PA
5
GND
GND_PA
2
4
GND
L3
5.6n
PAOut
L4
5.6n
PAMatched
C11
100p
RfOut
C12
1.2p
C13
2.7p
GND
GND
2
3
4
1
GND
GND
Y1
ECS-160-12-37B-CTN-TR

Optional
(Can be set
via registers)

Matching network for PA boost
and all output drivers enabled (via SPI register).

For PA boost disabled, use 29 nH for Ls,
remove lower Cs and use 1.2 pF output C.

Sheet: /RF_Tx/
File: rx_tx.kicad_sch

Title:

Size: A4
Date:
Rev:
KiCad E.D.A. 9.0.0
Id: 2/3

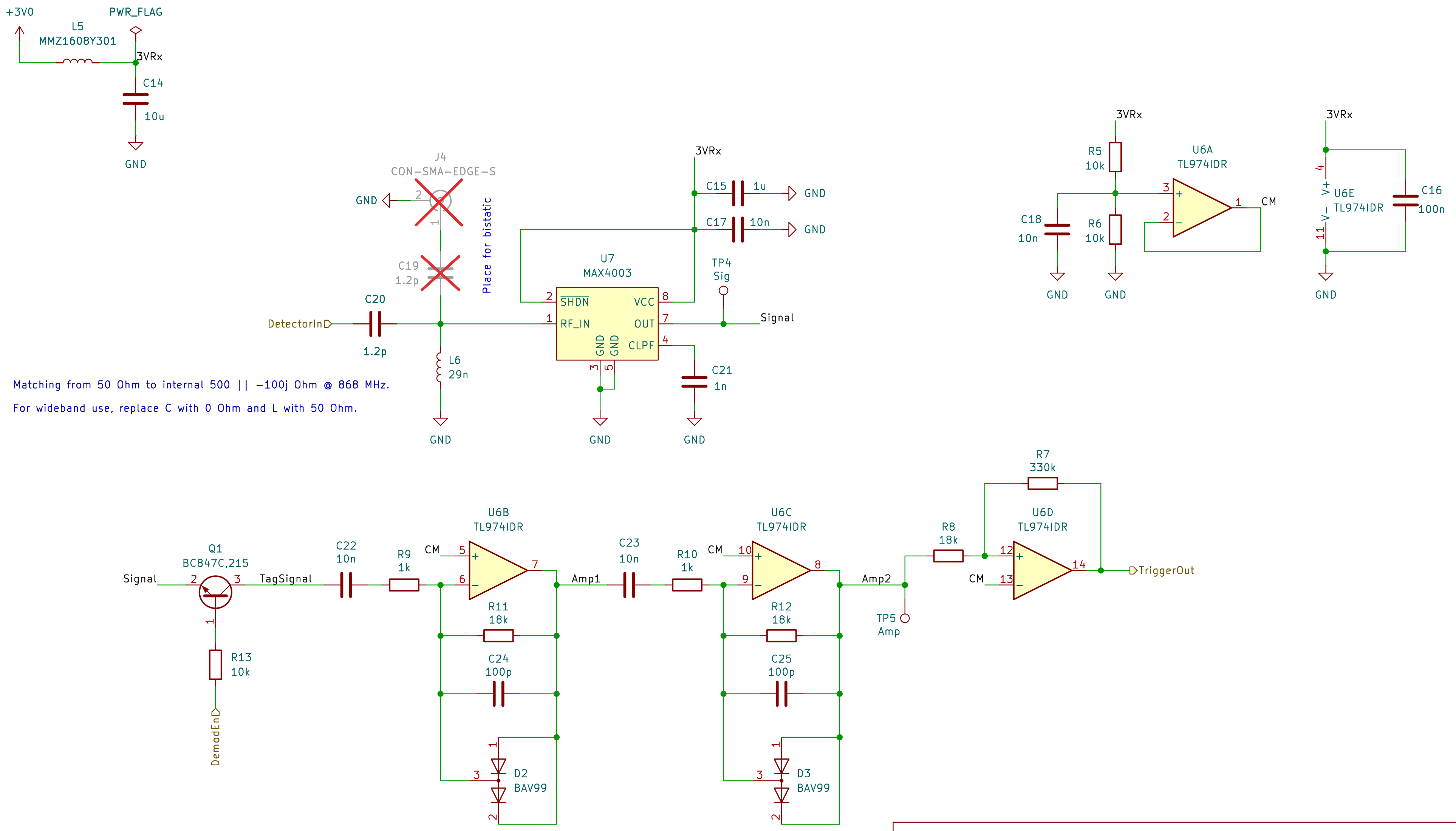
+3V0
PWR_FLAG
L5
MMZ1608Y301
3VRx
C14
10u
GND
J4
CON-SMA-EDGE-S
GND
2
1
C19
1.2p
Place for bistatic
C20
1.2p
DetectorIn
L6
29n
GND
U7
MAX4003
SHDN
RF_IN
VCC
OUT
CLPF
GND
GND
2
1
8
7
4
3
5
3VRx
C15
1u
GND
C17
10n
GND
TP4
Sig
Signal
C21
1n
GND
GND
3VRx
R5
10k
U6A
TL974IDR
3
2
1
CM
C18
10n
R6
10k
GND
GND
3VRx
4
V+
U6E
TL974IDR
V-
11
C16
100n
GND
Q1
BC847C,215
Signal
2
3
1
TagSignal
R13
10k
DemodEn
C22
10n
R9
1k
CM
5
6
U6B
TL974IDR
7
R11
18k
C24
100p
D2
BAV99
1
3
2
Amp1
C23
10n
R10
1k
CM
10
9
U6C
TL974IDR
8
R12
18k
C25
100p
D3
BAV99
1
3
2
Amp2
TP5
Amp
R8
18k
R7
330k
U6D
TL974IDR
12
13
CM
14
TriggerOut

Matching from 50 Ohm to internal 500 || -100j Ohm @ 868 MHz.

For wideband use, replace C with 0 Ohm and L with 50 Ohm.

Sheet: /RF_Rx/
File: rf_rx.kicad_sch

Title:

Size: A4
Date:
Rev:
KiCad E.D.A. 9.0.0
Id: 3/3