ITEM NO.	PART NUMBER	DESCRIPTION	QTY.
1	WP710A10CGCK	Clear Green LED 3mm	168
2	--	Common anode wire (Row)	7
3	--	Common cathode wire (Column)	24
4	--	Common anode lead wire	14

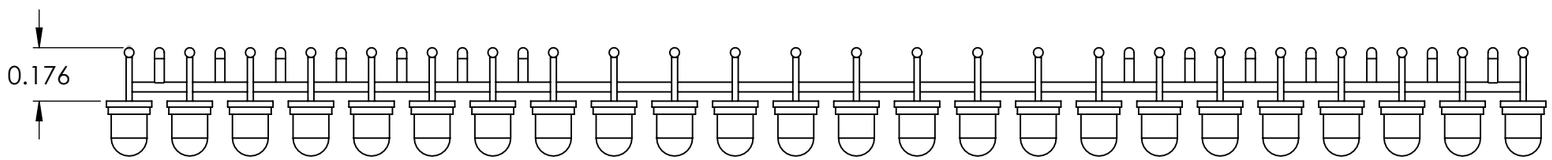

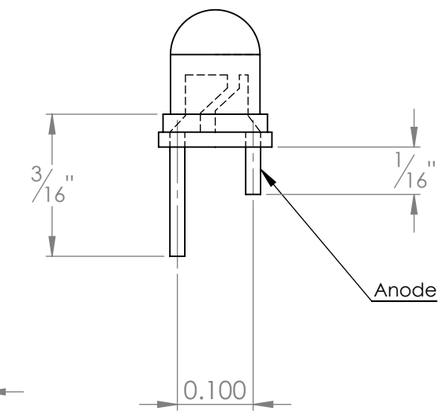

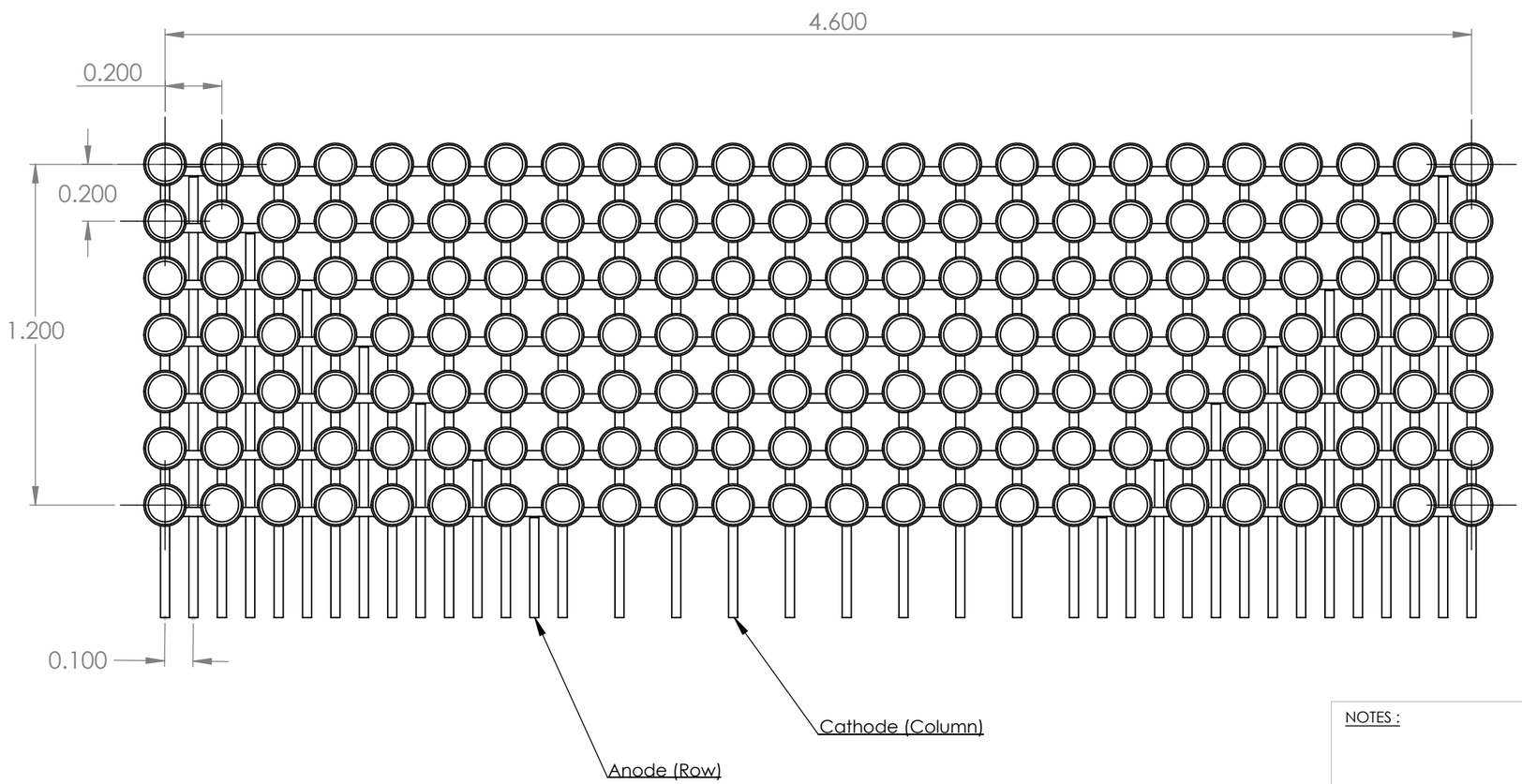

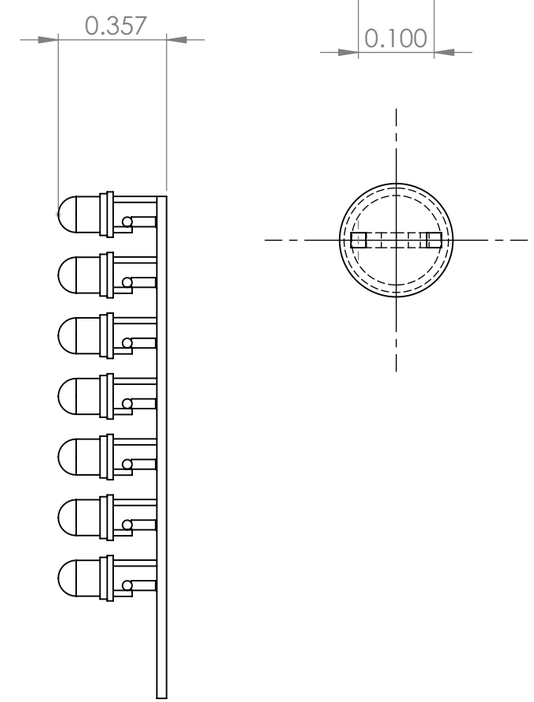

BENOIT FRIGON
bfrigon@gmail.com

NOTES :

PROJECT: Alarm Clock			
TITLE: 24 x 7 Led Matrix Dimensions			REV: A
PART #: CLK-AS-03	DOCUMENT #: CLK-DWG-22	UNITS: INCHES [MM]	SIZE: B
MATERIAL: --	FINISH: --		
DATE 1/29/2015	APVD BY :	SCALE 2:1	SHEET 1 OF 2

File : clk-dwg-22

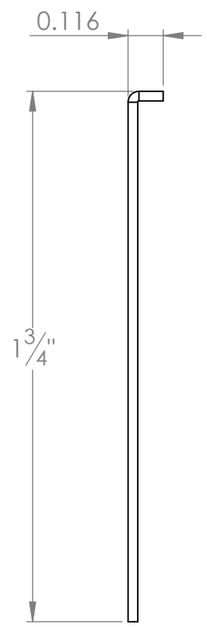

ANODE LEADS

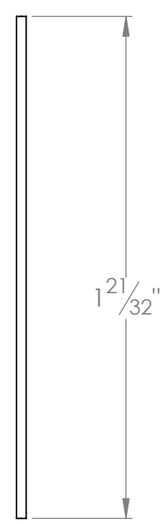

COMMON CATHODE WIRE

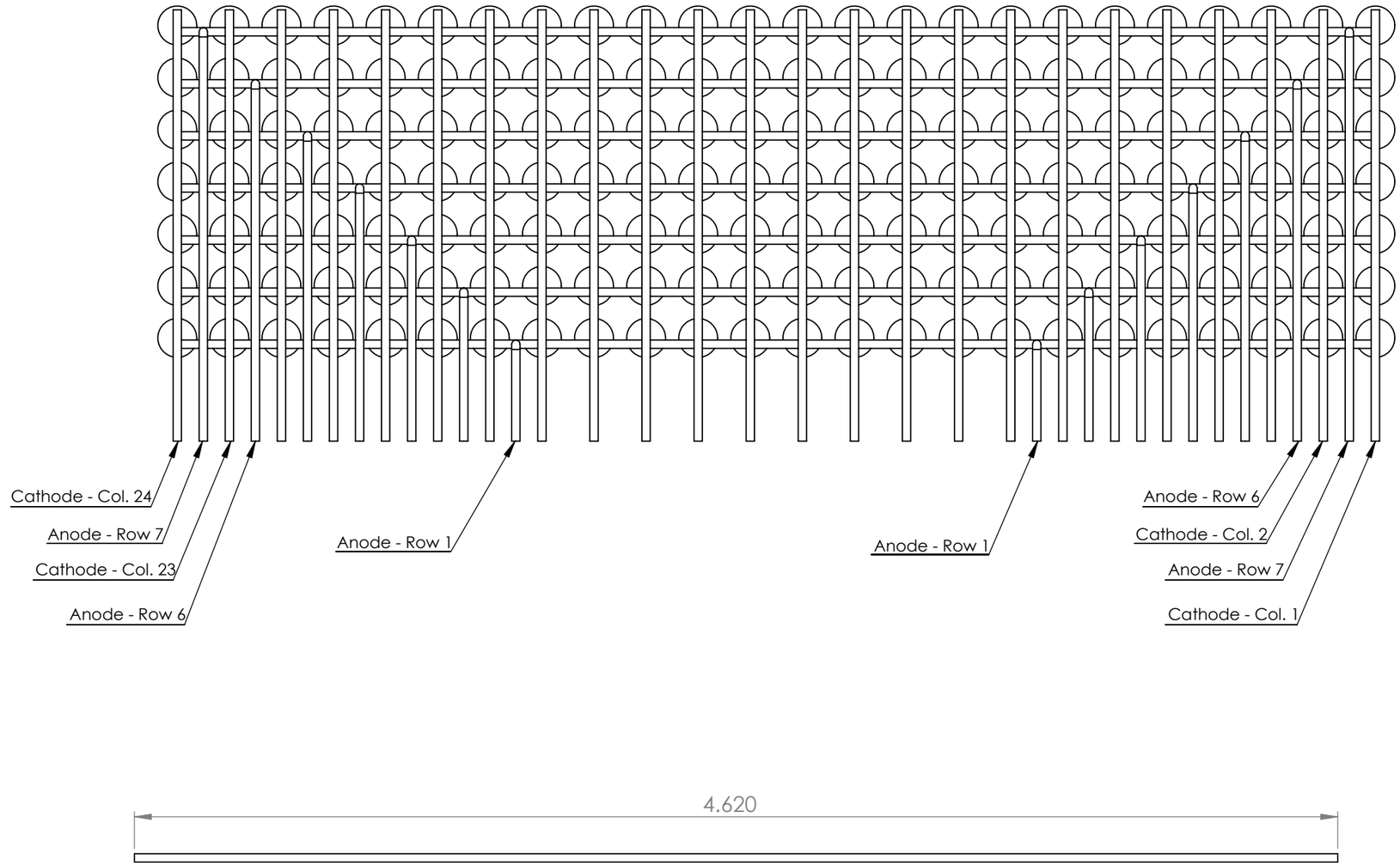

COMMON ANODE WIRE

BENOIT FRIGON
bfrigon@gmail.com

NOTES :

PROJECT Alarm Clock			
TITLE 24 x 7 Led Matrix Pinout			REV A
PART # CLK-AS-03	DOCUMENT # CLK-DWG-22	UNITS INCHES [MM]	SIZE B
MATERIAL --		FINISH --	
DATE 1/29/2015	APVD BY :	SCALE 2:1	SHEET 2 OF 2

File : clk-dwg-22