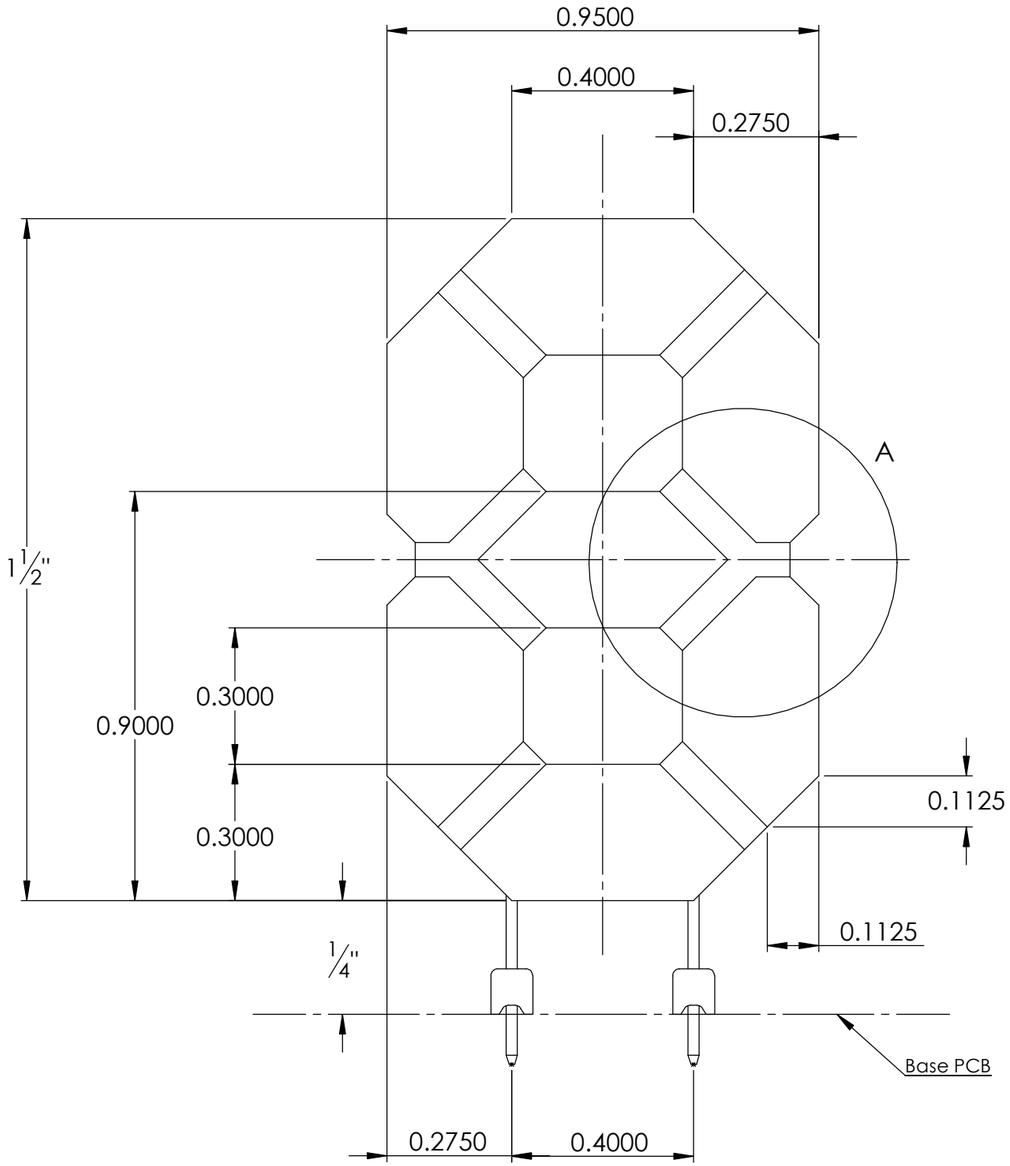

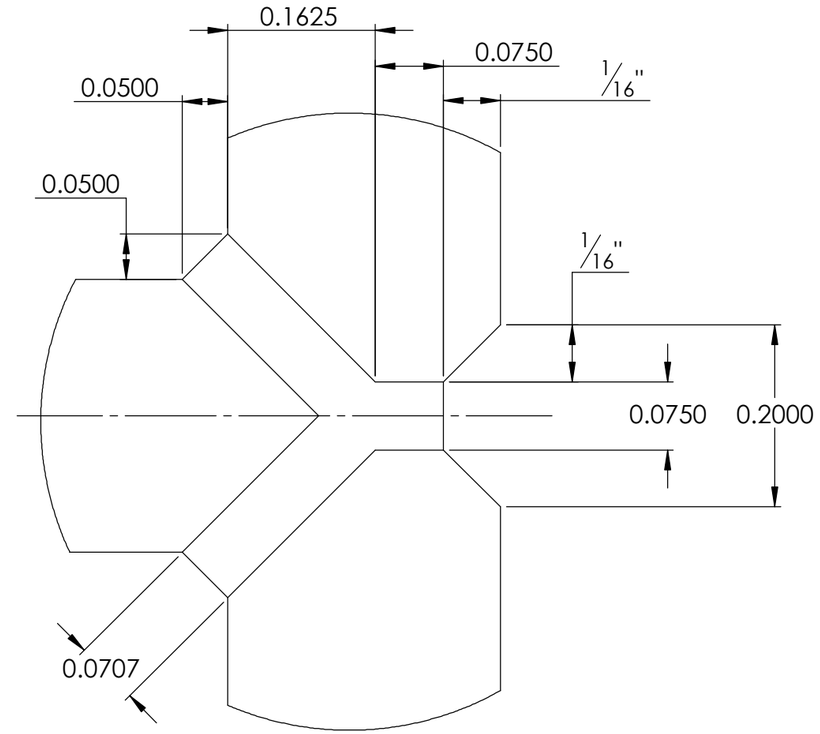

DETAIL A
SCALE 6 : 1

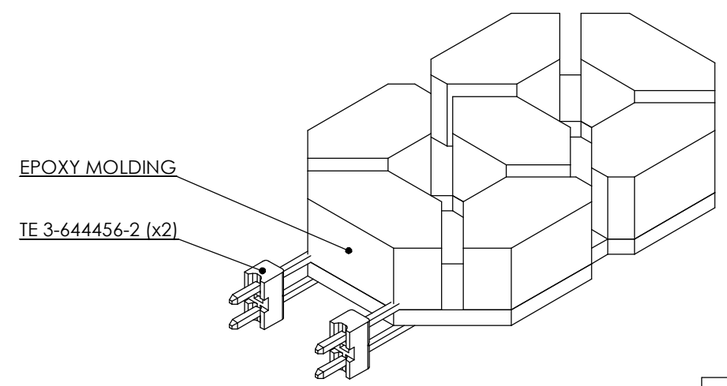

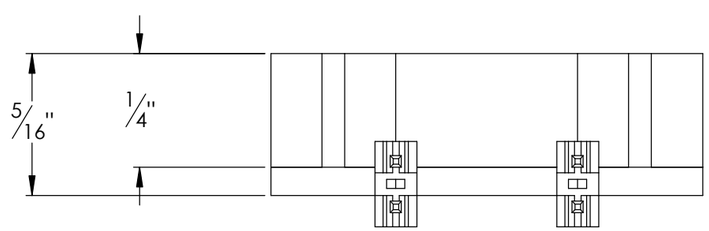

BENOIT FRIGON
bfrigon@gmail.com

NOTES :

PROJECT Alarm Clock			
TITLE Display (model B) - Segment PCB Assembly			REV A
PART # CLK-AS-07	DOCUMENT # CLK-DWG-26	UNITS INCHES [MM]	SIZE B
MATERIAL --		FINISH --	
DATE 1/5/2015	APVD BY :	SCALE 3:1	SHEET 1 OF 1

File : clk-dwg-26