J1 PINOUT	
1	3.3V
2	I2C DATA
3	I2C CLOCK
4	GND
5	N.C
6	N.C
7	N.C

J2 PINOUT	
1	3.3V
2	I2C DATA
3	I2C CLOCK
4	GND
5	ICSP CLOCK
6	ICSP DATA
7	VPP

J3 PINOUT	
1	VPP
2	VDD
3	GND
4	ICSP DATA
5	ICSP CLOCK
6	LVP

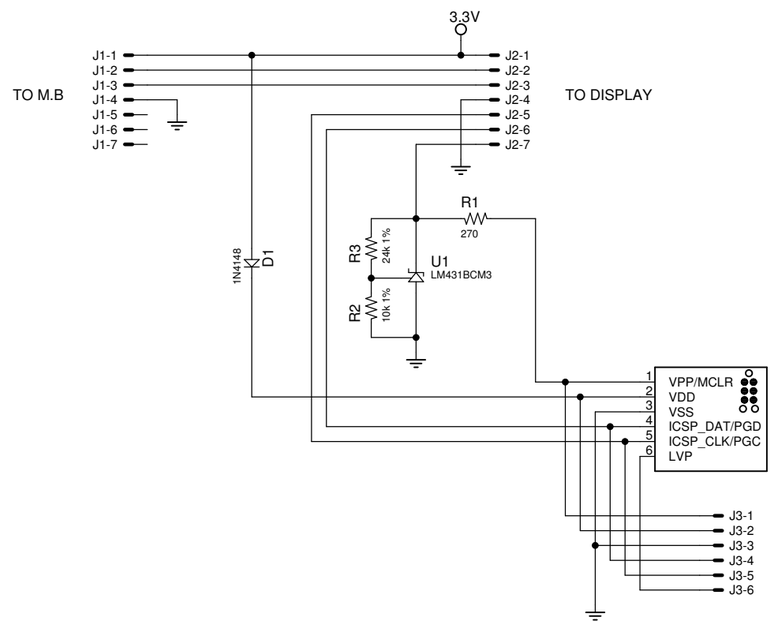

BENOIT FRIGON
bfrigon@gmail.com

PROJECT Alarm clock			
TITLE LED matrix PIC programmer adapter			REV A
PART # CLK-PC-01-PROG	DOCUMENT # CLK-SCH-51	SIZE B	SHEET 1 OF 1
LAST MOD: 1/16/14 12:23 PM	APVD BY: B.F		