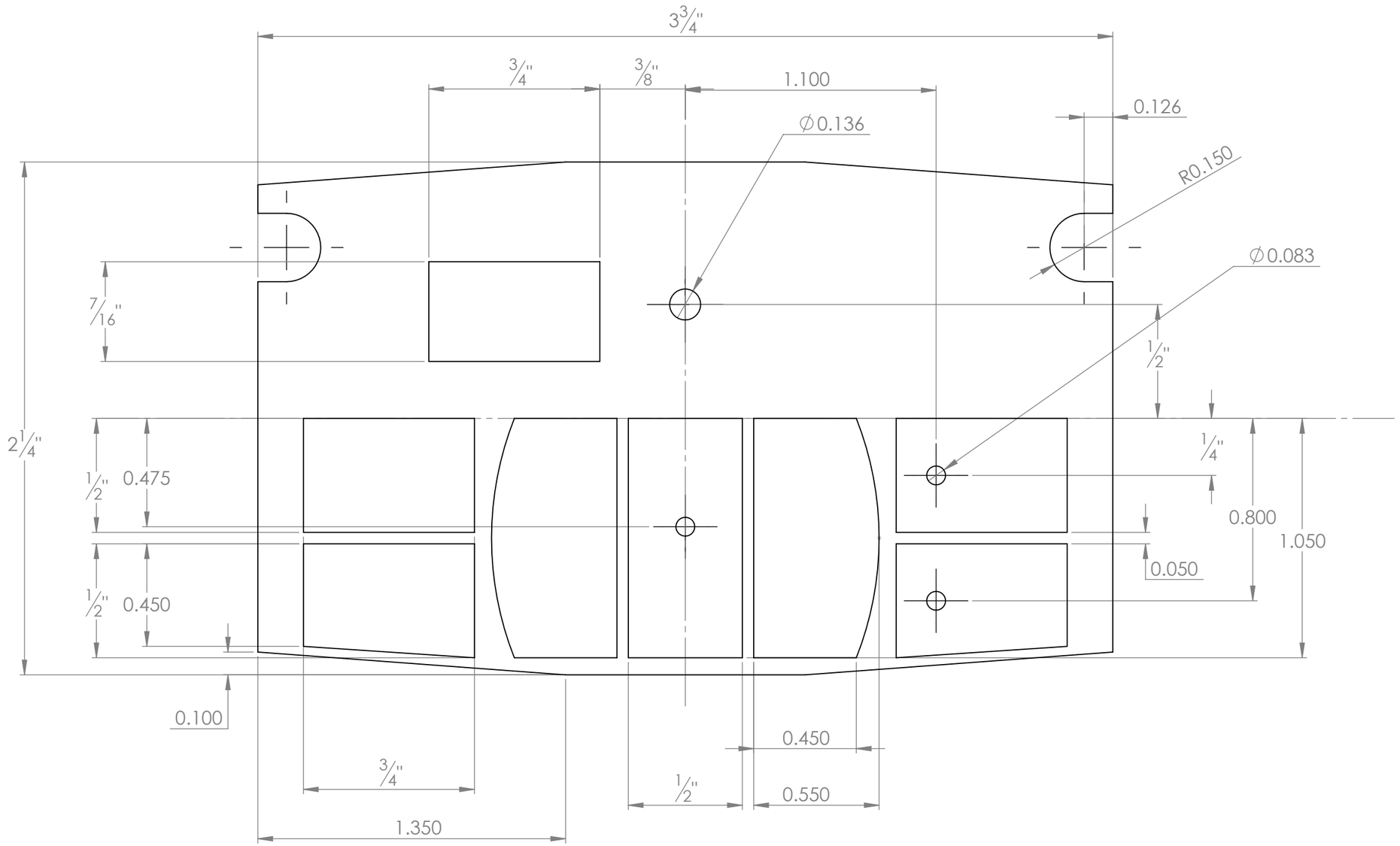

BENOIT FRIGON
BENOIT@FRIGON.INFO
WWW.BFRIGON.COM

NOTES :

PROJECT ALARM CLOCK			
TITLE TOUCH KEYPAD PCB DIMENSIONS			REV A
PART # CLK-PC-02	DOCUMENT # CLK-DWG-02	UNITS INCHES	SIZE B
MATERIAL PCB FR-4	FINISH -		
DATE 2/8/2015	APVD BY :	SCALE 2:1	SHEET 1 OF 1

FILE : CLK-DWG-02