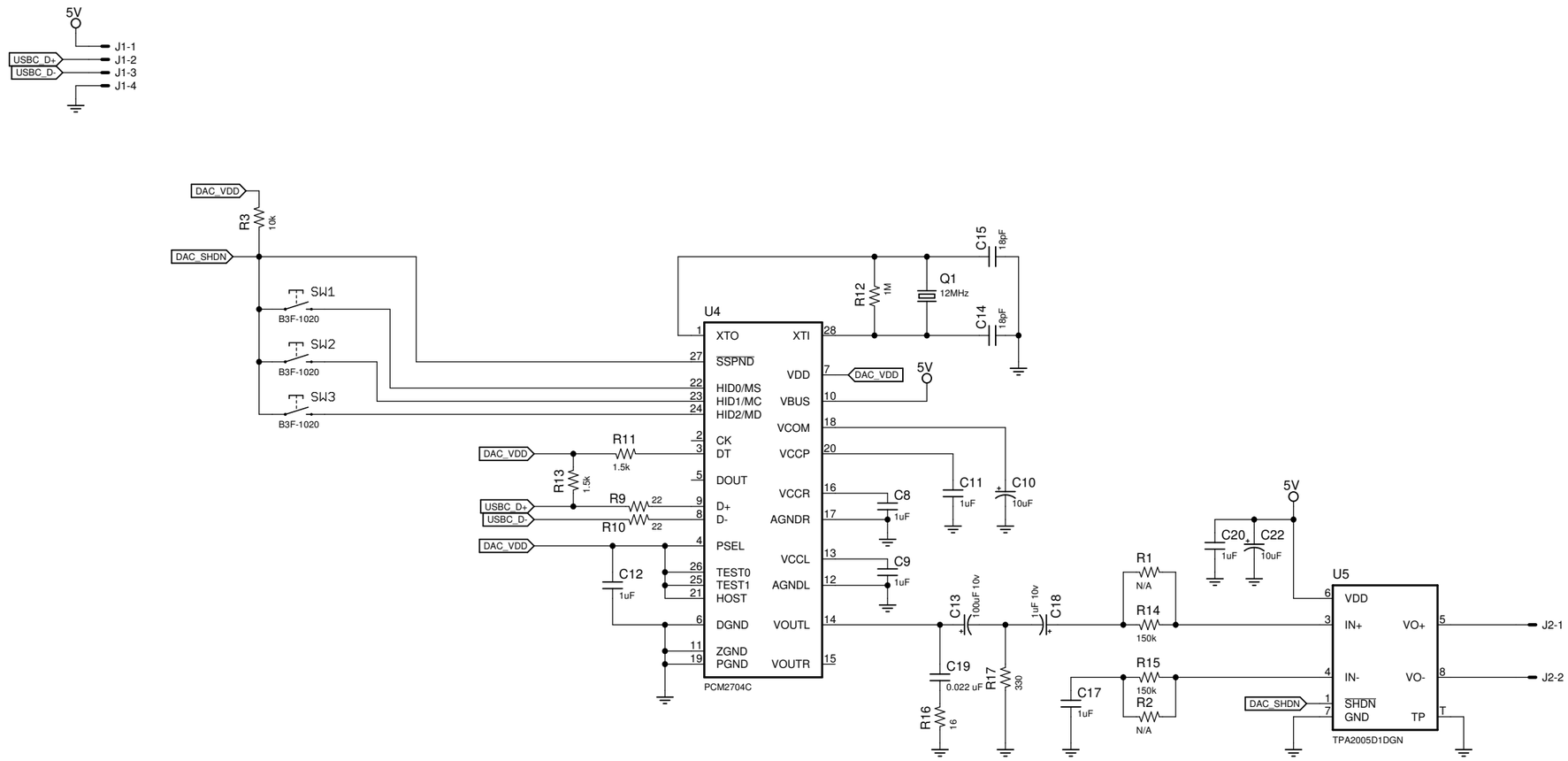

BENOIT FRIGON
bfrigon@gmail.com

PROJECT ALARM CLOCK			
TITLE CONTROLLER AUDIO			REV A
PART # TST-CLK-PC-03-AUD	DOCUMENT # CLK-SCH-50	SIZE B	SHEET 1 OF 1
LAST MOD: 14-10-10 1:45 AM		APVD BY: >APVD	