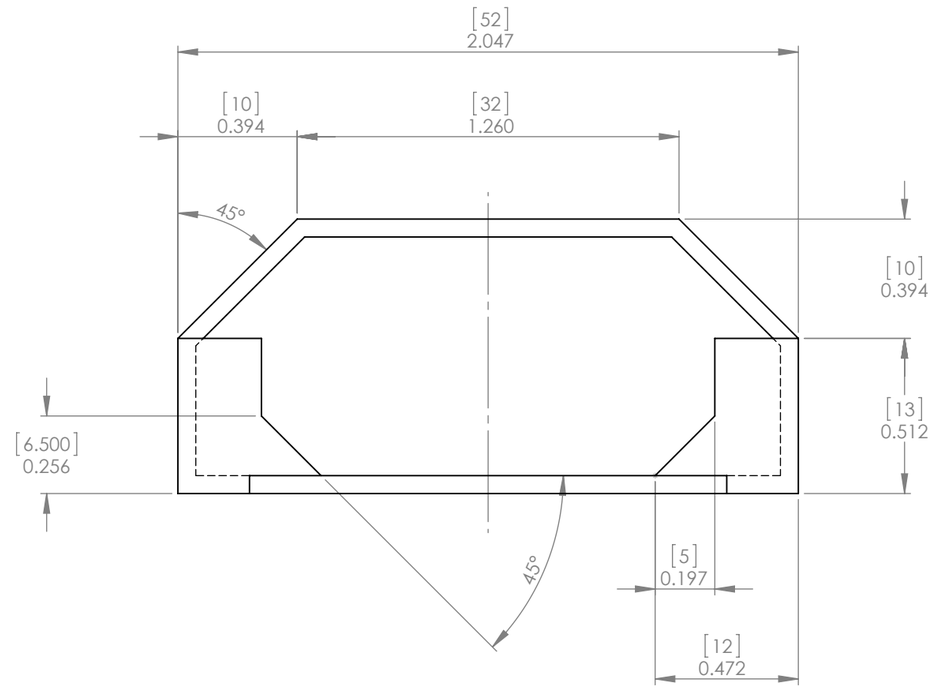


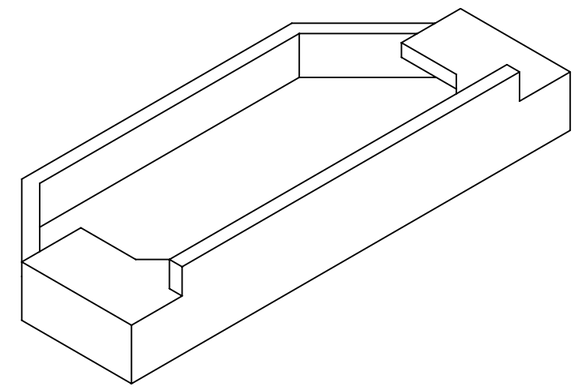

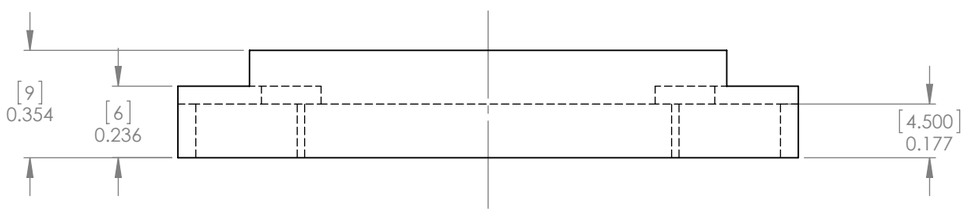


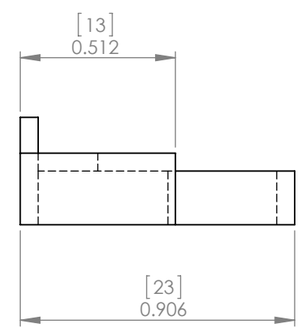


**BENOIT FRIGON**
bfrigon@gmail.com

NOTES :

WALL THICKNESS : 1.5mm

| | | | |
|---|---|---|---|
| PROJECT<br>Alarm Clock | | | |
| TITLE<br>Speaker holder<br>Dimensions | | | REV<br>A |
| PART #<br>CLK-STR-02 | DOCUMENT #<br>CLK-DWG-11 | UNITS<br>INCHES [MM] | SIZE<br>B |
| MATERIAL<br>Molded epoxy | | FINISH<br>- | |
| DATE 1/29/2015 | APVD BY : | SCALE 2:1 | SHEET 1 OF 1 |

File : clk-dwg-11