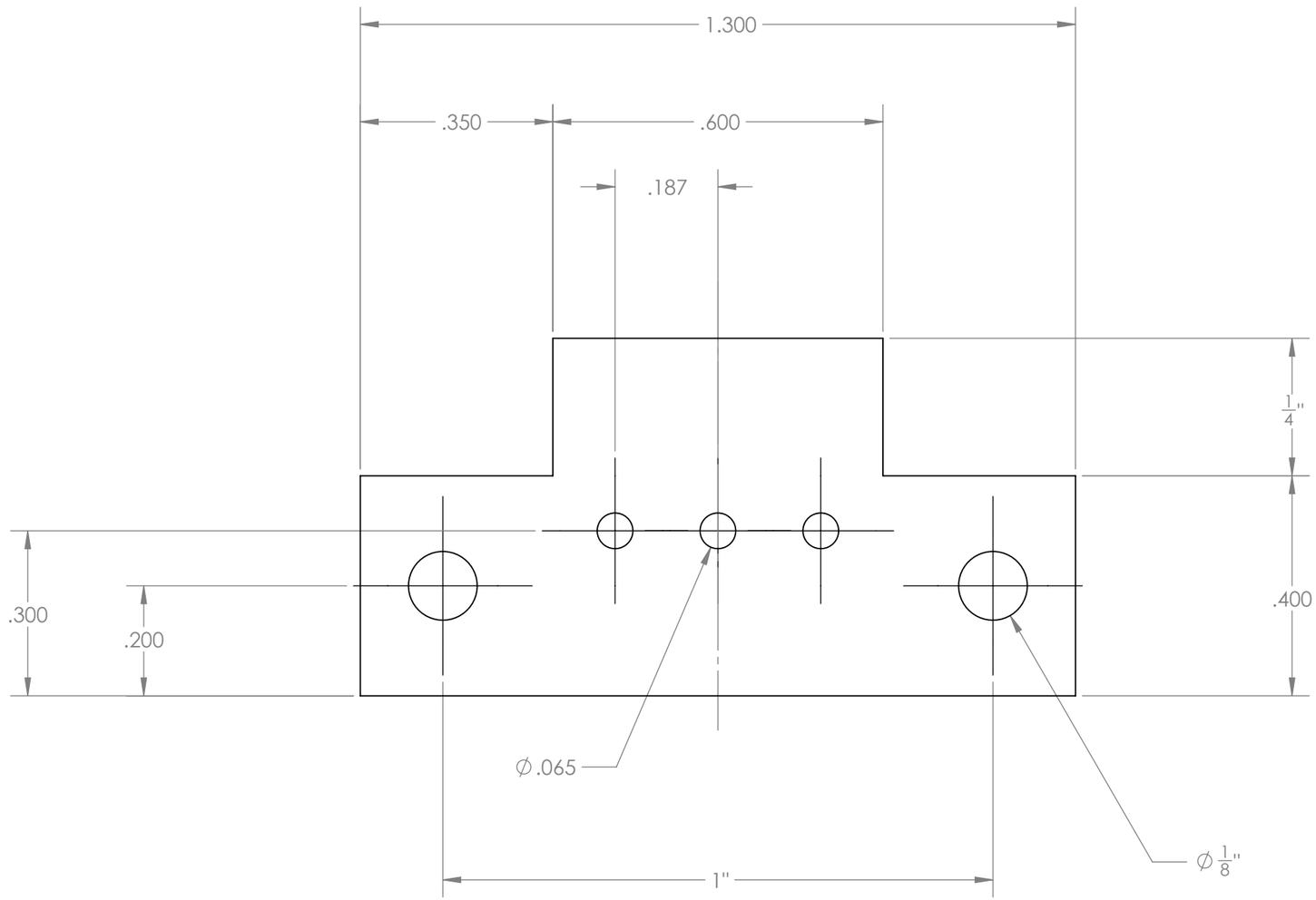

Benoit Frigon
www.frigon.info

NOTES :

PROJECT **ALARM CLOCK V3**			
TITLE **ALARM SWITCH PCB DIMENSIONS**			REV **A**
PART # **CLKV3-PC-09**	DOCUMENT # **CLKV3-DWG-17**	UNITS **INCHES**	SIZE **B**
MATERIAL **PCB FR4 - 1.6mm**		FINISH **--**	
DATE 12/13/2018	**APVD BY :**	**SCALE 4:1**	**SHEET 1 OF 2**

FILE : clkv3-dwg-17_alarm-switch-pcb

ITEM NO.	PART NUMBER	MFG	DESCRIPTION	QTY.
1	CLKV3-PC-09	--	Alarm switch PCB	1
2	L102011ML04Q	C&K Components	Slide switch SPDT - T/H - R/A	1

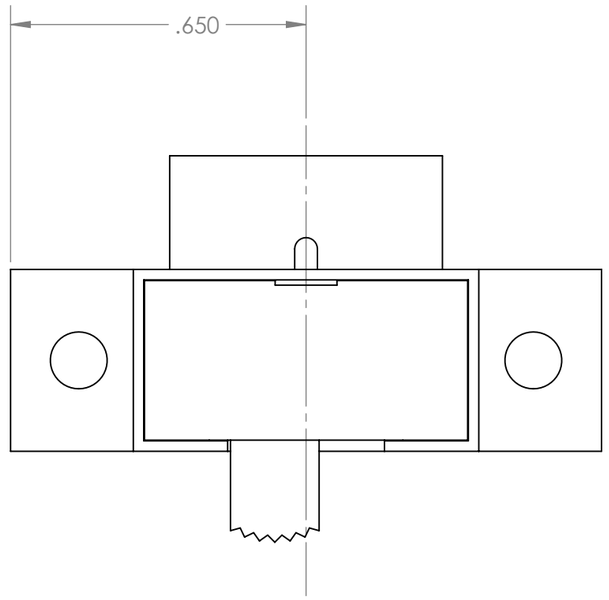

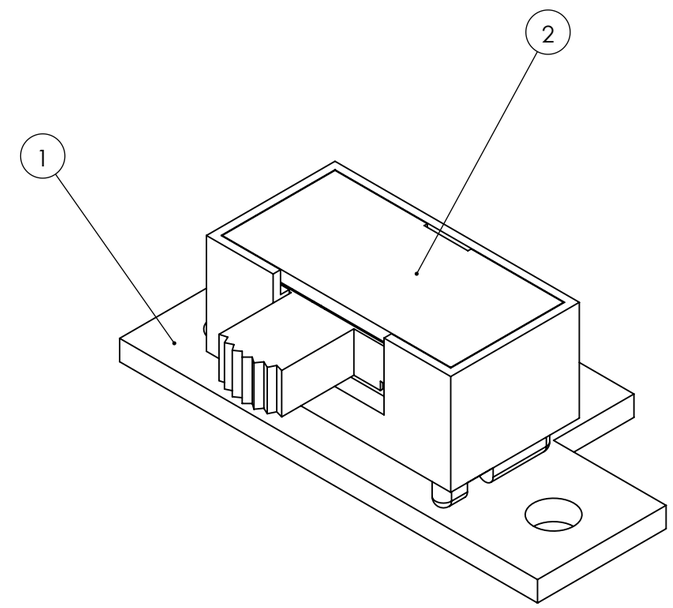

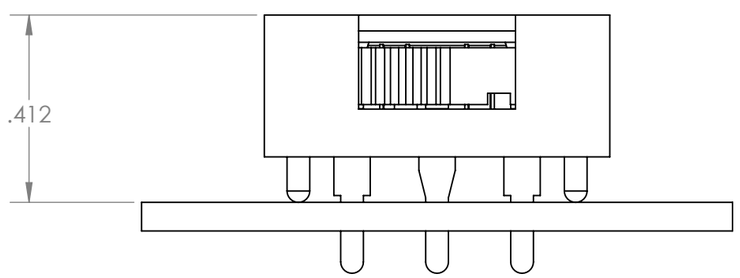

Benoit Frigon
www.frigon.info

NOTES :

PROJECT
ALARM CLOCK V3

TITLE
ALARM SWITCH PCB
COMPONENTS POSITION

REV
A

PART #	DOCUMENT #	UNITS	SIZE
CLKV3-PC-09	**CLKV3-DWG-17**	**INCHES**	**B**

MATERIAL	FINISH
PCB FR4 - 1.6mm	**--**

DATE 12/13/2018	APVD BY :	SCALE 3:1	SHEET 2 OF 2

FILE : clkv3-dwg-17_alarm-switch-pcb