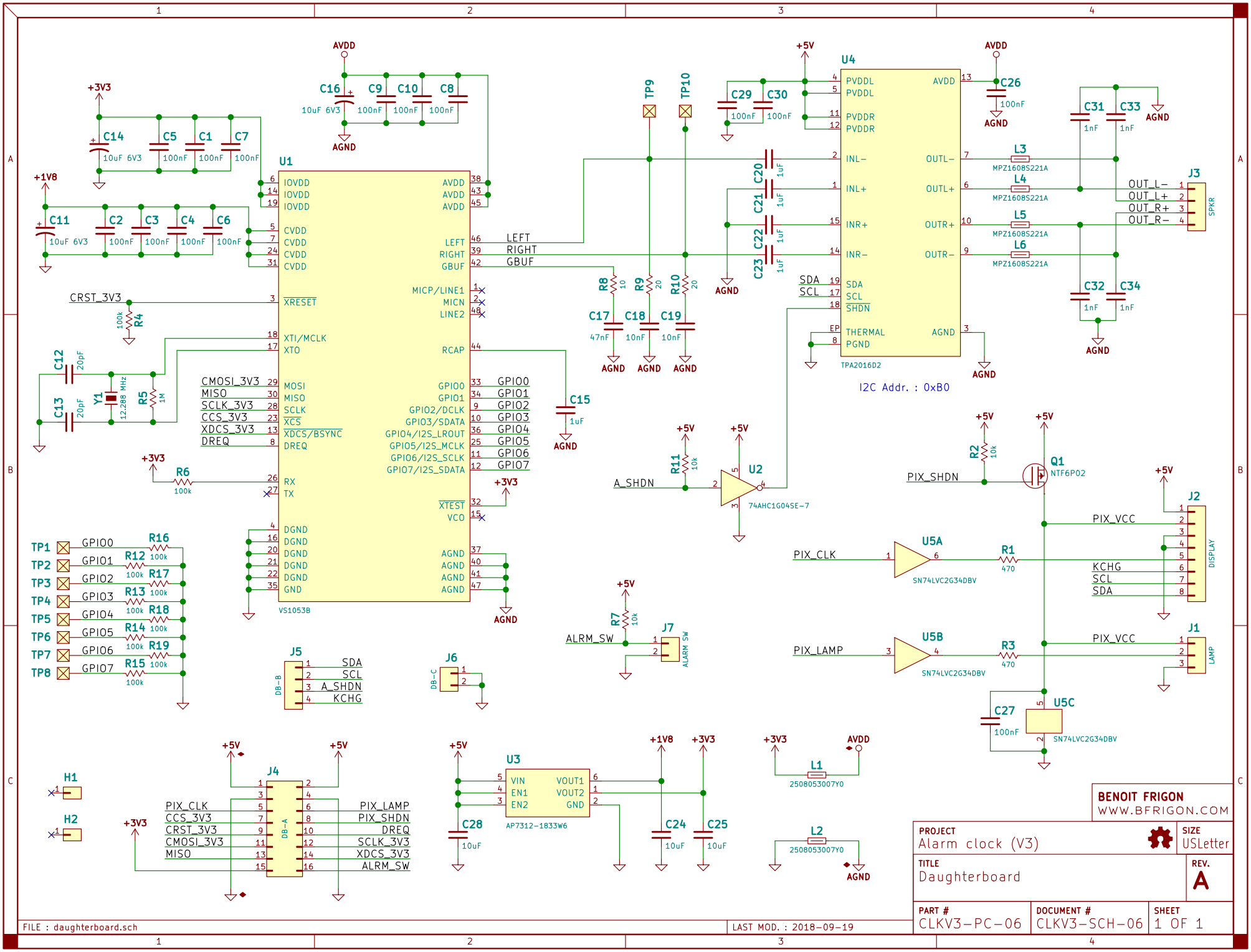
U1
VS1053B
U4
TPA2016D2
I2C Addr. : 0xB0
U2
74AHC1G04SE-7
U5A
U5B
U5C
SN74LVC2G34DBV
Q1
NTF6P02
U3
AP7312-1833W6
J1
J2
J3
J4
J5
J6
J7
H1
H2
TP1
TP2
TP3
TP4
TP5
TP6
TP7
TP8
TP9
TP10
Y1
12.288 MHz
L1
2508053007Y0
L2
2508053007Y0
L3
L4
L5
L6
MPZ1608S221A
AVDD
AGND
+5V
+3V3
+1V8
CRST_3V3
LEFT
RIGHT
GBUF
CMOSI_3V3
MISO
SCLK_3V3
CCS_3V3
XDCS_3V3
DREQ
GPIO0
GPIO1
GPIO2
GPIO3
GPIO4
GPIO5
GPIO6
GPIO7
SDA
SCL
A_SHDN
KCHG
ALRM_SW
PIX_CLK
PIX_LAMP
PIX_SHDN
PIX_VCC
OUT_L−
OUT_L+
OUT_R+
OUT_R−
DISPLAY
SPKR
LAMP
ALARM SW
DB-A
DB-B
DB-C
BENOIT FRIGON
WWW.BFRIGON.COM
PROJECT
Alarm clock (V3)
SIZE
USLetter
TITLE
Daughterboard
REV.
A
PART #
CLKV3-PC-06
DOCUMENT #
CLKV3-SCH-06
SHEET
1 OF 1
FILE : daughterboard.sch
LAST MOD. : 2018-09-19