ITEM NO.	PART NUMBER	MFG.	DESCRIPTION	QTY.
1	CLKV3-JG-02	--	Motherboard assembly JIG	1
2	240-004-BR	E-Z LOK	Threaded insert - Flush - #4-40	1

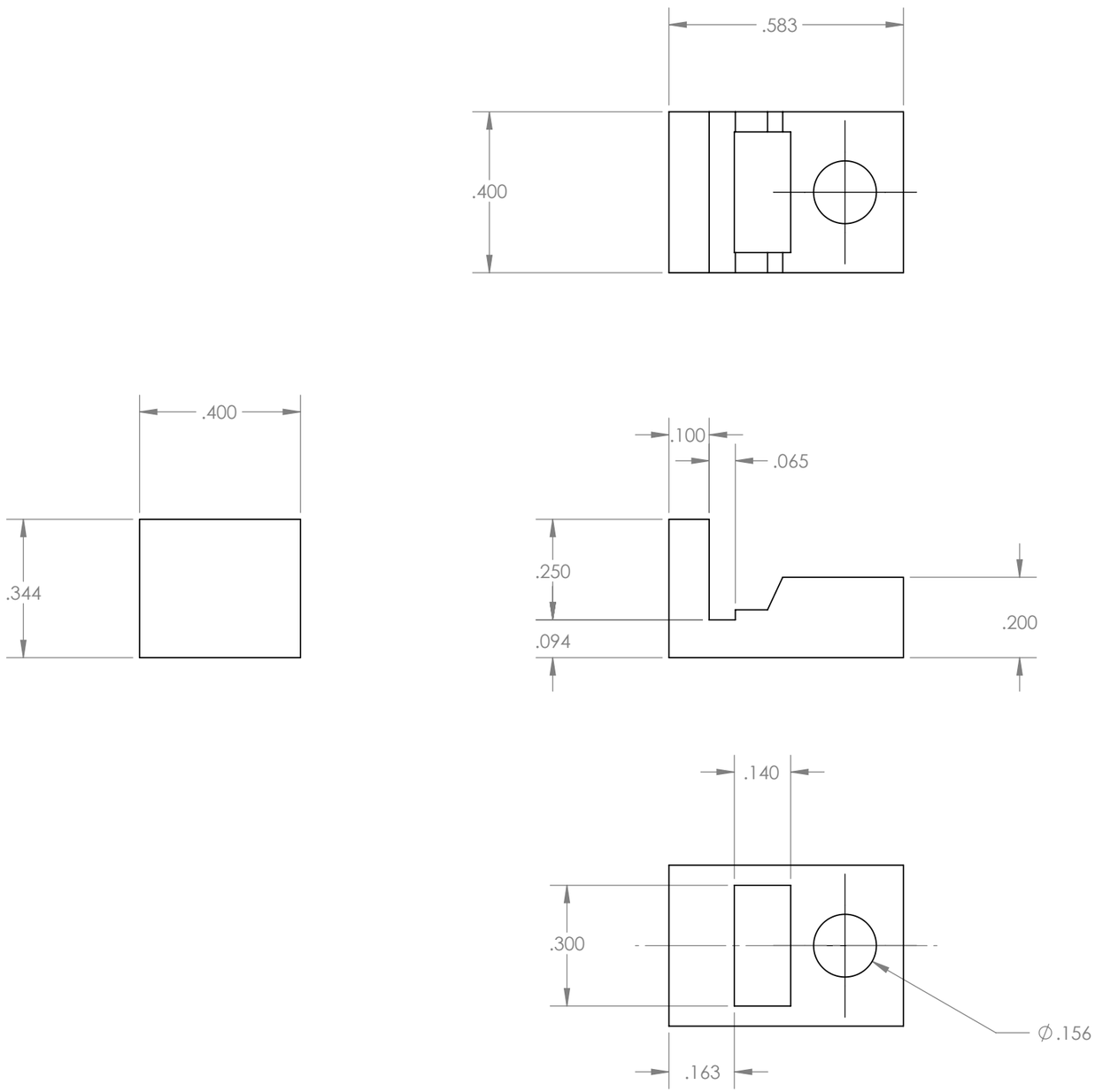

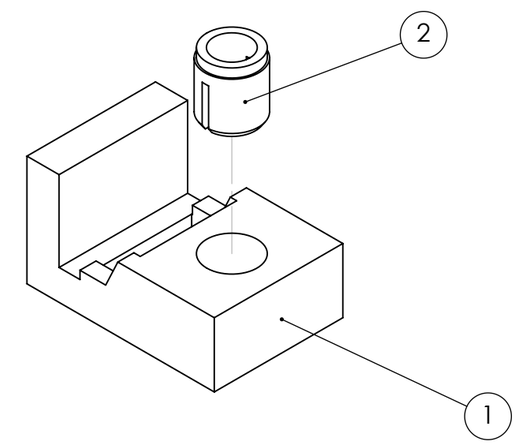

Benoit Frigon
www.frigon.info

NOTES :

PROJECT **ALARM CLOCK V3**			
TITLE **MOTHERBOARD ASSY JIG DIMENSIONS**			REV **A**
PART # **CLKV3-JG-01**	DOCUMENT # **CLKV3-DWG-50**	UNITS **INCHES**	SIZE **B**
MATERIAL **NYLON**		FINISH **WHITE**	
DATE 12/13/2018	**APVD BY :**	**SCALE 3:1**	**SHEET 1 OF 1**

FILE : clkv3-dwg-51_motherboard-assy-jig