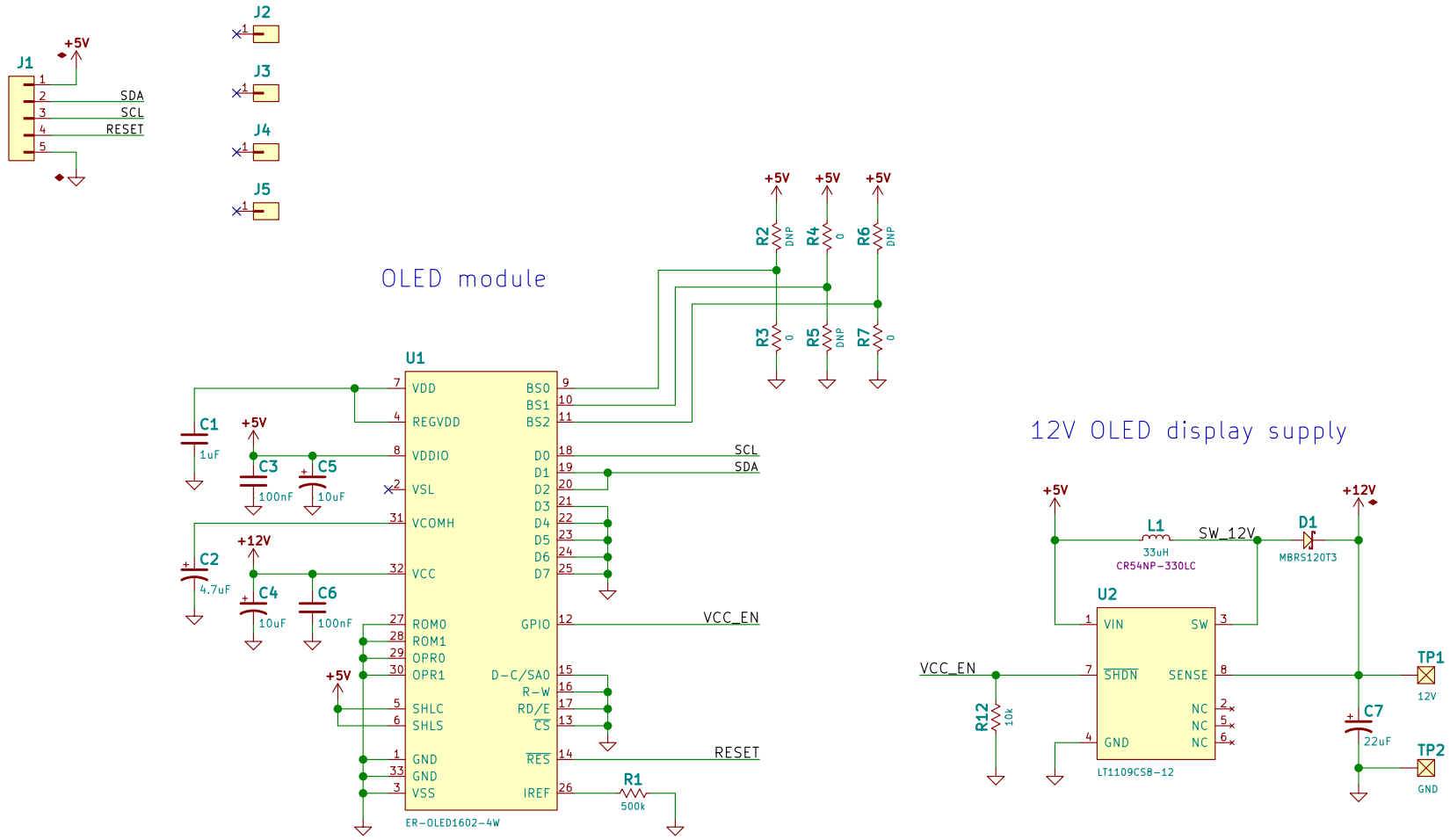

BENOIT FRIGON
WWW.BFRIGON.COM

PROJECT: Alarm clock (V3)		SIZE: USLetter
TITLE: Front panel		REV.: A
PART #: CLKV2-PC-04	DOCUMENT #: CLKV2-SCH-04	SHEET: 1 OF 1

FILE : front-panel.sch

LAST MOD. : 2016-07-11