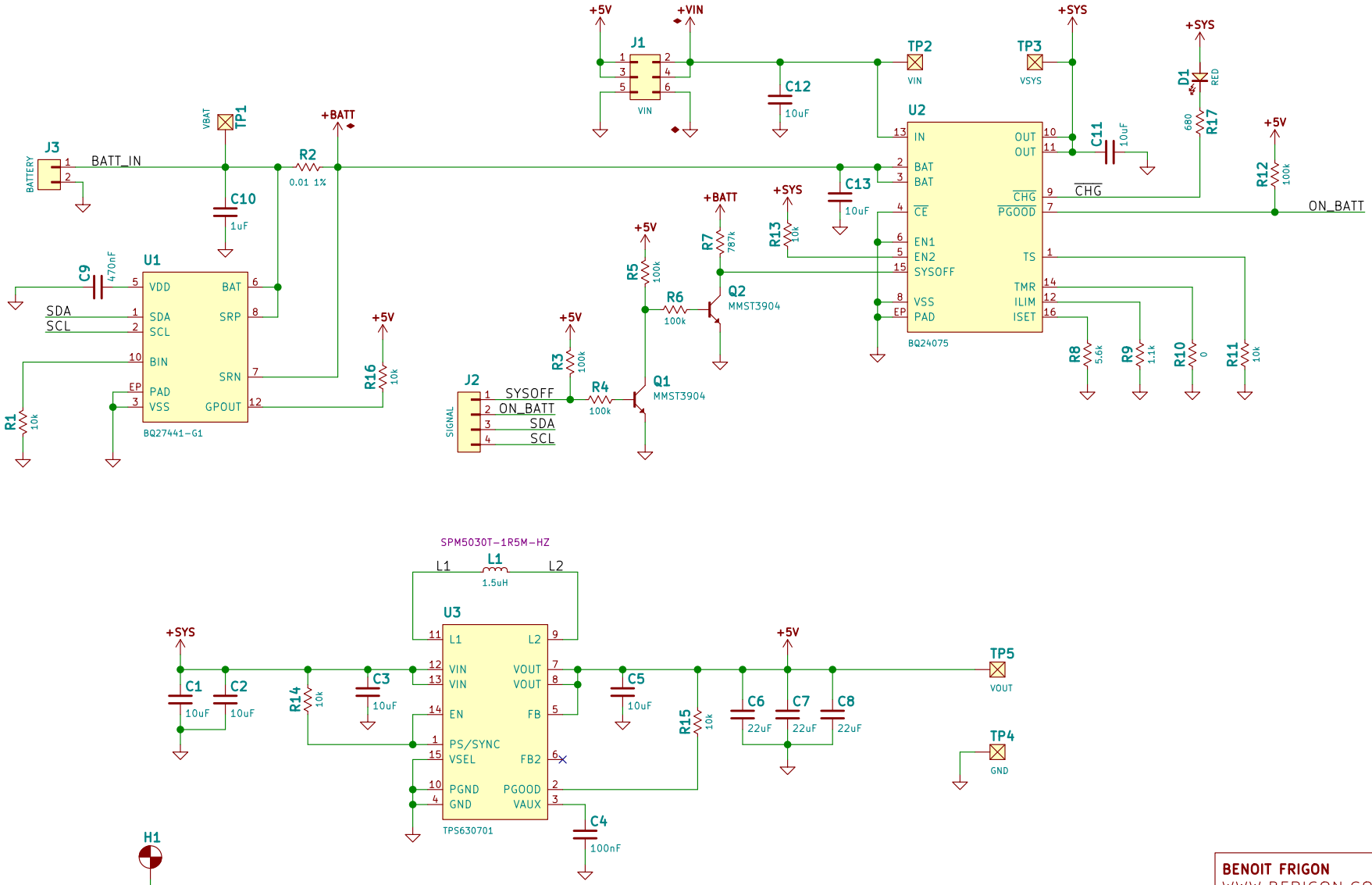

NOTE 1 : C3 and C5 should be a 0603 capacitor and must be located as close as possible to the IC.

BENOIT FRIGON
WWW.BFRIGON.COM

PROJECT: Alarm Clock (V3)		SIZE: USLetter
TITLE: Power supply		REV.: A
PART #: CLKV3-PC-07	DOCUMENT #: CLKV3-SCH-07	SHEET: 1 OF 1

FILE : psu.sch

LAST MOD. : 2018-11-28