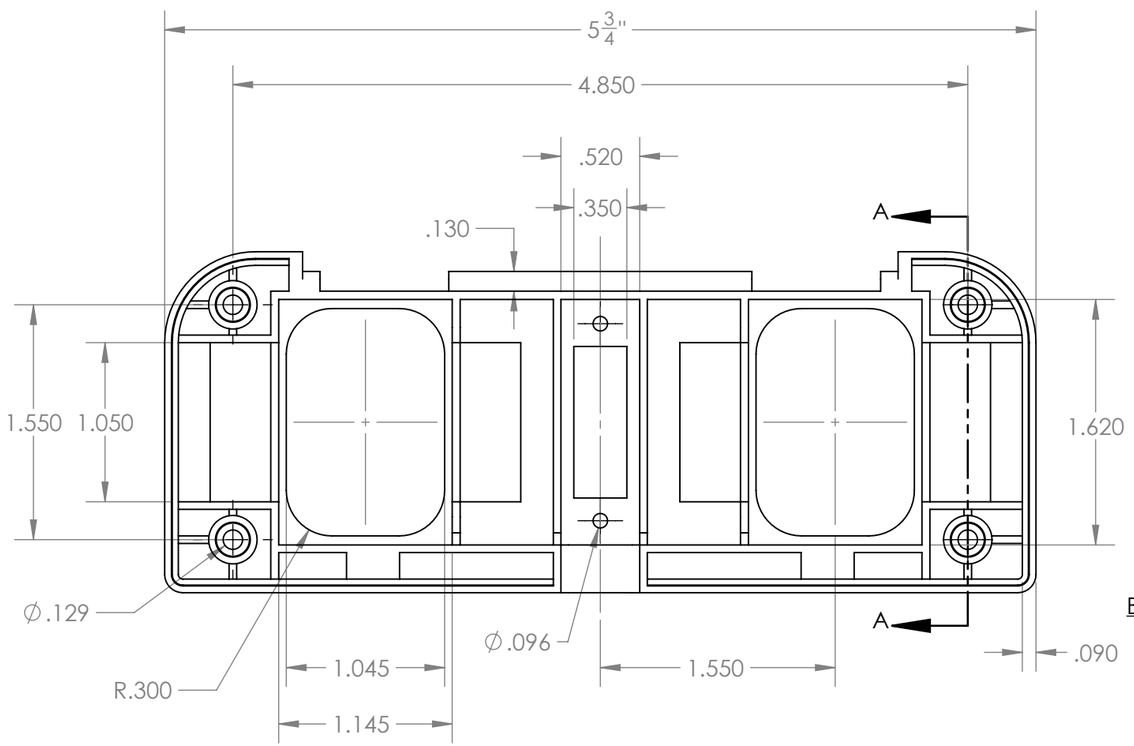

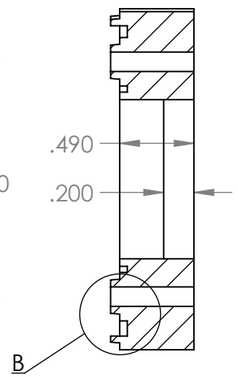

SECTION A-A

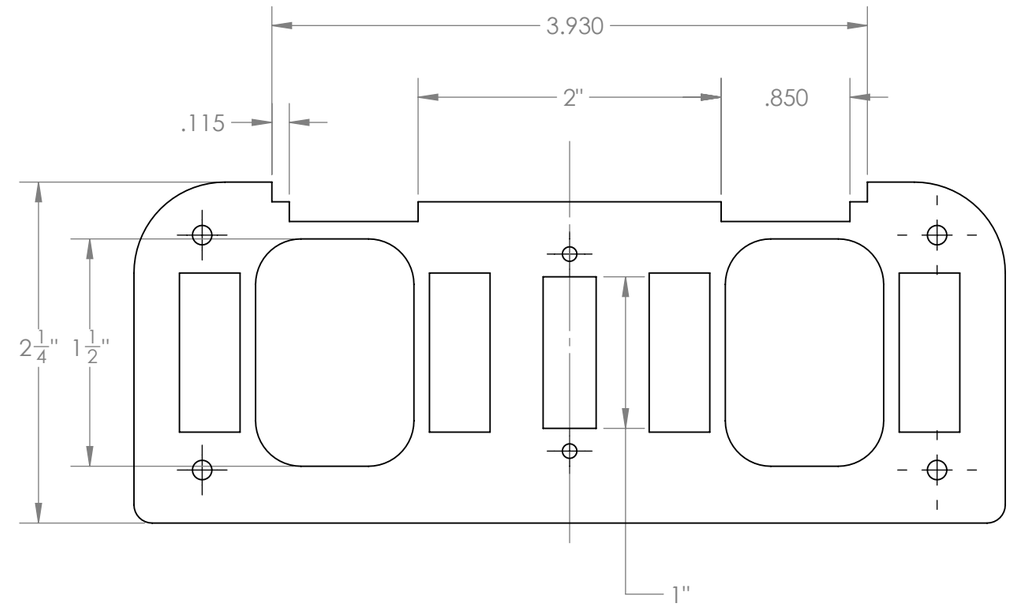

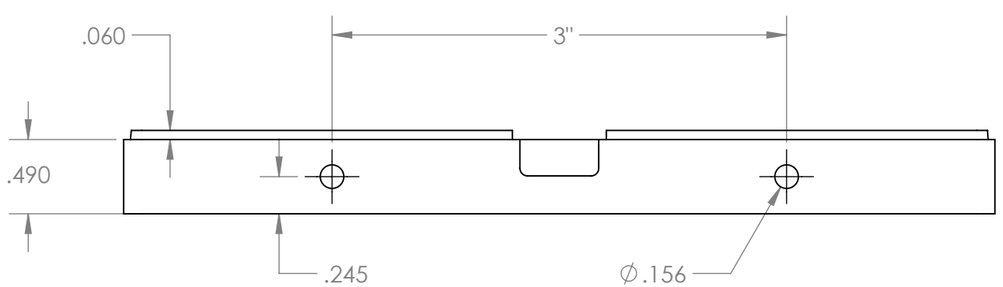

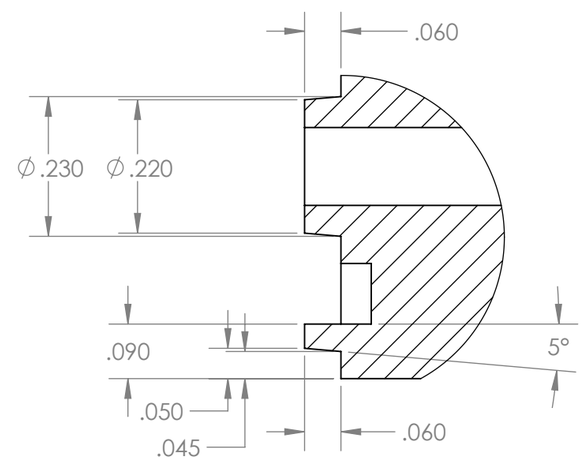

DETAIL B
SCALE 4 : 1

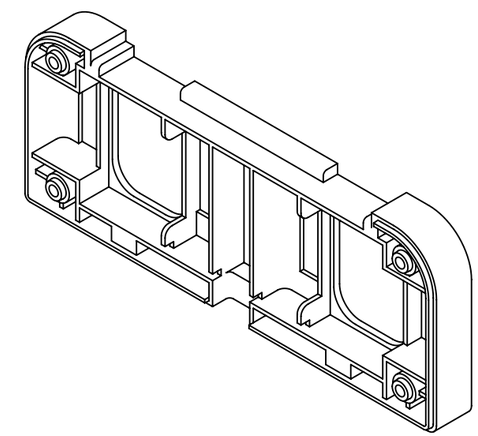

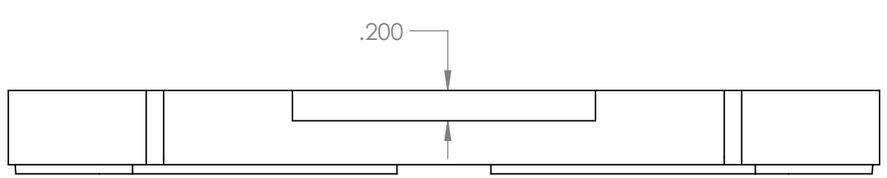

Benoit Frigon
www.bfrigon.com

NOTES :
MATERIAL VOLUME : 1.53 in³

PROJECT: **ALARM CLOCK V3**			
TITLE: **DISPLAY - FRAME - BACK DIMENSIONS**			REV: **A**
PART #: **CLKV3-ML-09**	DOCUMENT #: **CLKV3-DWG-04**	UNITS: **INCHES**	SIZE: **B**
MATERIAL: **NYLON**	FINISH: **BLACK**		
DATE 11/6/2018	**APVD BY :**	**SCALE 1:1**	**SHEET 1 OF 1**

FILE : clkv3-dwg-04_display-frame-back