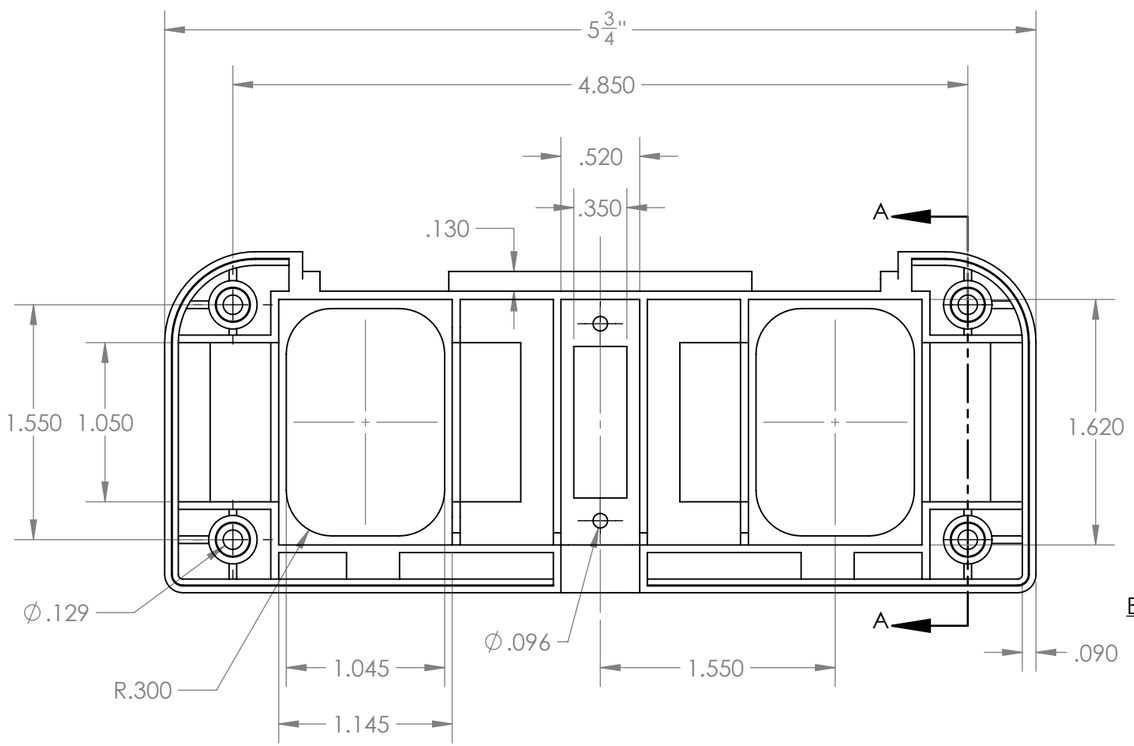

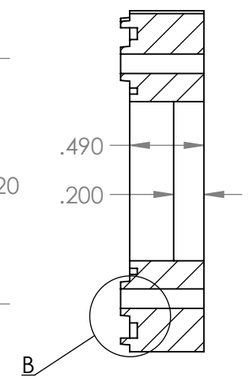

SECTION A-A

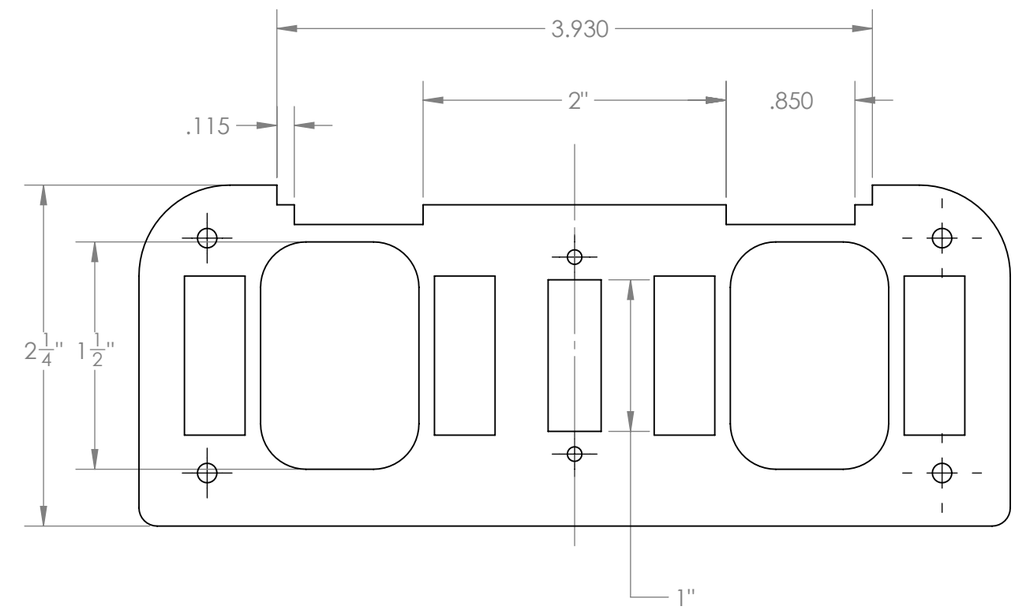

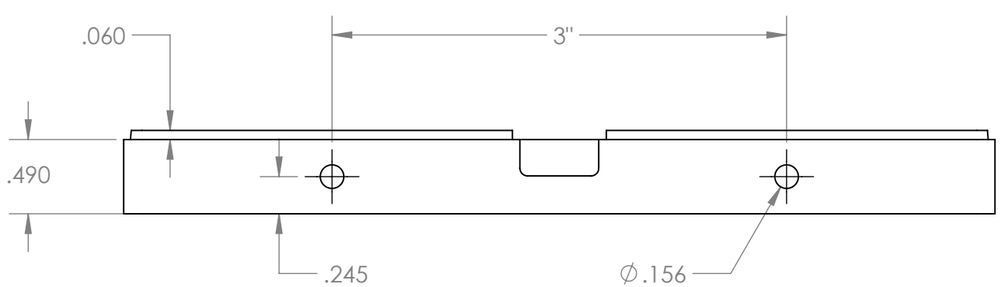

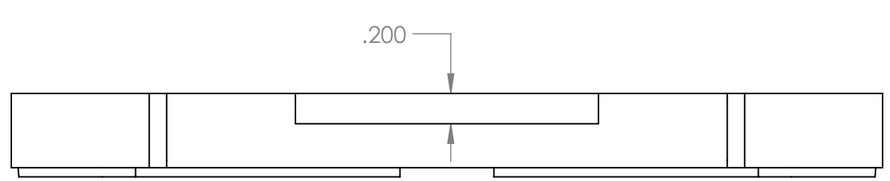

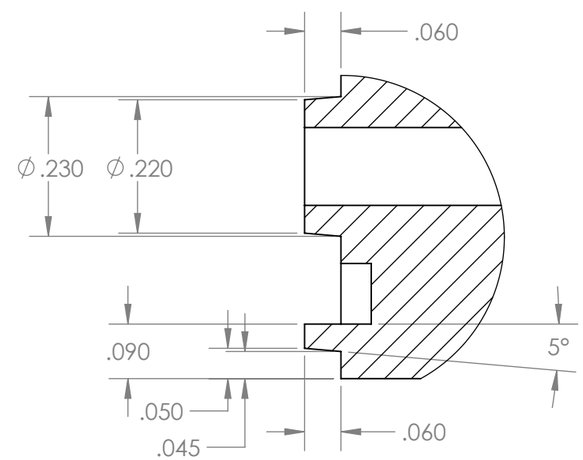

DETAIL B
SCALE 4 : 1

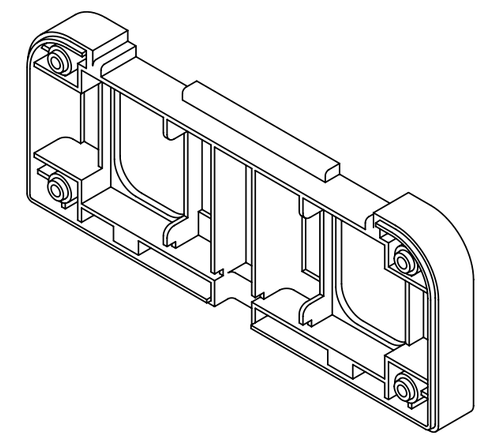

Benoit Frigon
www.frigon.info

NOTES :
MATERIAL VOLUME : 1.53 in³

PROJECT: **ALARM CLOCK V3**			
TITLE: **DISPLAY - FRAME - BACK DIMENSIONS**			REV: **A**
PART #: **CLKV3-ML-09**	DOCUMENT #: **CLKV3-DWG-04**	UNITS: **INCHES**	SIZE: **B**
MATERIAL: **NYLON**		FINISH: **BLACK**	
DATE **12/13/2018**	APVD BY :	SCALE **1:1**	SHEET **1 OF 1**

FILE : clkv3-dwg-04_display-frame-back