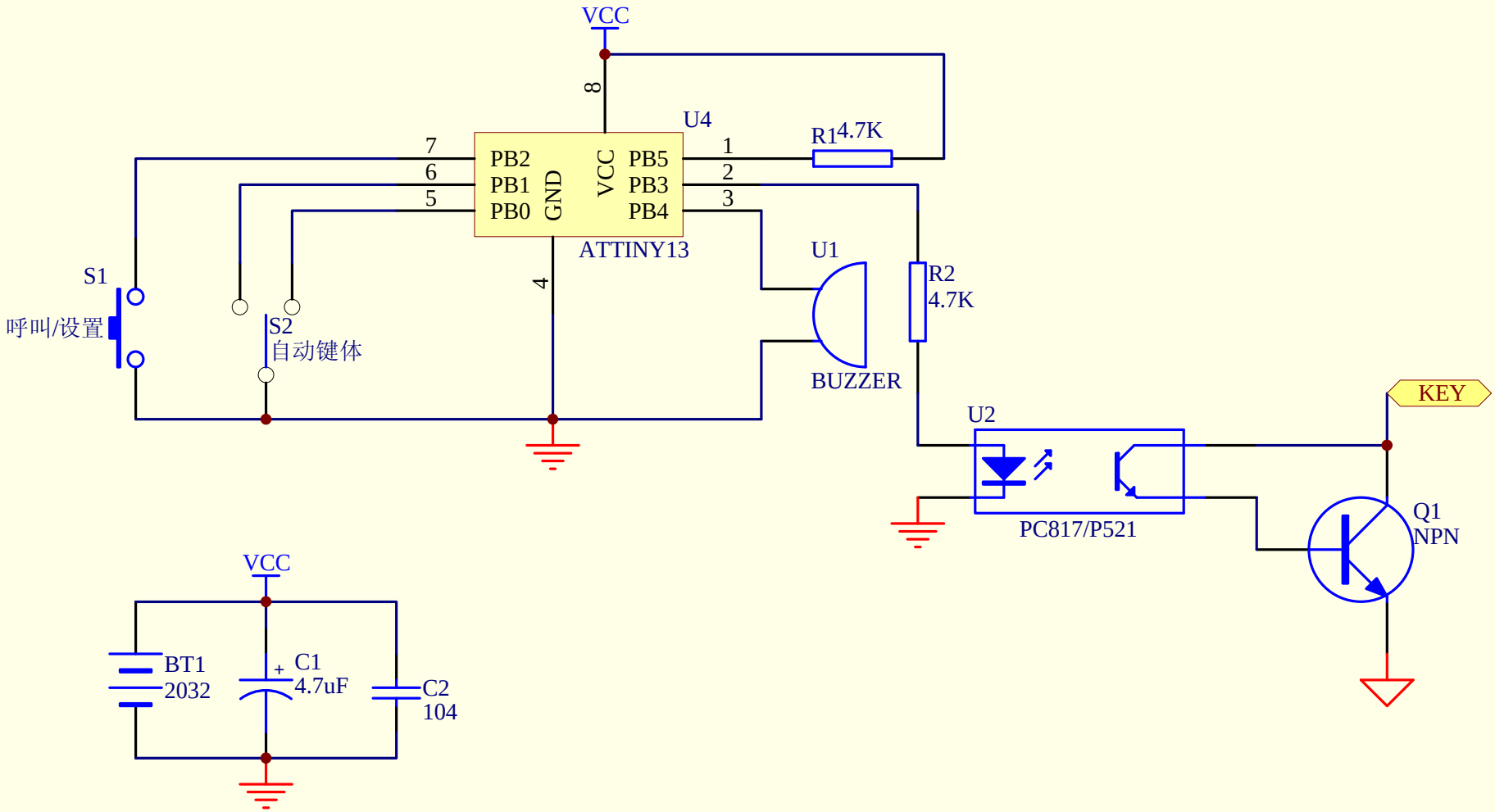

Title	BG4UVR设计的自动键控制器	
Size A4	Number	Revision
Date: 24-Sep-2007	Sheet of	
File: D:\files\Electronics\原理图&PCB\other\TINY13自动键\MyDesign.ddb	Drawn By:	