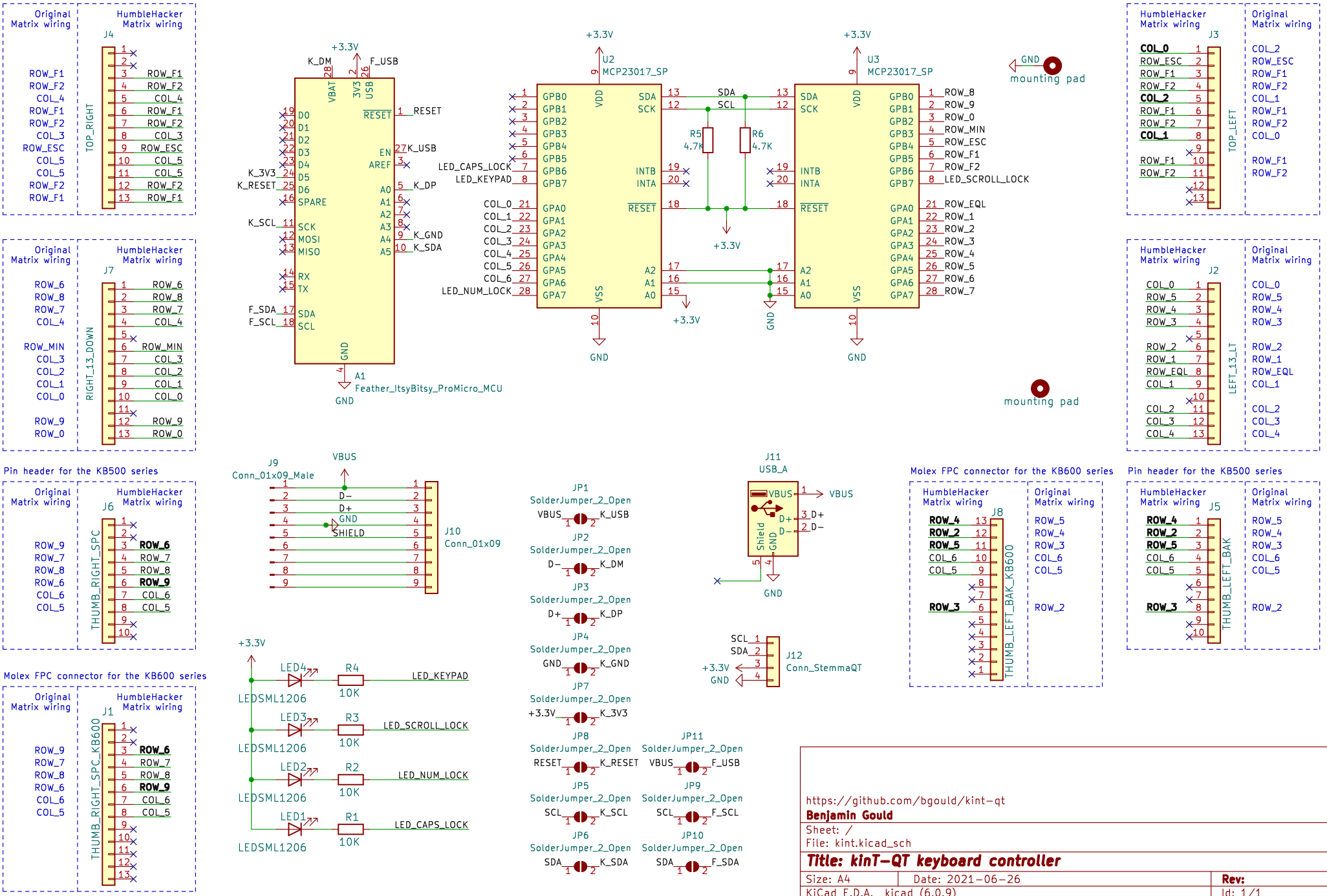
Original Matrix wiring
HumbleHacker Matrix wiring
J4
TOP_RIGHT
ROW_F1
ROW_F2
COL_4
ROW_F1
ROW_F2
COL_3
ROW_ESC
COL_5
COL_5
ROW_F2
ROW_F1
ROW_F1
ROW_F2
COL_4
ROW_F1
ROW_F2
COL_3
ROW_ESC
COL_5
COL_5
ROW_F2
ROW_F1
Original Matrix wiring
HumbleHacker Matrix wiring
J7
RIGHT_13_DOWN
ROW_6
ROW_8
ROW_7
COL_4
ROW_MIN
COL_3
COL_2
COL_1
COL_0
ROW_9
ROW_0
ROW_6
ROW_8
ROW_7
COL_4
ROW_MIN
COL_3
COL_2
COL_1
COL_0
ROW_9
ROW_0
Pin header for the KB500 series
Original Matrix wiring
HumbleHacker Matrix wiring
J6
THUMB_RIGHT_SPC
ROW_9
ROW_7
ROW_8
ROW_6
COL_6
COL_5
ROW_6
ROW_7
ROW_8
ROW_9
COL_6
COL_5
Molex FPC connector for the KB600 series
Original Matrix wiring
HumbleHacker Matrix wiring
J1
THUMB_RIGHT_SPC_KB600
ROW_9
ROW_7
ROW_8
ROW_6
COL_6
COL_5
ROW_6
ROW_7
ROW_8
ROW_9
COL_6
COL_5
+3.3V
K_DM
F_USB
VBAT
3V3
USB
D0
D1
D2
D3
D4
D5
D6
SPARE
SCK
MOSI
MISO
RX
TX
SDA
SCL
GND
RESET
EN
AREF
A0
A1
A2
A3
A4
A5
RESET
K_USB
K_DP
K_GND
K_SDA
K_3V3
K_RESET
K_SCL
F_SDA
F_SCL
A1
Feather_ItsyBitsy_ProMicro_MCU
GND
+3.3V
U2
MCP23017_SP
GPB0
GPB1
GPB2
GPB3
GPB4
GPB5
GPB6
GPB7
GPA0
GPA1
GPA2
GPA3
GPA4
GPA5
GPA6
GPA7
VDD
VSS
SDA
SCK
INTB
INTA
RESET
A2
A1
A0
LED_CAPS_LOCK
LED_KEYPAD
COL_0
COL_1
COL_2
COL_3
COL_4
COL_5
COL_6
LED_NUM_LOCK
R5
4.7K
R6
4.7K
+3.3V
GND
+3.3V
U3
MCP23017_SP
ROW_8
ROW_9
ROW_0
ROW_MIN
ROW_ESC
ROW_F1
ROW_F2
LED_SCROLL_LOCK
ROW_EQL
ROW_1
ROW_2
ROW_3
ROW_4
ROW_5
ROW_6
ROW_7
GND
mounting pad
mounting pad
HumbleHacker Matrix wiring
Original Matrix wiring
J3
TOP_LEFT
COL_0
ROW_ESC
ROW_F1
ROW_F2
COL_2
ROW_F1
ROW_F2
COL_2
ROW_ESC
ROW_F1
ROW_F2
COL_1
ROW_F1
ROW_F2
COL_0
ROW_F1
ROW_F2
HumbleHacker Matrix wiring
Original Matrix wiring
J2
LEFT_13_LT
COL_0
ROW_5
ROW_4
ROW_3
ROW_2
ROW_1
ROW_EQL
COL_1
COL_2
COL_3
COL_4
COL_0
ROW_5
ROW_4
ROW_3
ROW_2
ROW_1
ROW_EQL
COL_1
COL_2
COL_3
COL_4
J9
Conn_01x09_Male
VBUS
D−
D+
GND
SHIELD
J10
Conn_01x09
JP1
SolderJumper_2_Open
VBUS
K_USB
JP2
SolderJumper_2_Open
D−
K_DM
JP3
SolderJumper_2_Open
D+
K_DP
JP4
SolderJumper_2_Open
GND
K_GND
JP7
SolderJumper_2_Open
+3.3V
K_3V3
JP8
SolderJumper_2_Open
RESET
K_RESET
JP5
SolderJumper_2_Open
SCL
K_SCL
JP6
SolderJumper_2_Open
SDA
K_SDA
JP11
SolderJumper_2_Open
VBUS
F_USB
JP9
SolderJumper_2_Open
SCL
F_SCL
JP10
SolderJumper_2_Open
SDA
F_SDA
J11
USB_A
VBUS
D+
D−
Shield
GND
VBUS
D+
D−
GND
J12
Conn_StemmaQT
SCL
SDA
+3.3V
GND
+3.3V
LED4
LEDSML1206
R4
10K
LED_KEYPAD
LED3
LEDSML1206
R3
10K
LED_SCROLL_LOCK
LED2
LEDSML1206
R2
10K
LED_NUM_LOCK
LED1
LEDSML1206
R1
10K
LED_CAPS_LOCK
Molex FPC connector for the KB600 series
HumbleHacker Matrix wiring
Original Matrix wiring
J8
THUMB_LEFT_BAK_KB600
ROW_4
ROW_2
ROW_5
COL_6
COL_5
ROW_3
ROW_5
ROW_4
ROW_3
COL_6
COL_5
ROW_2
Pin header for the KB500 series
HumbleHacker Matrix wiring
Original Matrix wiring
J5
THUMB_LEFT_BAK
ROW_4
ROW_2
ROW_5
COL_6
COL_5
ROW_3
ROW_5
ROW_4
ROW_3
COL_6
COL_5
ROW_2
https://github.com/bgould/kint-qt
Benjamin Gould
Sheet: /
File: kint.kicad_sch
Title: kinT-QT keyboard controller
Size: A4
Date: 2021-06-26
Rev:
KiCad E.D.A. kicad (6.0.9)
Id: 1/1