BOILER MOUNTINGS

INTODUCTION TO BOILER

Definition:

- ✓ A boiler is a closed vessel in which water is converted in to steam by burning of fuel in presence of air at desired temperature, pressure and at desired mass flow rate.
- ✓ According to the Indian Boiler Act 1923, a boiler is a closed pressure vessel with capacity more than 23 liters and used for generating steam under pressure and includes all the mountings fitted to a closed vessel.
- ✓ According to American society of Mechanical Engineers (A.S.M.E.), a steam generator or a boiler is defined as "a combination of apparatus for producing, finishing or recovering heat together with the apparatus for transferring the heat so made available to the fluid being heated and vaporized.

PRINCIPAL OF WORKING

In case of boiler, any type of fuel burn in presence of air and form flue gases which are at very high temperature (hot fluid). The feed water at atmospheric pressure and temperature enters the system from other side (cold fluid). Because of exchanges of heat between hot and cold fluid (water) temperature raises and it form steam. The flue gases (hot fluid) temperature decreases and at lower temperature hot fluid is thrown in to the atmosphere via stack/chimney.

FUNCTION OF A BOILER

The steam generated is employed for the following purposes:

- ➢ Used in steam turbines to develop electrical energy.
- ➢ Used to run steam engines.
- ➢ In the textile industries, sugar mills or in chemical industries as a cogeneration plant.
- ➢ Heating the buildings in cold weather.
- ➢ Producing hot water for hot water supply.

IBR AND NON-IBR BOILERS

- ✓ Boiler generating steam at working pressure below 10 bar and having water storage capacity less than 22.75 liters are called non-IBR boilers. (INDIAN BOILER REGULATION).
- ✓ Boilers outside these limits are covered by the IBR and have to observe certain specified conditions before being operated.

CLASSIFICATION OF BOILERS

The different ways to classify the boilers are as follows

1. According to location of boiler shell axis

- Horizontal (Lancashire boiler, Locomotive boiler, Babcock and Wilcox etc.)
- Vertical (Cochran boiler, vertical boiler etc.)
- Inclined boilers

When the axis of the boiler shell is horizontal the boiler is called horizontal boiler. If the axis is vertical, the boiler is called vertical boiler and if the axis of the boiler is inclined it is known as inclined boiler.

2. According to the flow medium inside the tubes

- Fire tube (Lancashire, Locomotive, Cochran and Cornish boiler.)
- Water tube boilers (Simple vertical boiler, Babcock and Wilcox boiler.)

The boiler in which hot flue gases are inside the tubes and water is surrounding the tubes is called fire tube boiler. When water is inside the tubes and the hot gases are outside the boiler is called water tube boiler.

3. According to boiler pressure

According to pressure of the steam raised the boilers are classified as follows

- Low pressure (Below 80 bar) [Cochran and Cornish boiler, Lancashire and locomotive boiler]
- High pressure boilers (> 80 bar) [Babcock and Wilcox boiler]

4. According to the draft used:

- Natural draft (Simple vertical boiler, Lancashire boiler.)
- Artificial draft boilers (Babcock and Wilcox boiler, Locomotive boiler.)

Boilers need supply of air for combustion of fuel. If the circulation of air is provided with the help of a chimney, the boiler is known as natural draft boiler. When either a forced draft fan or an induced draft fan or both are used to provide the flow of air in the boiler is called artificial draft boiler.

5. According to method of water circulation:

- Natural circulation (Babcock and Wilcox boiler, Lancashire boiler.)
- Forced circulation (Velox boiler, Lamont boiler, Loffler boiler.)

If the circulation of water takes place due to difference in density caused by temperature of water, the boiler is called natural circulation boiler. When the circulation is done with the help of a pump the boiler is known as forced circulation boiler.

6. According to furnace position:

- Internally fired (Simple vertical boiler Lancashire boiler, Cochran boiler.)
- Externally fired boilers (Babcock and Wilcox boiler.)

When the furnace of the boiler is inside its drum or shell, the boiler is called internally fired boiler. If the furnace is outside the drum the boiler is called externally fire boiler.

7. According to Fuel Used.

- Solid
- Liquid
- Gaseous
- Electrical
- Nuclear energy fuel boilers

The boiler in which heat energy is obtained by the combustion of solid fuel like coal or lignite is known as solid fuel boiler. A boiler using liquid or gaseous fuel for burning is known as liquid or gaseous fuel boiler. Boilers in which electrical or nuclear energy is used for generation of heat are respectively called as electrical energy headed boilers and nuclear energy heated boiler.

8. According to number of tubes

- Single tube (Cornish boiler, Vertical boiler.)
- Multi-tube boiler (Lancashire boiler, Locomotive boiler, Babcock and Wilcox.)

A boiler having only one fire tube or water tube is called a single, tube boiler. The boiler having two or more, fire or water tubes is called multi-tube boiler.

9. According to boiler mobility

- Stationary (Lancashire, Babcock and Wilcox boiler, Vertical boiler.)
- Portable (Locomotive boiler, Marine boiler)
- Marine boilers

When the boiler is fixed at one location and cannot be transported easily it is known as stationary boiler. If the boiler can be moved from one location to another it is known as portable boiler. The boiler which work on surface of water are called marine boilers.

FACTORS AFFECTING THE SELECTION OF A BOILER

One has to send the technical details to the manufacturer to purchase a boiler. The technical details that are used to give information about a particular boiler include the following things:

- Size of drum (Diameter and Length)
- Rate of steam generation (kg/hr)
- Heating surface (Square meters)
- Working pressure(Bar)
- Number of tubes /drum
- Type of boiler
- Manufacture of boiler
- Initial cost
- Quality of steam
- Repair and inspection facility

BOILER MOUNTINGS

The boiler mountings are the different fittings and devices which are mounted on a boiler shell for proper functioning and safety.

(A) Mountings for safety

1. Safety valve (02 Nos.)
2. High pressure and low water safety valve on Lancashire and Cornish boiler (01 each)
3. Water level indicator (02 Nos.)
4. Fusible plug (01 No.)

(B) Mountings for controls

1. Pressure gauge (01 No.)
2. Steam stop valve (01 No.)
3. Feed check valve (01 No.)
4. Blow off cock (01 No.)
5. Man hole (01 No.)
6. Mud box (01 No.)

SAFETY VALVE

Safety valve is located on the top of the boiler. They guard the boiler against the excessive high pressure of steam inside the drum. If pressure exceeds the working pressure then the safety valve allows to blow off a certain quantity of steam to the atmosphere, and the pressure falls in the drum.

There are four types of safety valves.

1. Dead-weight safety valves

Figure 01 shows the schematic of a dead weight safety valve. It is similar to dead weight (whistle) loaded on a pressure cooker and functions in a similar way. A gunmetal valve rests on gunmetal seat. The gunmetal seat is mounted on a steel steam pipe. The valve is fastened to a weight carrier. The dead weight is in the form of cylindrical discs are placed on the carrier so it acts downward. When the force due to steam pressure exceeds the total dead weight acting downward, the valve lifts up from the seat and some quantity of steam left the atmosphere, thus reducing the steam pressure in the boiler shell, and the valve is again closed. The dead weight safety valve is used on stationary boilers.

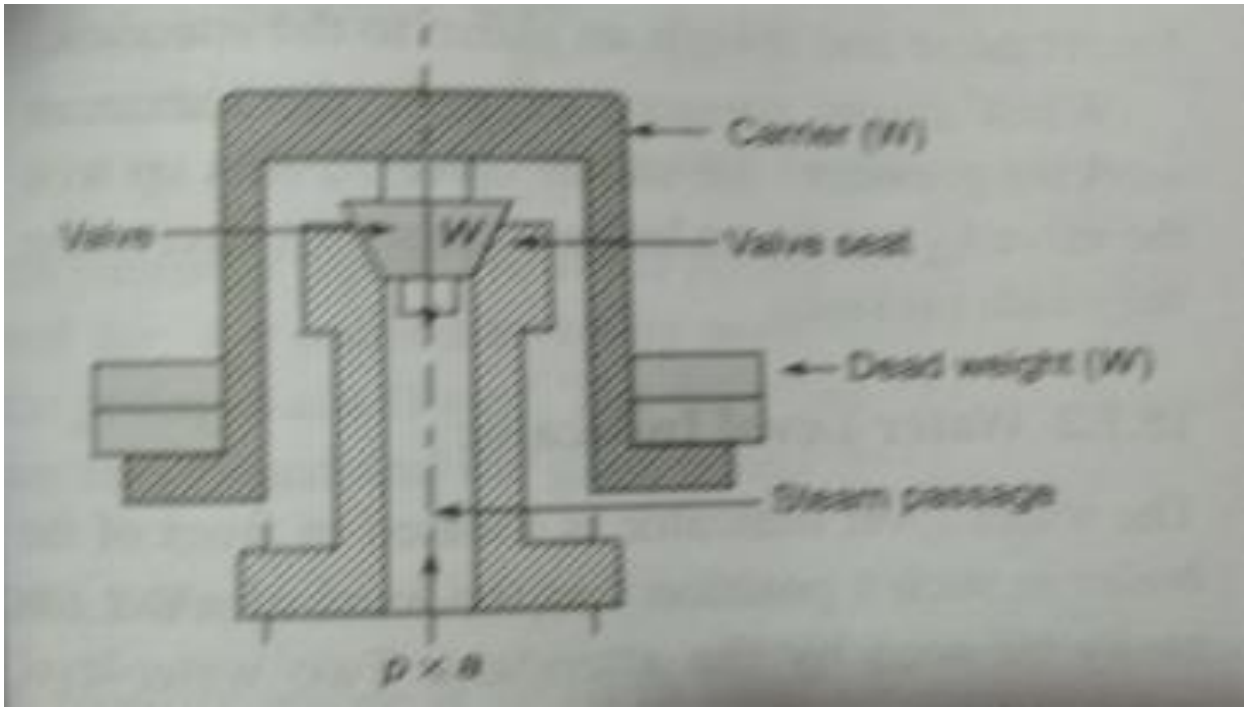

Fig.01: Dead weight safety valve

2. Spring- loaded safety valve

   The dead weight safety valve cannot be used on locomotive and marine boilers. The spring loaded safety valve is used on locomotive marines and on high –pressure valve. Fig shows the valve close the steam passages under the action of a central helical spring. When the upward force of steam exceeds the down ward spring tension, the valves open and some steam escape to the atmosphere. Thus lower the steam pressure in the boiler and the valves are closed again under the spring force.

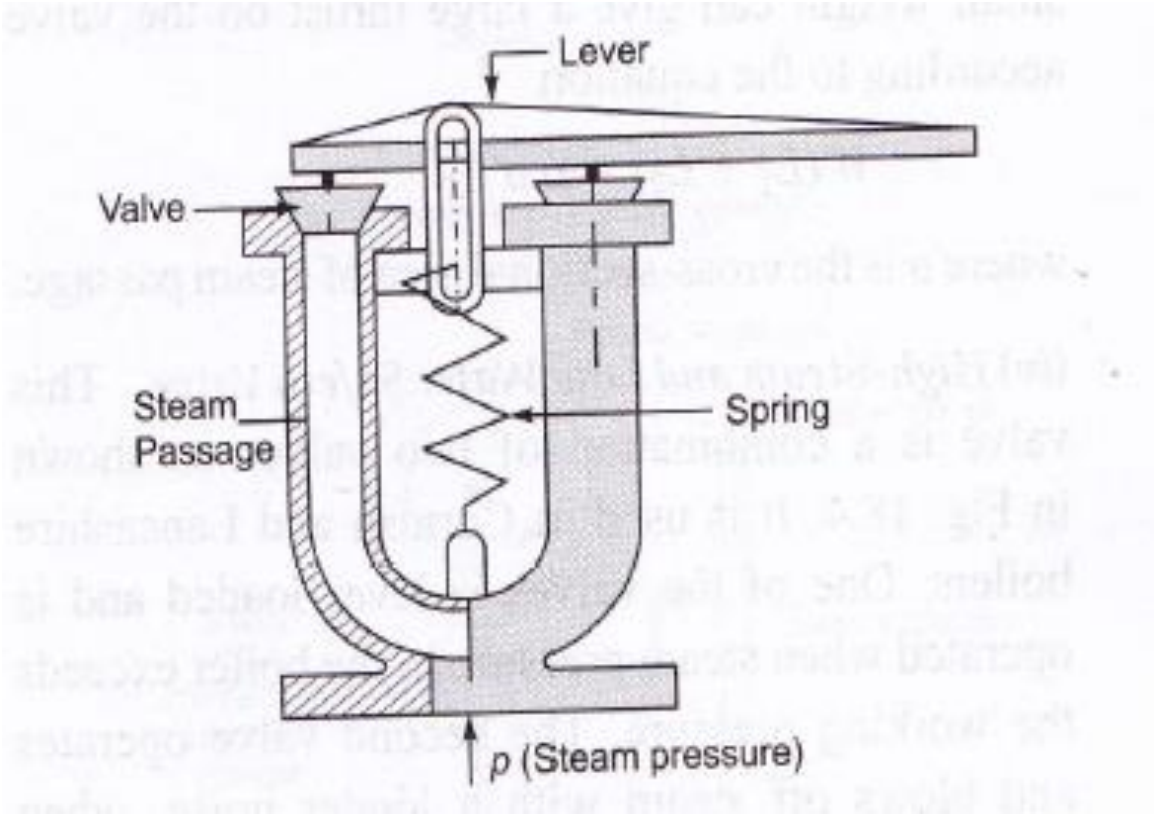

Fig.02: Spring –loaded safety valve

3. Lever-loaded safety valve

   The fig. shows the lever- loaded spring safety valve, the body of valve is fastened on the top of the boiler shell. A gunmetal valve is placed on the steam passage formed in the casing. A cast iron lever attached to a fulcrum on one end and loaded by weight on the other end keeps the valve on the seat in a closed position.

   When the upward force due to steam pressure exceeds the load on the valve, the valve opens, and allows some quantity of steam to escape. The pressure of steam in the boiler falls and the valve again rests on the seat.

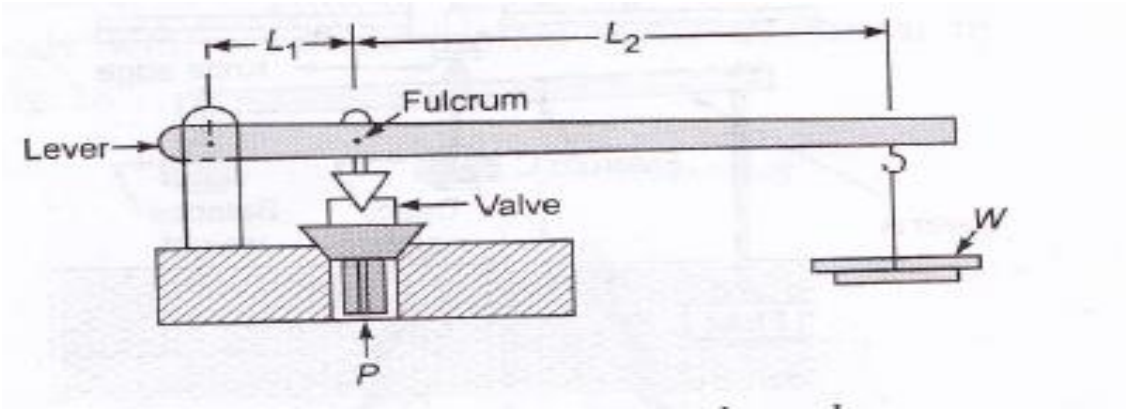

Fig.03: Lever-loaded safety valve

4. High steam and low water safety valve

This valve is combination of two valves as shown in fig 4. It is used in Cornish and Lancashire boilers. One of the valves is lever loaded and is operated when steam pressure in the boiler exceeds the working pressure. The second valve operates and blows off steam with a louder noise, when water level in the boiler falls below the normal level.

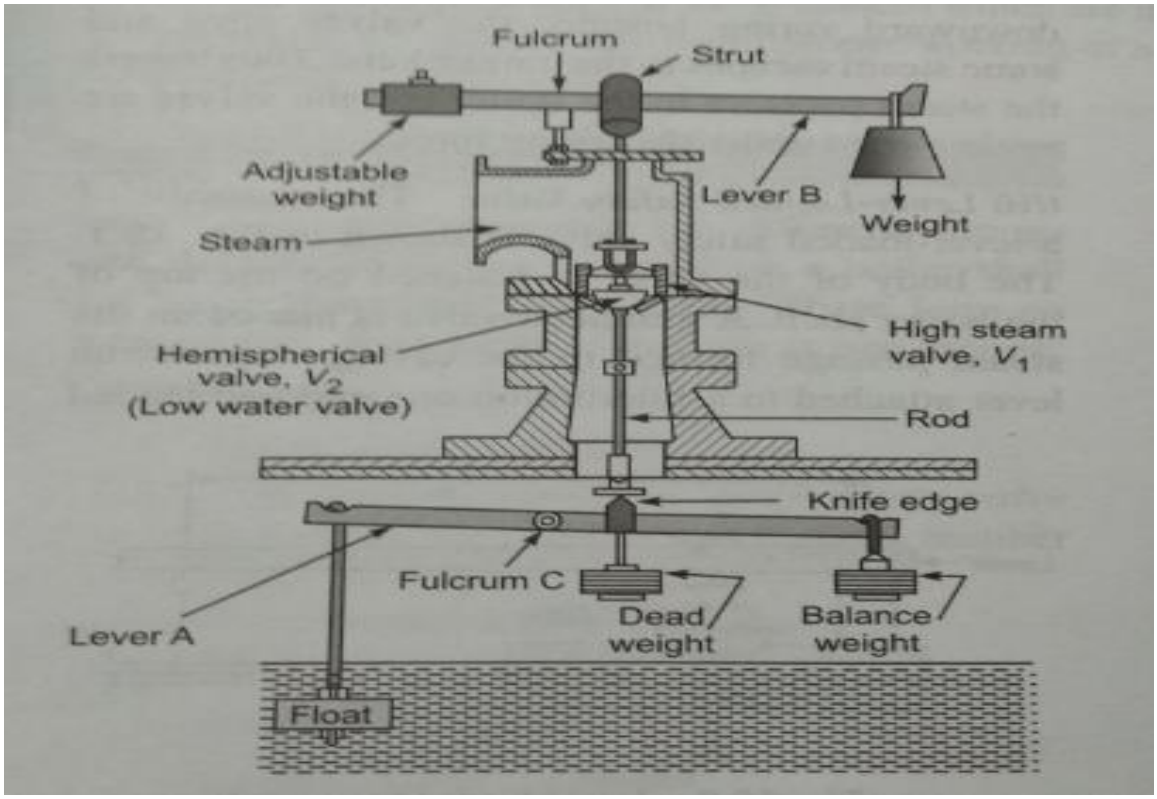

Fig.04: High steam and low steam safety valve

WATER LEVEL INDICATOR

The water level indicator is located in front of the boiler in such a position that the level of water can easily be seen by the attendant. Two water level indicators are used on all boilers. A water level indicator consists of a metal tube and a strong glass tube with markings. The upper and lower ends are connected to two gunmetal hollow pipes. The drain cock is to ensure the water and steam cock are clear. During operation steam cock and water cock remains open while the drain cock remains close. During the normal operation, the two balls provided inside the gunmetal pipe remains in position as shown in figure , hence the water can reach the glass gauge and its level can be seen.

In case the glass gauge breaks accidently, the water and steam simultaneously rush out through the gunmetal pipes. The force is exerted on two balls and they are carried away by water and steam and the passage are closed. The water and the steam cocks are then closed and the glass gauge is replaced.

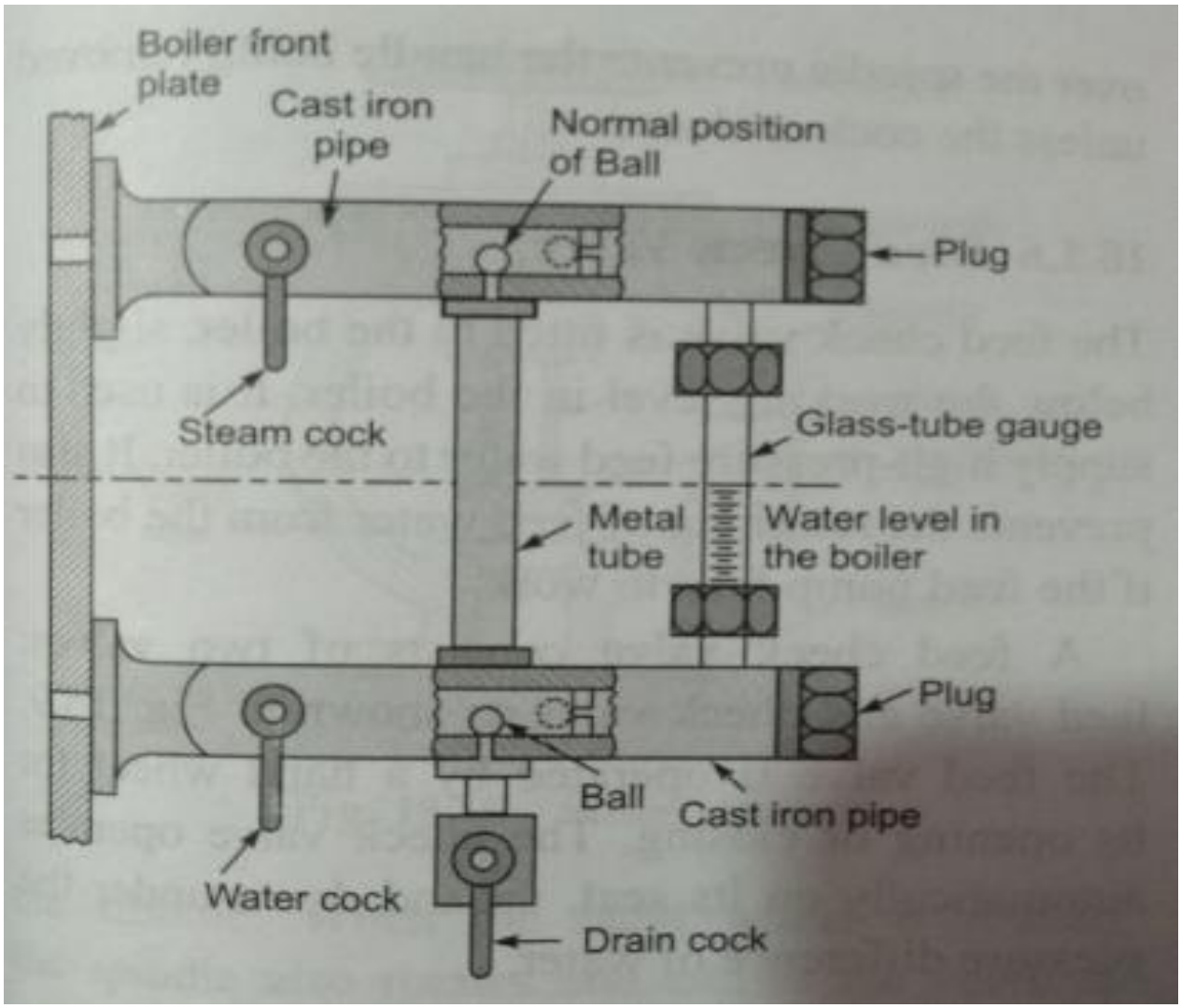

Fig.05: Water level indicator.

PRESSURE GAUGE

A pressure gauge is fitted in front of the boiler in such a position that the operator can conveniently read it. It read the pressure of steam in the boiler and is connected to the steam space by a siphon tube.

The most commonly used gauge is the bourdon pressure gauge. Fig 6. Illustrates the bourdon pressure gauge. It consists of an elliptical spring bourdon tube. One end of the tube is connected to the siphon tube and other end is connected by levers and gears to pointer.

When fluid pressure acts on the bourdon tube, it tries to make its cross section change from elliptical to circular. In this process, the lever end of the tube moves out as indicated by an arrow. The tube movement is magnified by the mechanism and given to pointer to move over a circular scale indicating the pressure.

The siphon tube is shown in Fig.07. It connects the steam space of the boiler to the bourdon gauge is filled with water in order to avoid the effect of high temperature steam on the gauge components. The steam pressure is transferred by water to the bourdon gauge.

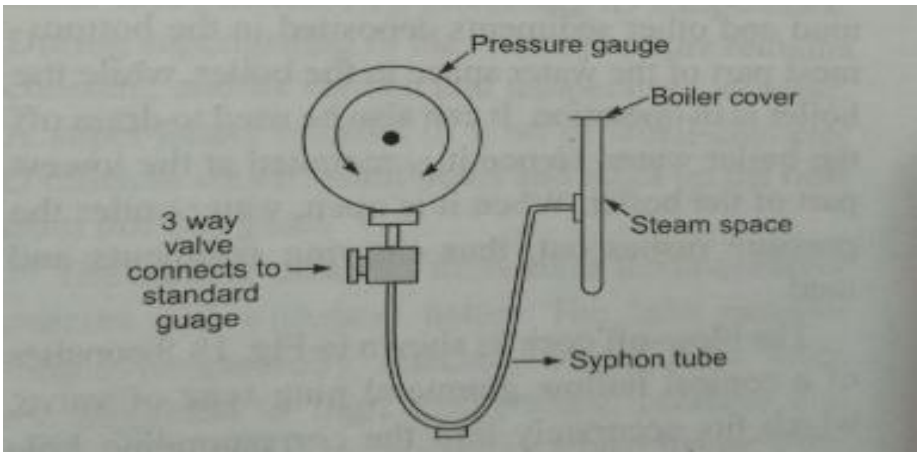

Fig.06: Bourdon pressure gauge

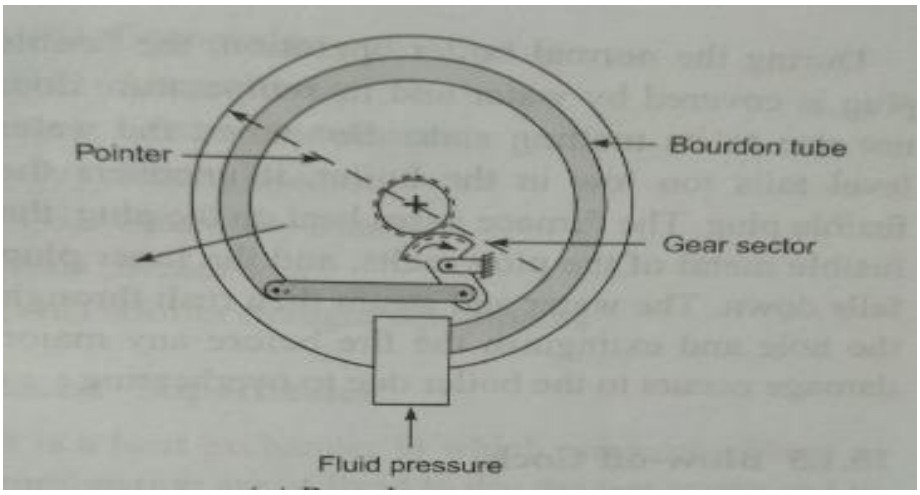

Fig.07: pressure gauge with siphon tube.

FUSIBLE PLUG

It is very important safety device which protect the fire tube boiler shell against overheating. It is located just above the furnace in the boiler. It consists of a gun metal body with a fusible molten metal as shown in fig.

During the operation the fusible plug is covered by water and its temperature does not raise melting state. When water level falls it uncovers the fusible plug. It heats up and falls down the water and steam rush through the hole and extinguish the fire before any major damage.

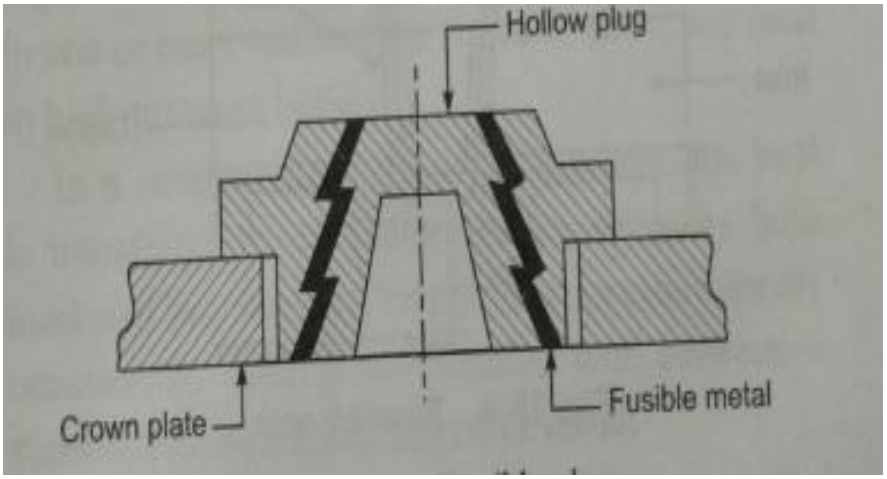

Fig. 08: Fusible plug

BLOW-OFF COCK

The function of the blow off cock is to discharge mud and other sediments deposited in the bottom most part of the water space in the boiler, while the boiler is in operation. It can also be used for drain off boiler water. It consists of conical hollow gunmetal plug type of valve. The flow of water through the cock can be stopped by rotating the plug valve in such a way that its solid side comes in the line of the hole in the casing as shown in figure.

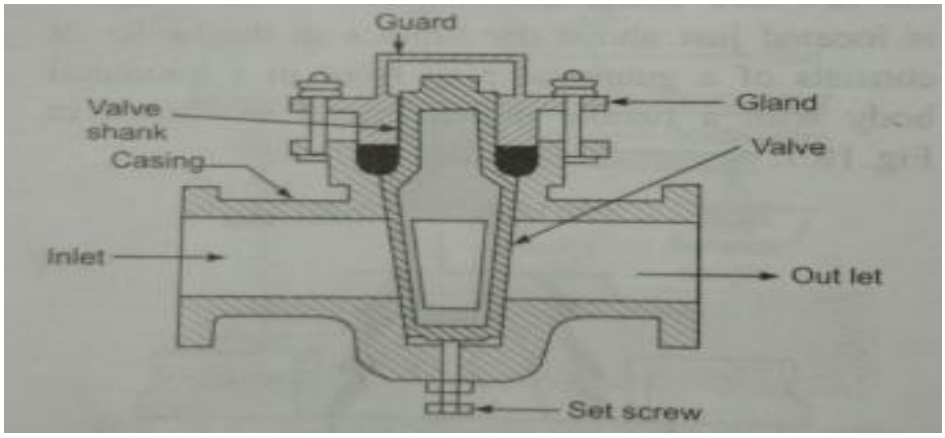

Fig. 09: Blow-off cock

FEED CHECK VALVE

The feed check valve is fitted to the boiler, slightly below the working level in the boiler. It is used to supply high pressure feed water to the boiler. It also prevents the returning of feed water from the boiler if the feed pump fails to work. A feed check valve consists of two valves feed valve and check valve as shown in figure. In normal working pressure, the feed water pressure is more the boiler pressure, thus the check valve remains open. But in case of its failure, the boiler pressure become more than the feed water, the valve rests on its seat and closes the water passage and prevents its reverse flow.

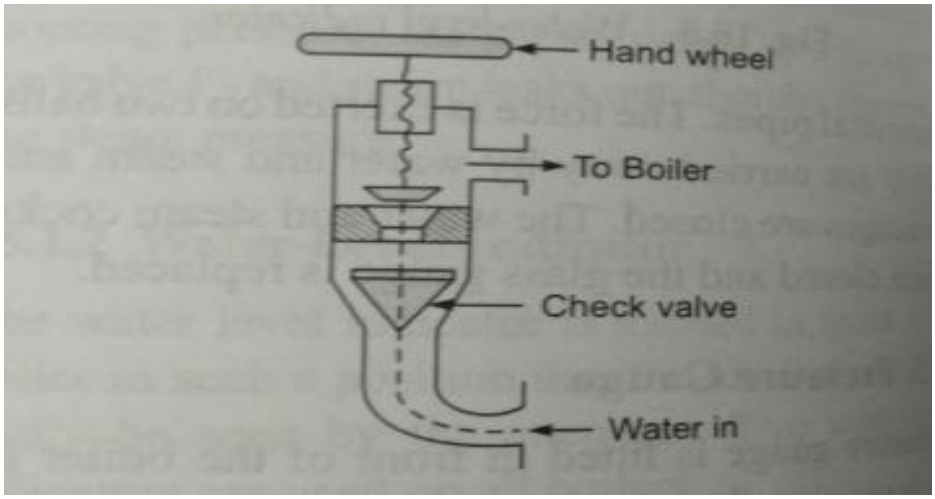

Fig.10: Feed check valve

STEAM STOP VALVE

The steam stop valve is located on the highest part of the steam space. It regulates the steam supply for use. The steam stop valve can be operated manually or automatically. It is hand operated.

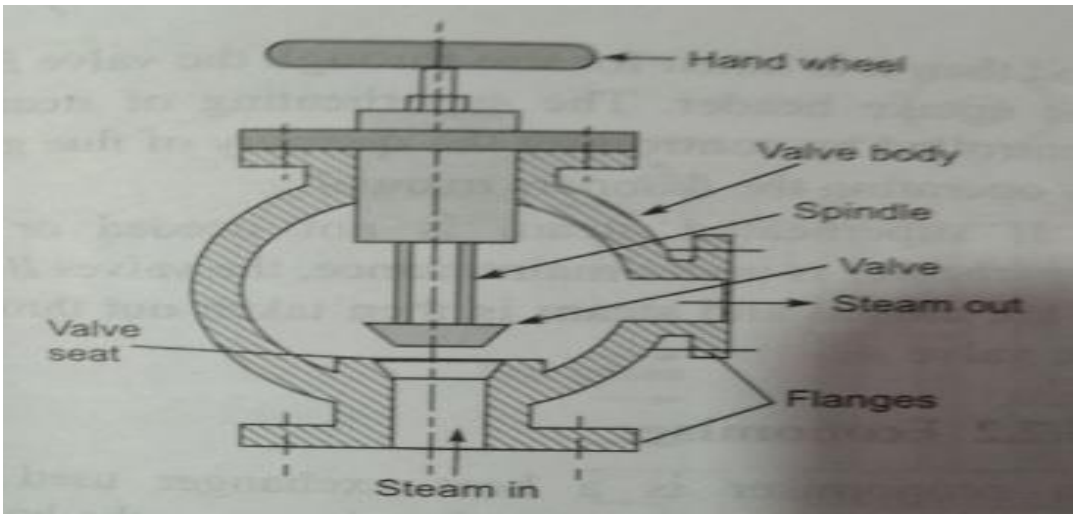

Fig.11: Steam stop valve

MAN HOLE AND MUD HOLE

The man hole is provided on the boiler shell at a convenient position so that a person can enter through it, inside the boiler for cleaning and inspection purposes.

The mud hole is placed at the bottom of the boiler to collect mud discharge through the blow off cock. Therefore, it is connected with blow off cock.

Sr. No.	Mounting	Function	Location
1	Safety Valve		
2	Steam Stop Valve		
3	Feed Check Valve		
4	Blow Off Valve		
5	Water Level Indicator		
6	Fusible Plug		
7	Pressure Gauge		