Lecture #2
PIC 18 Microcontrollers Architecture

Dr. Hassanein Shaban Ahmed

PIC 18 Microcontrollers Architecture

1
- What is a Microcontroller

2
- Types Of Microcontrollers
- PIC Microcontrollers

3
- Features and Internal Structure PIC 18 Microcontrollers

What is a Microcontroller?

- A **microcontroller** (sometimes abbreviated **µC, uC** or **MCU**) is a small computer on a single **integrated circuit** containing a **processor core, memory,** and programmable **input/output** peripherals.
- It can only perform simple/specific tasks.
- A microcontroller is often described as a '**computer-on-a-chip**'.

Microcontrollers

- Microcontrollers are purchased 'blank' and then programmed with a specific control program.
- Once programmed the microcontroller is build into a product to make the product more intelligent and easier to use.
- A designer will use a Microcontroller to:
  - Gather input from various sensors
  - Process this input into a set of actions
  - Use the output mechanisms on the microcontroller to do something useful.

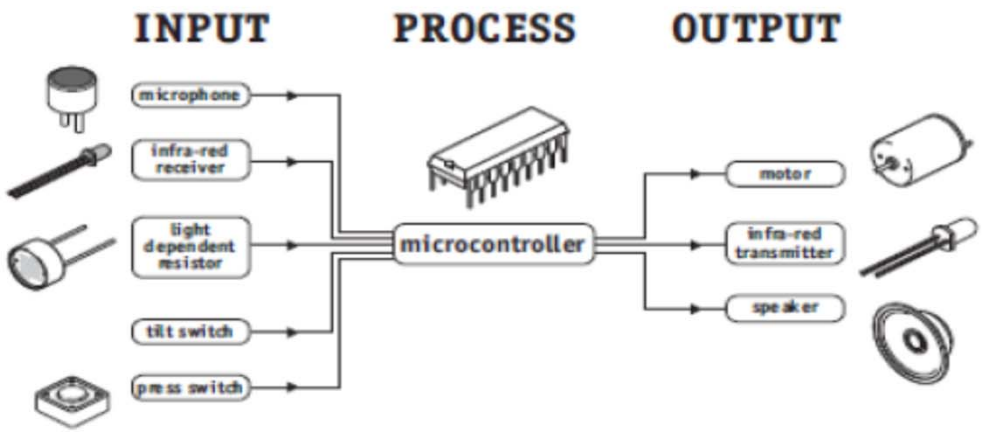

Microcontrollers

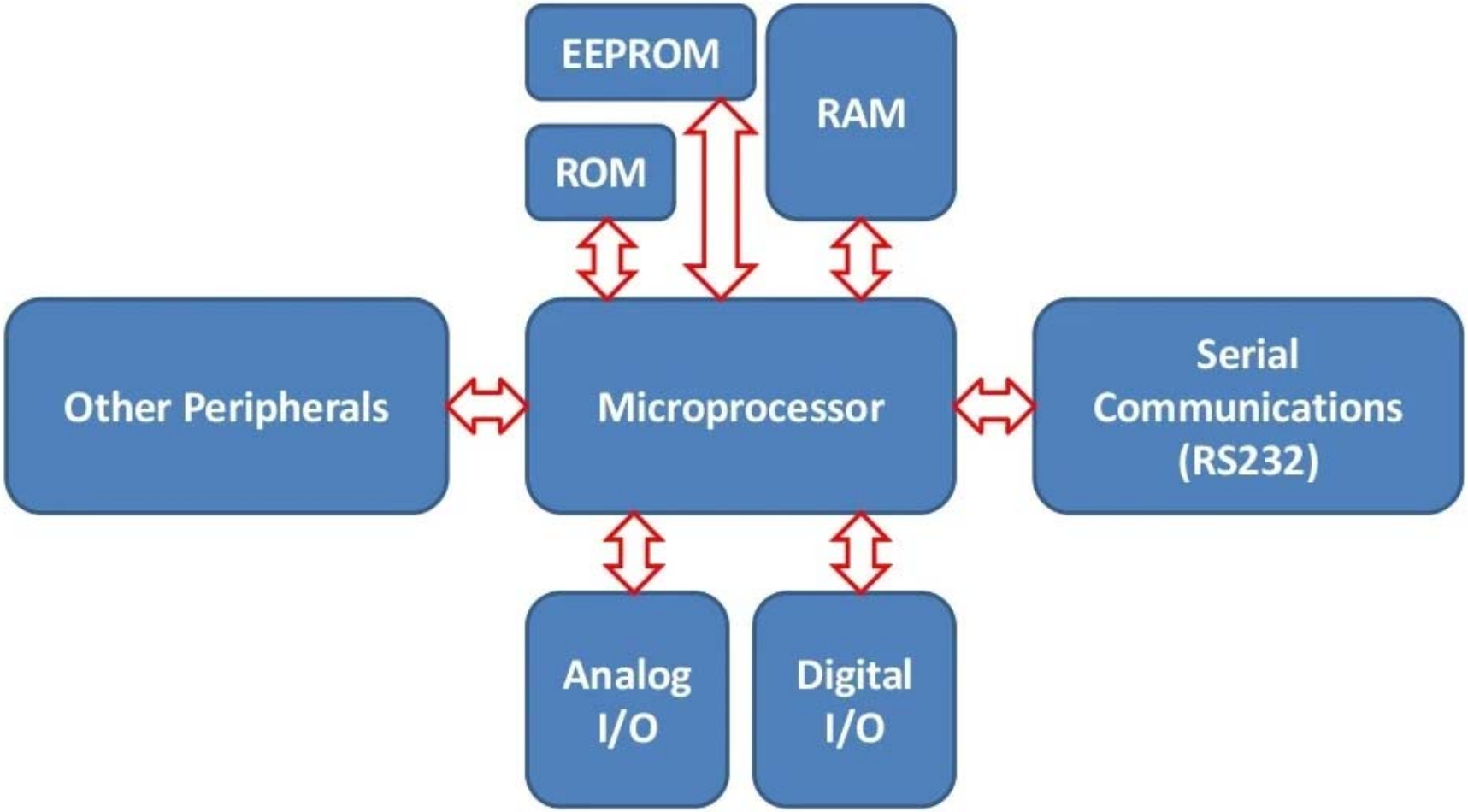

Types Of Microcontroller

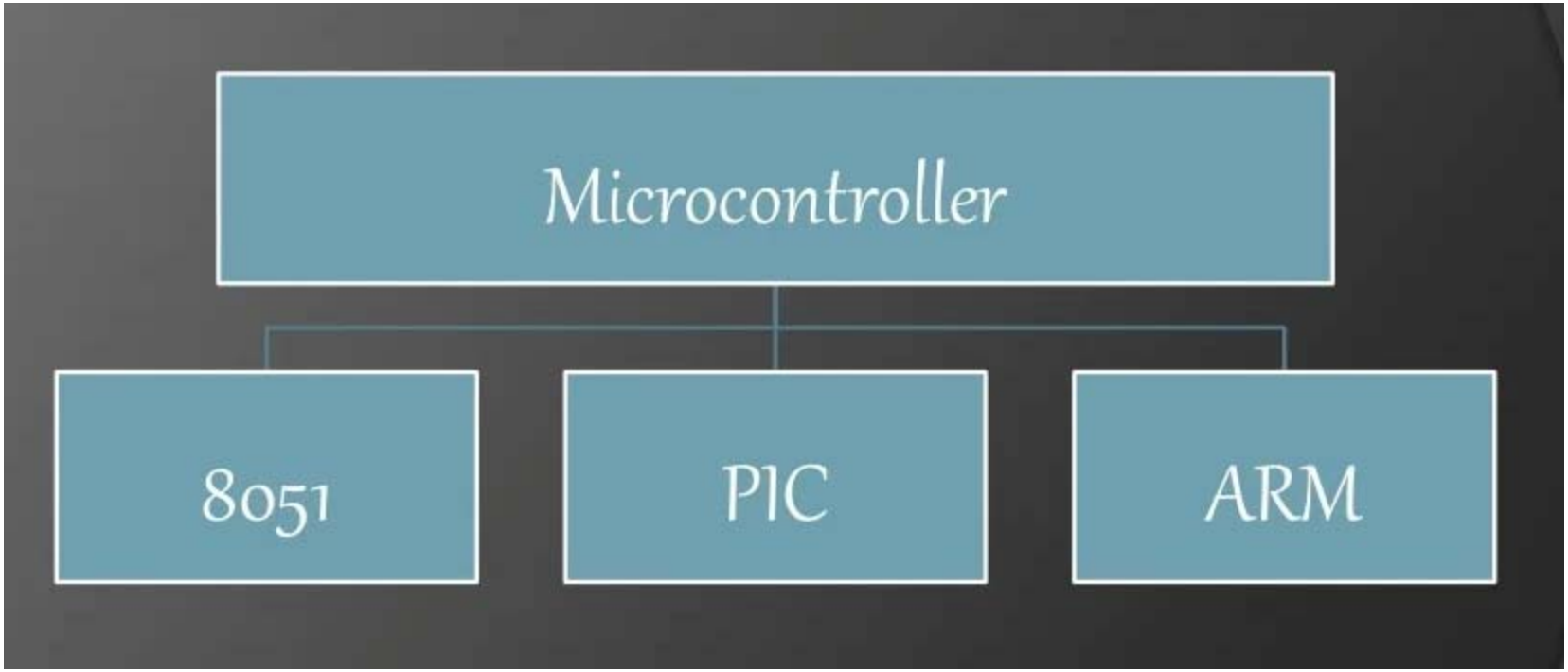

Types Of Microcontroller

- **Parallax Propeller**
- **Freescale 68HC11** (8-bit)
- **Intel 8051**
- **Silicon Laboratories** Pipelined 8051 Microcontrollers
- **ARM** processors (from many vendors) using **ARM7** or Cortex-M3 cores are generally microcontrollers
- **STMicroelectronics STM8** (8-bit), **ST10** (16-bit) and **STM32** (32-bit)
- **Atmel AVR** (8-bit), **AVR32** (32-bit), and **AT91SAM** (32-bit)
- **Freescale ColdFire** (32-bit) and **S08** (8-bit)
- **Hitachi H8, Hitachi SuperH** (32-bit)
- **Hyperstone** E1/E2 (32-bit, First full integration of RISC and DSP on one processor core [1996])
- **Infineon Microcontroller**: 8, 16, 32 Bit microcontrollers for automotive and industrial applications.

Types Of Microcontroller

- **MIPS** (32-bit PIC32)
- **NEC V850** (32-bit)
- **Microchip PIC** **(8-bit PIC16, PIC18, 16-bit dsPIC33/PIC24)**
- **PowerPC** ISE
- **PSoC** (Programmable System-on-Chip)
- **Rabbit 2000** (8-bit)
- **Texas Instruments Microcontroller MSP 430** (16-bit), C2000 (32-bit), and Stellaris (32-bit)
- **Toshiba TLCS-870** (8-bit/16-bit)
- **Zilog eZ8** (16-bit), **eZ80** (8-bit)
- etc

PIC MICROCONTROLLERS

- Peripheral Interface Controller (PIC) was originally designed by General Instruments
- In the late 1970s, GI introduced PIC® 1650 and 1655 – RISC with 30 instructions.
- PIC was sold to Microchip
- Features: low-cost, self-contained, 8-bit, Harvard structure, pipelined, RISC, single accumulator, with fixed reset and interrupt vectors.

PIC Microcontrollers Product Family

- 8-bit microcontrollers
  - PIC10
  - PIC12
  - PIC14
  - PIC16
  - PIC17
  - PIC18
- 16-bit microcontrollers
  - PIC24F
  - PIC24H
- 32-bit microcontrollers
  - PIC32
- 16-bit digital signal controllers
  - dsPIC30
  - dsPIC33F

PIC Microcontrollers Product Family

- The **F** in a name generally indicates the PICmicro uses flash memory and can be erased electronically.
- The **C** generally means it can only be erased by exposing the die to ultraviolet light (which is only possible if a windowed package style is used). An exception to this rule is the PIC16C84 which uses EEPROM and is therefore electrically erasable.

Table 1.3 Some PIC16CXXX and PIC16FXXX family members

Microcontroller	Program memory	Data RAM	Max speed (MHz)	I/O ports	A/D converter
PIC17C42	2048 × 16	232	33	33	–
16C554	512 × 14	80	20	13	–
16C64	2048 × 14	128	20	33	–
16C71	1024 × 14	68	20	13	4
16F877	8192 × 14	368	20	33	8
16F84	1024 × 14	68	10	13	–

Features PIC18F45K22 Microcontroller

TABLE 1: PIC18(L)F2X/4XK22 FAMILY TYPES

Device	Program Memory		Data Memory		I/O(1)	10-bit A/D Channels(2)	CCP	ECCP (Full-Bridge)	ECCP (Half-Bridge)	MSSP		EUSART	Comparator	CTMU	BOR/LVD	SR Latch	8-bit Timer	16-bit Timer
	Flash (Bytes)	# Single-Word Instructions	SRAM (Bytes)	EEPROM (Bytes)						SPI	I^2C							
PIC18(L)F23K22	8K	4096	512	256	25	19	2	1	2	2	2	2	2	Y	Y	Y	3	4
PIC18(L)F24K22	16K	8192	768	256	25	19	2	1	2	2	2	2	2	Y	Y	Y	3	4
PIC18(L)F25K22	32K	16384	1536	256	25	19	2	1	2	2	2	2	2	Y	Y	Y	3	4
PIC18(L)F26K22	64k	32768	3896	1024	25	19	2	1	2	2	2	2	2	Y	Y	Y	3	4
PIC18(L)F43K22	8K	4096	512	256	36	30	2	2	1	2	2	2	2	Y	Y	Y	3	4
PIC18(L)F44K22	16K	8192	768	256	36	30	2	2	1	2	2	2	2	Y	Y	Y	3	4
PIC18(L)F45K22	32K	16384	1536	256	36	30	2	2	1	2	2	2	2	Y	Y	Y	3	4
PIC18(L)F46K22	64k	32768	3896	1024	36	30	2	2	1	2	2	2	2	Y	Y	Y	3	4

Note 1: One pin is input only.

2: Channel count includes internal FVR and DAC channels.

Features PIC18F45K22 Microcontroller

Items	Key Features	PIC18F45K22
Frequency	MAX Operating Frequency	20MHz
Program Memory	Flash (Bytes)	32K
	# Single-Word Instructions	16384
Data Memory	SRAM (Bytes) Data Memory (bytes)	1536
	EEPROM Data Memory (bytes)	256
I/O Ports		36
16-bit Timers		4
8-bit Timers		3
CCP (Capture/Compare/PWM)		2
ECCP (Full-Bridge) (Capture/Compare/PWM)		2
ECCP (Half-Bridge) (Capture/Compare/PWM)		1
Serial Communications		MSSP, USART
Parallel Communications		PSP
10-bit Analog-to-Digital Module		30 Channels
Instruction Set		75 Instructions
Pins (DIP)		40 Pins

Architecture of PIC Microcontroller

The PIC microcontroller architecture comprises of CPU, I/O ports, memory organization, A/D converter, timers/counters, interrupts, serial communication, oscillator and CCP module which are discussed in detailed below.

Architecture of PIC Microcontroller

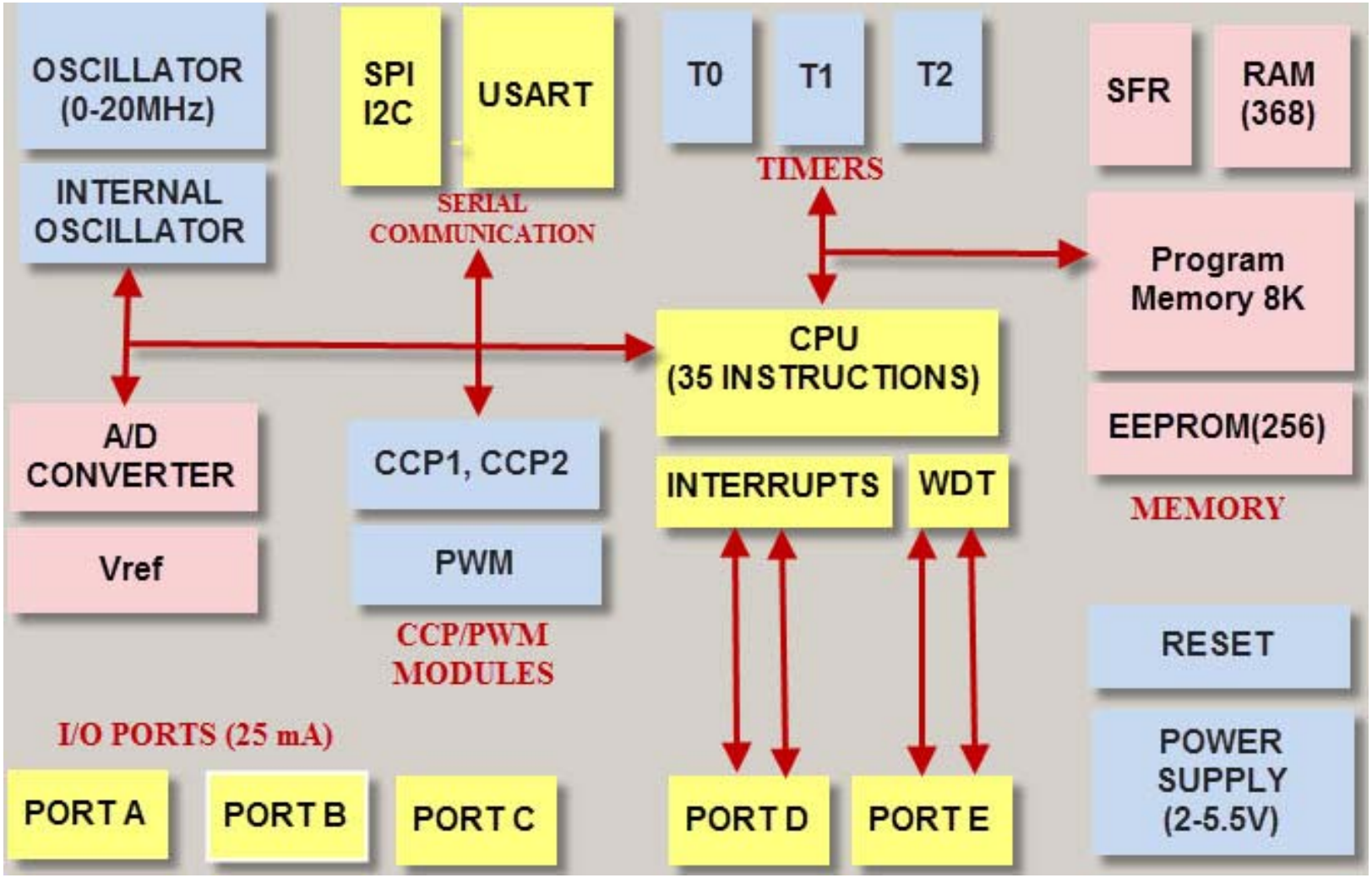

PIC18F45K22 Microcontrollers Pinout

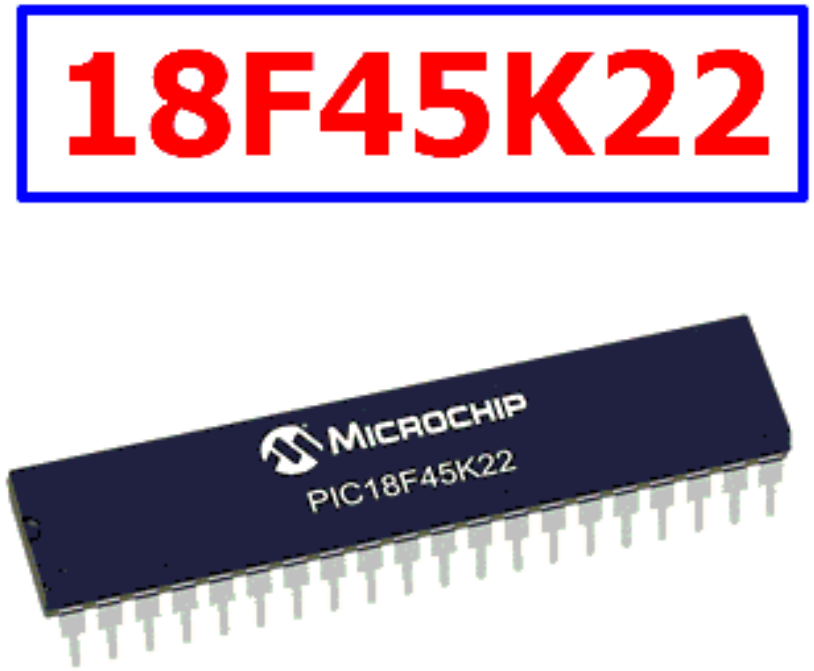

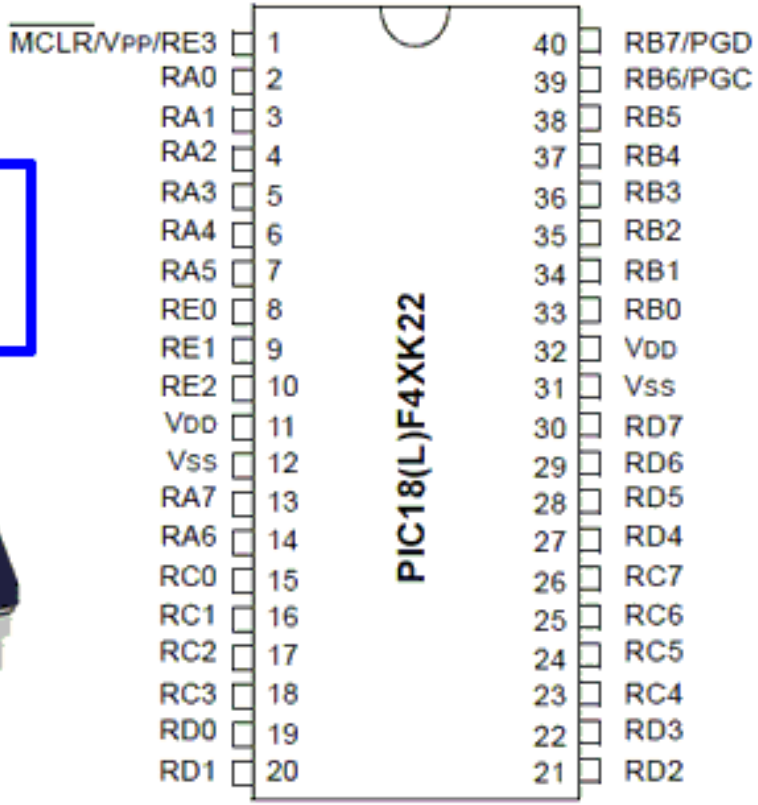

PIC18F45K22 Microcontrollers Architecture Block Diagram

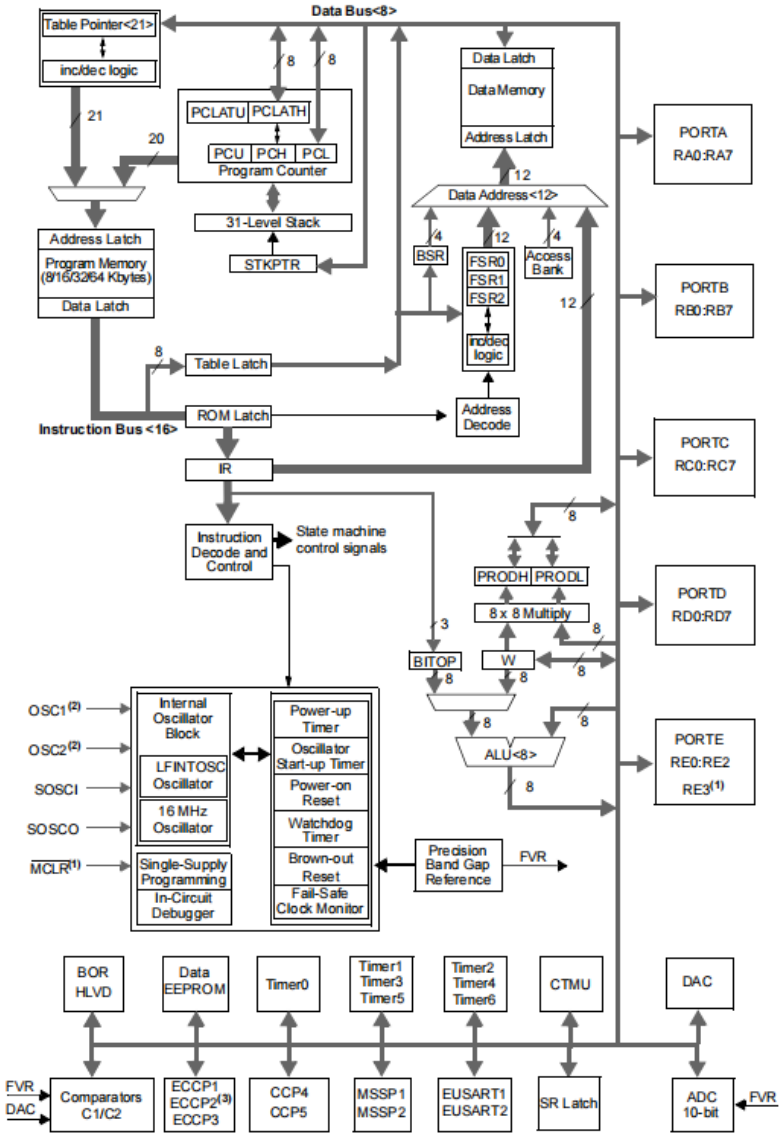

PIC18F45K22 Microcontroller PIN Summery

TABLE 3: PIC18(L)F4XK22 PIN SUMMARY

40-PDIP	40-UQFN	44-TQFP	44-QFN	I/O	Analog	Comparator	CTMU	SR Latch	Reference	(E)CCP	EUSART	MSSP	Timers	Interrupts	Pull-up	Basic
2	17	19	19	RA0	AN0	C12IN0-										
3	18	20	20	RA1	AN1	C12IN1-										
4	19	21	21	RA2	AN2	C2IN+			VREF- DACOUT							
5	20	22	22	RA3	AN3	C1IN+			VREF+							
6	21	23	23	RA4		C1OUT		SRQ					T0CKI			
7	22	24	24	RA5	AN4	C2OUT		SRNQ	HLVDIN			$\overline{SS}$1				
14	29	31	33	RA6												OSC2 CLKO
13	28	30	32	RA7												OSC1 CLKI
33	8	8	9	RB0	AN12			SRI		FLT0				INT0	Y	
34	9	9	10	RB1	AN10	C12IN3-								INT1	Y	
35	10	10	11	RB2	AN8		CTED1							INT2	Y	
36	11	11	12	RB3	AN9	C12IN2-	CTED2			CCP2 P2A(1)					Y	
37	12	14	14	RB4	AN11								T5G	IOC	Y	
38	13	15	15	RB5	AN13					CCP3 P3A(3)			T1G T3CKI(2)	IOC	Y	
39	14	16	16	RB6										IOC	Y	PGC
40	15	17	17	RB7										IOC	Y	PGD

PIC18F45K22 Microcontroller PIN Summery

TABLE 3: PIC18(L)F4XK22 PIN SUMMARY

40-PDIP	40-UQFN	44-TQFP	44-QFN	I/O	Analog	Comparator	CTMU	SR Latch	Reference	(E)CCP	EUSART	MSSP	Timers	Interrupts	Pull-up	Basic
15	30	32	34	RC0						P2B(4)			SOSCO T1CKI T3CKI(2) T3G			
16	31	35	35	RC1						CCP2(1) P2A			SOSCI			
17	32	36	36	RC2	AN14		CTPLS			CCP1 P1A			T5CKI			
18	33	37	37	RC3	AN15							SCK1 SCL1				
23	38	42	42	RC4	AN16							SDI1 SDA1				
24	39	43	43	RC5	AN17							SDO1				
25	40	44	44	RC6	AN18						TX1 CK1					
26	1	1	1	RC7	AN19						RX1 DT1					
19	34	38	38	RD0	AN20							SCK2 SCL2				
20	35	39	39	RD1	AN21					CCP4		SDI2 SDA2				
21	36	40	40	RD2	AN22					P2B(4)						
22	37	41	41	RD3	AN23					P2C		$\overline{SS}$2				
27	2	2	2	RD4	AN24					P2D		SD02				
28	3	3	3	RD5	AN25					P1B						
29	4	4	4	RD6	AN26					P1C	TX2 CK2					
30	5	5	5	RD7	AN27					P1D	RX2 DT2					
8	23	25	25	RE0	AN5					CCP3 P3A(3)						

PIC18F45K22 DEVICE FEATURES

TABLE 1-1: DEVICE FEATURES

Features	PIC18F23K22 PIC18LF23K22	PIC18F24K22 PIC18LF24K22	PIC18F25K22 PIC18(L)F25K22	PIC18F26K22 PIC18LF26K22	PIC18F43K22 PIC18LF43K22	PIC18F44K22 PIC18LF44K22	PIC18F45K22 PIC18LF45K22	PIC18F46K22 PIC18LF46K22
Program Memory (Bytes)	8192	16384	32768	65536	8192	16384	32768	65536
Program Memory (Instructions)	4096	8192	16384	32768	4096	8192	16384	32768
Data Memory (Bytes)	512	768	1536	3896	512	768	1536	3896
Data EEPROM Memory (Bytes)	256	256	256	1024	256	256	256	1024
I/O Ports	A, B, C, E(1)	A, B, C, E(1)	A, B, C, E(1)	A, B, C, E(1)	A, B, C, D, E	A, B, C, D, E	A, B, C, D, E	A, B, C, D, E
Capture/Compare/PWM Modules (CCP)	2	2	2	2	2	2	2	2
Enhanced CCP Modules (ECCP) - Half Bridge	2	2	2	2	1	1	1	1
Enhanced CCP Modules (ECCP) - Full Bridge	1	1	1	1	2	2	2	2
10-bit Analog-to-Digital Module (ADC)	2 internal 17 input	2 internal 17 input	2 internal 17 input	2 internal 17 input	2 internal 28 input	2 internal 28 input	2 internal 28 input	2 internal 28 input
Packages	28-pin PDIP 28-pin SOIC 28-pin SSOP 28-pin QFN 28-pin UQFN	28-pin PDIP 28-pin SOIC 28-pin SSOP 28-pin QFN 28-pin UQFN	28-pin PDIP 28-pin SOIC 28-pin SSOP 28-pin QFN	28-pin PDIP 28-pin SOIC 28-pin SSOP 28-pin QFN	40-pin PDIP 40-pin UQFN 44-pin QFN 44-pin TQFP	40-pin PDIP 40-pin UQFN 44-pin QFN 44-pin TQFP	40-pin PDIP 40-pin UQFN 44-pin QFN 44-pin TQFP	40-pin PDIP 40-pin UQFN 44-pin QFN 44-pin TQFP
Interrupt Sources	33							
Timers (16-bit)	4							
Serial Communications	2 MSSP, 2 EUSART							
SR Latch	Yes							
Charge Time Measurement Unit Module (CTMU)	Yes							
Programmable High/Low-Voltage Detect (HLVD)	Yes							
Programmable Brown-out Reset (BOR)	Yes							
Resets (and Delays)	POR, BOR, RESET Instruction, Stack Overflow, Stack Underflow (PWRT, OST), MCLR, WDT							
Instruction Set	75 Instructions; 83 with Extended Instruction Set enabled							
Operating Frequency	DC - 64 MHz							

PIC18(L)F2X/4XK22 Pinout I/O Descriptions

TABLE 1-3: PIC18(L)F4XK22 PINOUT I/O DESCRIPTIONS

Pin Number				Pin Name	Pin Type	Buffer Type	Description
PDIP	TQFP	QFN	UQFN				
2	19	19	17	RA0/C12IN0-/AN0			
				RA0	I/O	TTL	Digital I/O.
				C12IN0-	I	Analog	Comparators C1 and C2 inverting input.
				AN0	I	Analog	Analog input 0.
3	20	20	18	RA1/C12IN1-/AN1			
				RA1	I/O	TTL	Digital I/O.
				C12IN1-	I	Analog	Comparators C1 and C2 inverting input.
				AN1	I	Analog	Analog input 1.
4	21	21	19	RA2/C2IN+/AN2/DACOUT/VREF-			
				RA2	I/O	TTL	Digital I/O.
				C2IN+	I	Analog	Comparator C2 noninverting input.
				AN2	I	Analog	Analog input 2.
				DACOUT	O	Analog	DAC Reference output.
				VREF-	I	Analog	A/D reference voltage (low) input.
5	22	22	20	RA3/C1IN+/AN3/VREF+			
				RA3	I/O	TTL	Digital I/O.
				C1IN+	I	Analog	Comparator C1 noninverting input.
				AN3	I	Analog	Analog input 3.
				VREF+	I	Analog	A/D reference voltage (high) input.
6	23	23	21	RA4/C1OUT/SRQ/T0CKI			
				RA4	I/O	ST	Digital I/O.
				C1OUT	O	CMOS	Comparator C1 output.
				SRQ	O	TTL	SR latch Q output.
				T0CKI	I	ST	Timer0 external clock input.

PIC18(L)F2X/4XK22 Pinout I/O Descriptions

TABLE 1-3: PIC18(L)F4XK22 PINOUT I/O DESCRIPTIONS (CONTINUED)

Pin Number				Pin Name	Pin Type	Buffer Type	Description
PDIP	TQFP	QFN	UQFN				
7	24	24	22	RA5/C2OUT/SRNQ/$\overline{SS1}$/HLVDIN/AN4			
				RA5	I/O	TTL	Digital I/O.
				C2OUT	O	CMOS	Comparator C2 output.
				SRNQ	O	TTL	SR latch $\overline{Q}$ output.
				$\overline{SS1}$	I	TTL	SPI client select input (MSSP1).
				HLVDIN	I	Analog	High/Low-Voltage Detect input.
				AN4	I	Analog	Analog input 4.
14	31	33	29	RA6/CLKO/OSC2			
				RA6	I/O	TTL	Digital I/O.
				CLKO	O	—	In RC mode, OSC2 pin outputs CLKOUT which has 1/4 the frequency of OSC1 and denotes the instruction cycle rate.
				OSC2	O	—	Oscillator crystal output. Connects to crystal or resonator in Crystal Oscillator mode.
13	30	32	28	RA7/CLKI/OSC1			
				RA7	I/O	TTL	Digital I/O.
				CLKI	I	CMOS	External clock source input. Always associated with pin function OSC1.
				OSC1	I	ST	Oscillator crystal input or external clock source input ST buffer when configured in RC mode; CMOS otherwise.

PIC18(L)F2X/4XK22 Pinout I/O Descriptions

Pin Number				Pin Name	Pin Type	Buffer Type	Description
PDIP	TQFP	QFN	UQFN				
33	8	9	8	RB0/INT0/FLT0/SRI/AN12			
				RB0	I/O	TTL	Digital I/O.
				INT0	I	ST	External interrupt 0.
				FLT0	I	ST	PWM Fault input for ECCP Auto-Shutdown.
				SRI	I	ST	SR latch input.
				AN12	I	Analog	Analog input 12.
34	9	10	9	RB1/INT1/C12IN3-/AN10			
				RB1	I/O	TTL	Digital I/O.
				INT1	I	ST	External interrupt 1.
				C12IN3-	I	Analog	Comparators C1 and C2 inverting input.
				AN10	I	Analog	Analog input 10.
35	10	11	10	RB2/INT2/CTED1/AN8			
				RB2	I/O	TTL	Digital I/O.
				INT2	I	ST	External interrupt 2.
				CTED1	I	ST	CTMU Edge 1 input.
				AN8	I	Analog	Analog input 8.
36	11	12	11	RB3/CTED2/P2A/CCP2/C12IN2-/AN9			
				RB3	I/O	TTL	Digital I/O.
				CTED2	I	ST	CTMU Edge 2 input.
				P2A(2)	O	CMOS	Enhanced CCP2 PWM output.
				CCP2(2)	I/O	ST	Capture 2 input/Compare 2 output/PWM 2 output.
				C12IN2-	I	Analog	Comparators C1 and C2 inverting input.
				AN9	I	Analog	Analog input 9.

PIC18(L)F2X/4XK22 Pinout I/O Descriptions

TABLE 1-3: PIC18(L)F4XK22 PINOUT I/O DESCRIPTIONS (CONTINUED)

Pin Number				Pin Name	Pin Type	Buffer Type	Description
PDIP	TQFP	QFN	UQFN				
37	14	14	12	RB4/IOC0/T5G/AN11			
				RB4	I/O	TTL	Digital I/O.
				IOC0	I	TTL	Interrupt-on-change pin.
				T5G	I	ST	Timer5 external clock gate input.
				AN11	I	Analog	Analog input 11.
38	15	15	13	RB5/IOC1/P3A/CCP3/T3CKI/T1G/AN13			
				RB5	I/O	TTL	Digital I/O.
				IOC1	I	TTL	Interrupt-on-change pin.
				P3A(1)	O	CMOS	Enhanced CCP3 PWM output.
				CCP3(1)	I/O	ST	Capture 3 input/Compare 3 output/PWM 3 output.
				T3CKI(2)	I	ST	Timer3 clock input.
				T1G	I	ST	Timer1 external clock gate input.
				AN13	I	Analog	Analog input 13.
39	16	16	14	RB6/IOC2/PGC			
				RB6	I/O	TTL	Digital I/O.
				IOC2	I	TTL	Interrupt-on-change pin.
				PGC	I/O	ST	In-Circuit Debugger and ICSP™ programming clock pin.

PIC18(L)F2X/4XK22 Pinout I/O Descriptions

TABLE 1-3: PIC18(L)F4XK22 PINOUT I/O DESCRIPTIONS (CONTINUED)

Pin Number				Pin Name	Pin Type	Buffer Type	Description
PDIP	TQFP	QFN	UQFN				
40	17	17	15	RB7/IOC3/PGD			
				RB7	I/O	TTL	Digital I/O.
				IOC3	I	TTL	Interrupt-on-change pin.
				PGD	I/O	ST	In-Circuit Debugger and ICSP™ programming data pin.
15	32	34	30	RC0/P2B/T3CKI/T3G/T1CKI/SOSCO			
				RC0	I/O	ST	Digital I/O.
				P2B(2)	O	CMOS	Enhanced CCP1 PWM output.
				T3CKI(1)	I	ST	Timer3 clock input.
				T3G	I	ST	Timer3 external clock gate input.
				T1CKI	I	ST	Timer1 clock input.
				SOSCO	O	—	Secondary oscillator output.
16	35	35	31	RC1/P2A/CCP2/SOSCI			
				RC1	I/O	ST	Digital I/O.
				P2A(1)	O	CMOS	Enhanced CCP2 PWM output.
				CCP2(1)	I/O	ST	Capture 2 input/Compare 2 output/PWM 2 output.
				SOSCI	I	Analog	Secondary oscillator input.
17	36	36	32	RC2/CTPLS/P1A/CCP1/T5CKI/AN14			
				RC2	I/O	ST	Digital I/O.
				CTPLS	O	—	CTMU pulse generator output.
				P1A	O	CMOS	Enhanced CCP1 PWM output.
				CCP1	I/O	ST	Capture 1 input/Compare 1 output/PWM 1 output.
				T5CKI	I	ST	Timer5 clock input.
				AN14	I	Analog	Analog input 14.

PIC18(L)F2X/4XK22 Pinout I/O Descriptions

TABLE 1-3: PIC18(L)F4XK22 PINOUT I/O DESCRIPTIONS (CONTINUED)

Pin Number				Pin Name	Pin Type	Buffer Type	Description
PDIP	TQFP	QFN	UQFN				
18	37	37	33	RC3/SCK1/SCL1/AN15			
				RC3	I/O	ST	Digital I/O.
				SCK1	I/O	ST	Synchronous serial clock input/output for SPI mode (MSSP).
				SCL1	I/O	ST	Synchronous serial clock input/output for I^2C mode (MSSP).
				AN15	I	Analog	Analog input 15.
23	42	42	38	RC4/SDI1/SDA1/AN16			
				RC4	I/O	ST	Digital I/O.
				SDI1	I	ST	SPI data in (MSSP).
				SDA1	I/O	ST	I^2C data I/O (MSSP).
				AN16	I	Analog	Analog input 16.
24	43	43	39	RC5/SDO1/AN17			
				RC5	I/O	ST	Digital I/O.
				SDO1	O	—	SPI data out (MSSP).
				AN17	I	Analog	Analog input 17.
25	44	44	40	RC6/TX1/CK1/AN18			
				RC6	I/O	ST	Digital I/O.
				TX1	O	—	EUSART asynchronous transmit.
				CK1	I/O	ST	EUSART synchronous clock (see related RXx/DTx).
				AN18	I	Analog	Analog input 18.

PIC18(L)F2X/4XK22 Pinout I/O Descriptions

TABLE 1-3: PIC18(L)F4XK22 PINOUT I/O DESCRIPTIONS (CONTINUED)

Pin Number				Pin Name	Pin Type	Buffer Type	Description
PDIP	TQFP	QFN	UQFN				
26	1	1	1	RC7/RX1/DT1/AN19			
				RC7	I/O	ST	Digital I/O.
				RX1	I	ST	EUSART asynchronous receive.
				DT1	I/O	ST	EUSART synchronous data (see related TXx/CKx).
				AN19	I	Analog	Analog input 19.
19	38	38	34	RD0/SCK2/SCL2/AN20			
				RD0	I/O	ST	Digital I/O.
				SCK2	I/O	ST	Synchronous serial clock input/output for SPI mode (MSSP).
				SCL2	I/O	ST	Synchronous serial clock input/output for I^2C mode (MSSP).
				AN20	I	Analog	Analog input 20.
20	39	39	35	RD1/CCP4/SDI2/SDA2/AN21			
				RD1	I/O	ST	Digital I/O.
				CCP4	I/O	ST	Capture 4 input/Compare 4 output/PWM 4 output.
				SDI2	I	ST	SPI data in (MSSP).
				SDA2	I/O	ST	I^2C data I/O (MSSP).
				AN21	I	Analog	Analog input 21.

PIC18(L)F2X/4XK22 Pinout I/O Descriptions

TABLE 1-3: PIC18(L)F4XK22 PINOUT I/O DESCRIPTIONS (CONTINUED)

Pin Number				Pin Name	Pin Type	Buffer Type	Description
PDIP	TQFP	QFN	UQFN				
21	40	40	36	RD2/P2B/AN22			
				RD2	I/O	ST	Digital I/O
				P2B(1)	O	CMOS	Enhanced CCP2 PWM output.
				AN22	I	Analog	Analog input 22.
22	41	41	37	RD3/P2C/$\overline{SS2}$/AN23			
				RD3	I/O	ST	Digital I/O.
				P2C	O	CMOS	Enhanced CCP2 PWM output.
				$\overline{SS2}$	I	TTL	SPI client select input (MSSP).
				AN23	I	Analog	Analog input 23.
27	2	2	2	RD4/P2D/SDO2/AN24			
				RD4	I/O	ST	Digital I/O.
				P2D	O	CMOS	Enhanced CCP2 PWM output.
				SDO2	O	—	SPI data out (MSSP).
				AN24	I	Analog	Analog input 24.
28	3	3	3	RD5/P1B/AN25			
				RD5	I/O	ST	Digital I/O.
				P1B	O	CMOS	Enhanced CCP1 PWM output.
				AN25	I	Analog	Analog input 25.

PIC18(L)F2X/4XK22 Pinout I/O Descriptions

TABLE 1-3: PIC18(L)F4XK22 PINOUT I/O DESCRIPTIONS (CONTINUED)

Pin Number				Pin Name	Pin Type	Buffer Type	Description
PDIP	TQFP	QFN	UQFN				
29	4	4	4	RD6/P1C/TX2/CK2/AN26			
				RD6	I/O	ST	Digital I/O.
				P1C	O	CMOS	Enhanced CCP1 PWM output.
				TX2	O	—	EUSART asynchronous transmit.
				CK2	I/O	ST	EUSART synchronous clock (see related RXx/DTx).
				AN26	I	Analog	Analog input 26.
30	5	5	5	RD7/P1D/RX2/DT2/AN27			
				RD7	I/O	ST	Digital I/O.
				P1D	O	CMOS	Enhanced CCP1 PWM output.
				RX2	I	ST	EUSART asynchronous receive.
				DT2	I/O	ST	EUSART synchronous data (see related TXx/CKx).
				AN27	I	Analog	Analog input 27.
8	25	25	23	RE0/P3A/CCP3/AN5			
				RE0	I/O	ST	Digital I/O.
				P3A(2)	O	CMOS	Enhanced CCP3 PWM output.
				CCP3(2)	I/O	ST	Capture 3 input/Compare 3 output/PWM 3 output.
				AN5	I	Analog	Analog input 5.
9	26	26	24	RE1/P3B/AN6			
				RE1	I/O	ST	Digital I/O.
				P3B	O	CMOS	Enhanced CCP3 PWM output.
				AN6	I	Analog	Analog input 6.

PIC18(L)F2X/4XK22 Pinout I/O Descriptions

TABLE 1-3: PIC18(L)F4XK22 PINOUT I/O DESCRIPTIONS (CONTINUED)

Pin Number				Pin Name	Pin Type	Buffer Type	Description
PDIP	TQFP	QFN	UQFN				
10	27	27	25	RE2/CCP5/AN7			
				RE2	I/O	ST	Digital I/O.
				CCP5	I/O	ST	Capture 5 input/Compare 5 output/PWM 5 output
				AN7	I	Analog	Analog input 7.
1	18	18	16	RE3/VPP/$\overline{\text{MCLR}}$			
				RE3	I	ST	Digital input.
				VPP	P		Programming voltage input.
				$\overline{\text{MCLR}}$	I	ST	Active-low Master Clear (device Reset) input.
11,32	7, 28	7, 8, 28, 29	7, 26	VDD	P	—	Positive supply for logic and I/O pins.
12,31	6, 29	6,30, 31	6, 27	VSS	P	—	Ground reference for logic and I/O pins.
	12,13, 33,34	13		NC			

Memory of the PIC18F45K22 Microcontroller

- divided into 3 types of memories:

1. **Program Memory** – A memory that contains the program (which we had written), after we've burned it. As a reminder, Program Counter executes commands stored in the program memory, one after the other.
2. **Data Memory** – This is RAM memory type, which contains a special registers like **SFR** (Special Function Register) and **GPR** (General Purpose Register). The variables that we store in the Data Memory during the program are deleted after we turn off the micro. These two memories have separated data buses, which makes the access to each one of them very easy.
3. **Data EEPROM** **(Electrically Erasable Programmable Read-Only Memory)** – A memory that allows storing the variables as a result of burning the written program.

PIC18F45K22 Microcontroller Registers

- **Register**
  - A place inside the PIC that can be written to, read from, or both (8-bit numbers)

TABLE 9-4: SUMMARY OF REGISTERS ASSOCIATED WITH PORTB

Name	Bit 7	Bit 6	Bit 5	Bit 4	Bit 3	Bit 2	Bit 1	Bit 0	Value on POR, BOR	Value on All Other RESETS
PORTB	RB7	RB6	RB5	RB4	RB3	RB2	RB1	RB0	xxxx xxxx	uuuu uuuu
LATB	LATB Data Output Register								xxxx xxxx	uuuu uuuu
TRISB	PORTB Data Direction Register								1111 1111	1111 1111
INTCON	GIE/ GIEH	PEIE/ GIEL	TMR0IE	INT0IE	RBIE	TMR0IF	INT0IF	RBIF	0000 000x	0000 000u
INTCON2	RBPU	INTEDG0	INTEDG1	INTEDG2	—	TMR0IP	—	RBIP	1111 -1-1	1111 -1-1
INTCON3	INT2IP	INT1IP	—	INT2IE	INT1IE	—	INT2IF	INT1IF	11-0 0-00	11-0 0-00

Legend: x = unknown, u = unchanged. Shaded cells are not used by PORTB.

PIC18F45K22 Microcontroller Registers

Memory Map Registers

- In order to start programming and build automated system, there is no need to study all the registers of the memory map, but only a few most important ones:
  - **STATUS register** – changes/moves from/between the banks.
  - **PORT registers** – assigns logic values ("0"/"1") to the ports
  - **TRIS registers** – data direction register (input/output)

Memory of the PIC18F45K22 Microcontroller

STATUS Register

- Is an 8-bit register that stores the status of the processor.
- In most cases, this register is used to switch between the banks (Register Bank Select), but also has other capabilities.

STATUS REGISTER (ADDRESS 03h, 83h, 103h, 183h)

R/W-0	R/W-0	R/W-0	R-1	R-1	R/W-x	R/W-x	R/W-x
IRP	RP1	RP0	$\overline{TO}$	$\overline{PD}$	Z	DC	C
bit 7							bit 0

- **IRP - Register Bank Select bit.**
- **RP1:RP0: - Register Bank Select bits.**
- **TO: Time-out bit**
- **PD: Power-down bit**

  Used in conjunction with PIC's sleep mode
- **Z: Zero bit**
- **DC: Digit carry/borrow bit**
- **C: Carry/borrow bit**

PIC18F45K22 Microcontroller Peripheral Features

I/O Ports

PIC18F45K22 Has 5 I/O ports

1. **PORTA is an 8-bit wide, bidirectional port.**
2. **PORTB is an 8-bit wide, bidirectional port.**
3. **PORTC is an 8-bit wide, bidirectional port.**
4. **PORTD is an 8-bit wide, bidirectional port.**
5. **PORTE is an 4-bit wide, bidirectional port.**
   - In addition, they have the following alternate functions:

Port	Altenative uses of I/O pins	No.of I/O pins
Port A	A/D Converter inputs	6
Port B	External interrupt inputs	8
Port C	Serial port, Timer I/O	8
Port D	Parallel slave port	8
Port E	A/D Converter inputs	3
	Total I/O pins	33
	Total pins	40

PIC18F45K22 Microcontroller Peripheral Features

PIC Peripherals: Ports (Digital I/O)

- All PICs have digital I/O pins, called 'Ports
- Ports have 2 control registers
  - TRISx sets whether each pin is an input or output
  - PORTx sets their output bit levels
- Most pins have 25mA source/sink (directly drives LEDs)

- Each port has **2 control registers**:
  - **TRIS**x sets whether each pin is an input(1) or output(0)
  - **PORT**x sets their output bit levels or contain their input bit levels.
- Pin functionality "overloaded" with other features.
- Most pins have 25mA source/sink thus it can drive LEDs directly.

PIC18F45K22 Microcontroller Peripheral Features

TABLE 10-2: REGISTERS ASSOCIATED WITH PORTA

Name	Bit 7	Bit 6	Bit 5	Bit 4	Bit 3	Bit 2	Bit 1	Bit 0	Register on Page
ANSELA	—	—	ANSA5	—	ANSA3	ANSA2	ANSA1	ANSA0	149
CM1CON0	C1ON	C1OUT	C1OE	C1POL	C1SP	C1R	C1CH<1:0>		308
CM2CON0	C2ON	C2OUT	C2OE	C2POL	C2SP	C2R	C2CH<1:0>		308
LATA	LATA7	LATA6	LATA5	LATA4	LATA3	LATA2	LATA1	LATA0	152
VREFCON1	DACEN	DACLPS	DACOE	—	DACPSS<1:0>		—	DACNSS	335
VREFCON2	—	—	—	DACR<4:0>					336
HLVDCON	VDIRMAG	BGVST	IRVST	HLVDEN	HLVDL<3:0>				337
PORTA	RA7	RA6	RA5	RA4	RA3	RA2	RA1	RA0	148
SLRCON	—	—	—	SLRE	SLRD	SLRC	SLRB	SLRA	153
SRCON0	SRLEN	SRCLK<2:0>			SRQEN	SRNQEN	SRPS	SRPR	329
SSP1CON1	WCOL	SSPOV	SSPEN	CKP	SSPM<3:0>				253
T0CON	TMR0ON	T08BIT	T0CS	T0SE	PSA	T0PS<2:0>			154
TRISA	TRISA7	TRISA6	TRISA5	TRISA4	TRISA3	TRISA2	TRISA1	TRISA0	151

PIC18F45K22 Microcontroller Peripheral Features

REGISTER 10-3: ANSELA – PORTA ANALOG SELECT REGISTER

U-0	U-0	R/W-1	U-0	R/W-1	R/W-1	R/W-1	R/W-1
—	—	ANSA5	—	ANSA3	ANSA2	ANSA1	ANSA0
bit 7							bit 0

Legend:			
R = Readable bit	W = Writable bit	U = Unimplemented bit, read as '0'	
-n = Value at POR	'1' = Bit is set	'0' = Bit is cleared	x = Bit is unknown

bit 7-6 **Unimplemented:** Read as '0'

bit 5 **ANSA5:** RA5 Analog Select bit
1 = Digital input buffer disabled
0 = Digital input buffer enabled

bit 4 **Unimplemented:** Read as '0'

bit 3-0 **ANSA<3:0>:** RA<3:0> Analog Select bit
1 = Digital input buffer disabled
0 = Digital input buffer enabled

PIC18F45K22 Microcontroller Peripheral Features

FIGURE 10-1: GENERIC I/O PORT OPERATION

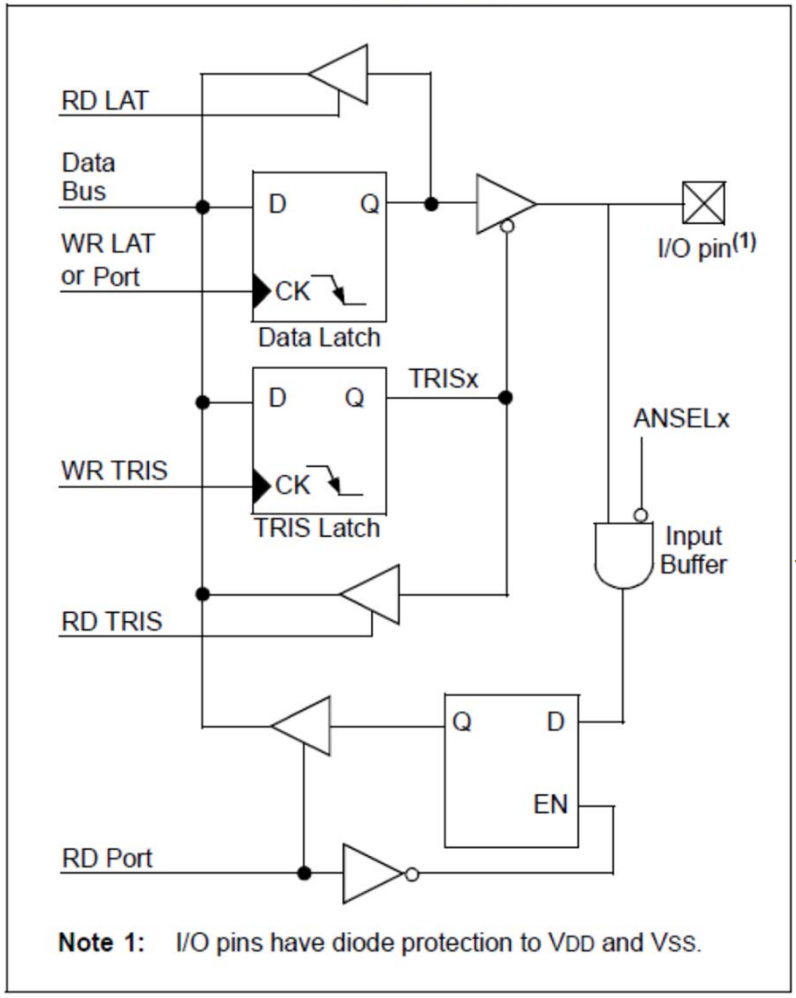

Note 1: I/O pins have diode protection to VDD and VSS.

Input Buffer

PIC18F45K22 Microcontroller Peripheral Features

10.9 Register Definitions – Port Control

REGISTER 10-1: PORTX(1): PORTx REGISTER

R/W-u/x	R/W-u/x	R/W-u/x	R/W-u/x	R/W-u/x	R/W-u/x	R/W-u/x	R/W-u/x
Rx7	Rx6	Rx5	Rx4	Rx3	Rx2	Rx1	Rx0
bit 7							bit 0

Legend:		
R = Readable bit	W = Writable bit	U = Unimplemented bit, read as '0'
'1' = Bit is set	'0' = Bit is cleared	x = Bit is unknown
-n/n = Value at POR and BOR/Value at all other Resets		

bit 7-0 **Rx<7:0>:** PORTx I/O bit values(2)

Note 1: Register Description for PORTA, PORTB, PORTC and PORTD.

2: Writes to PORTx are written to corresponding LATx register. Reads from PORTx register is return of I/O pin values.

PIC18F45K22 Microcontroller Peripheral Features

REGISTER 10-8: TRISx: PORTx TRI-STATE REGISTER(1)

R/W-1	R/W-1	R/W-1	R/W-1	R/W-1	R/W-1	R/W-1	R/W-1
TRISx7	TRISx6	TRISx5	TRISx4	TRISx3	TRISx2	TRISx1	TRISx0
bit 7							bit 0

Legend:			
R = Readable bit	W = Writable bit	U = Unimplemented bit, read as '0'	
-n = Value at POR	'1' = Bit is set	'0' = Bit is cleared	x = Bit is unknown

bit 7-0 **TRISx<7:0>:** PORTx Tri-State Control bit
1 = PORTx pin configured as an input (tri-stated)
0 = PORTx pin configured as an output

Note 1: Register description for TRISA, TRISB, TRISC and TRISD.

If TRISx Bits=0 Then PORTx pin configured as an Output

If TRISx Bits=1 Then PORTx pin configured as an Input

PIC18F45K22 Microcontroller Peripheral Features

REGISTER 10-10: LATx: PORTx OUTPUT LATCH REGISTER(1)

R/W-x/u	R/W-x/u	R/W-x/u	R/W-x/u	R/W-x/u	R/W-x/u	R/W-x/u	R/W-x/u
LATx7	LATx6	LATx5	LATx4	LATx3	LATx2	LATx1	LATx0
bit 7							bit 0

Legend:			
R = Readable bit	W = Writable bit	U = Unimplemented bit, read as '0'	
-n = Value at POR	'1' = Bit is set	'0' = Bit is cleared	x = Bit is unknown

bit 7-0 **LATx<7:0>:** PORTx Output Latch bit value(2)

Note 1: Register Description for LATA, LATB, LATC and LATD.

2: Writes to PORTx are written to corresponding LATx register. Reads from PORTx register is return of I/O pin values.

PIC18F45K22 Microcontroller Peripheral Features

The PIC18 A/D Converter

- The PIC18 has a 10-bit A/D converter.
- The number of analog inputs varies among difference PIC18 devices.
- The A/D converter has the following registers:

- A/D Result High Register (ADRESH)
- A/D Result Low Register (ADRESL)
- A/D Control Register 0 (ADCON0)
- A/D Control Register 1 (ADCON1)
- A/D Control Register 2 (ADCON2)

- The contents of these registers vary with the PIC18 members.
- Early PIC18 (PIC18FXX2) members have only ADCON0 and ADCON1 registers.

PIC18F45K22 Microcontroller Peripheral Features

Timer / counter Modules

1. **Timer0 module is a 8-bit or 16-bit timer/counter**
2. **Timer1/3/5 module is a 16-bit timer/counter**
3. **Timer2/4/6 module is a 8-bit timer/counter**