SERVICE MANUAL

Prophecy

SOLO SYNTHESIZER

Multi Oscillator Synthesis System

CONTENTS

1. SPECIFICATIONS 1
2. FULL VIEW 3
3. DISASSEMBLY 4
4. BLOCK DIAGRAM 10
5. CIRCUIT DIAGRAMS 11
6. P.C. BOARDS 20
7. TEST MODE 29
8. REFERENCE DATA 44
9. PARTS LIST 59

KORG

1. SPECIFICATIONS

TECHNICAL SPECIFICATIONS

1) SOUND GENERATION METHOD	:	MOSS (Multi Oscillator Synthesis System)
2) SOUND SOURCE	:	MONOPHONIC 2 OSCILLATORS (max.) + SUB OSCILLATOR + NOISE GENERATOR
3) KEYBOARD	:	37 NOTES WITH VELOCITY & AFTERTOUCH SENSITIVITY
4) CONTROLS	:	OUTPUT LEVEL P.E.PARAMETER KNOB×5 SPEED KNOB SW ×40 PITCH BEND WHEEL MODULATION WHEEL X-Y-Z CONTROLER (WHEEL & RIBON CONTROLER) POWER SW
5) EFFECTS	:	7 EFFECTS DISTORTION,WAH,P-EQ,CHORUS/FLANGER+DELAY or REVERB.
6) PRESERVE DATA	:	Accumulators maintain presets, patterns & global -parameters with battery backup
7) PRESETABLE PARAMETERS	:	644 PARAMETERS/1PROGRAM
8) PRESETS-USER	:	128 PROGRAMS
-FACTORY	:	128 PROGRAMS (can be user changed & recalled)
-CARD	:	64 PROGRAMS (optional)
9) ARPEGGIATOR SECTION		
PRESET PATTERNS-FACTORY	:	5 PATTERNS
-USER	:	5 PATTERNS
-CARD	:	10 PATTERNS (optional)
10) DEMO. SONG	:	16 SONGS
11) MEMORY CARD	:	"FUJITSU"CARD (SRAM card with battery backup) for optional program data & arpeggiator pattern memory
12) INPUT/OUTPUT JACK CONNECTIONS	:	OUTPUT (LEFT, RIGHT) (1/4" phone) ASSIGNABLE FOOT SW INPUT (1/4" phone) for optional parameter control by momentary SW ASSIGNABLE FOOT PEDAL INPUT (1/4" phone) for optional parameter control by variable resistor pedal EC5 IN (std. DIN conn.) MIDI (IN, OUT, THRU) (std. DIN conn.) ACV IN (std. IEC conn.) MEMORY CARD SOLT (custom) HEADPHONE OUTPUT (1/8" stereo mini phone)
13) DISPLAY	:	40×2 CHARACTER LCD WITH LED BACKLIGHT LED (RED)×30

ELECTRICAL SPECIFICATIONS

1) MAX. OUTPUT LEVEL	:	+8.8dBu
2) OUTPUT IMPEDANCES	:	1KΩ
3) HEADPHONE AMPLIFIER	:	100mW (max)/32Ω (stereo)
4) D/A RESOLUTION	:	20bit Linear
SAMPLERATE	:	48kHz
		with 128 times over sampling bit stream DAC
5) FREQUENCY RESPONCE	:	20Hz～20kHz (+/-1dB)
6) S/N RATIO	:	> 100dB (@ 1kHz F.S. IHF-A 22kHz-LPF)
7) T.H.D.+N	:	< 0.1% (@ 1kHz F.S. 22kHz-LPF)
8) DATA RETENTION	:	> 2 years

{F.S.=digital full-scale level}
{0dBu=0.775Vrms}

GENERAL SPECIFICATIONS

1) DIMENNSIONS	:	740(W)×286(D)×100(H)mm
2) WEIGHT	:	5.7kg
3) POWER SUPPLY	:	85～132, 187～264VAC
-CONSUMPTIONS	:	10.0W(max)
4) OPERATING TEMPERATURE	:	0～40 ℃
5) ACCESSORIES	:	AC CORD

OPTIONS

1) EXPRESSION PEDAL	:	XVP-10,EXP-2
2) VOLUME PEDAL	:	XVP-10,KVP-002
3) PEDAL SW	:	PS-1,PS-2
4) DAMPER PEDAL	:	DS-1,DS-2
5) EXTERNAL CONTROLLER	:	EC5
6) MEMORY CARD	:	SRC-512

2. FULL VIEW

W=740mm
D=286mm
H=100mm
Weight=5.7Kg

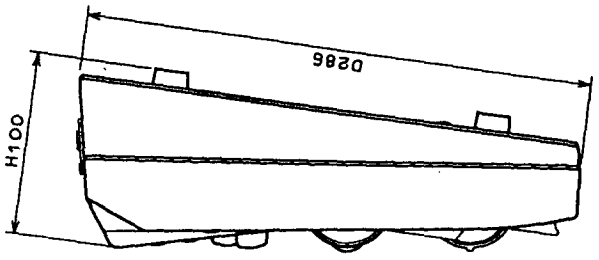

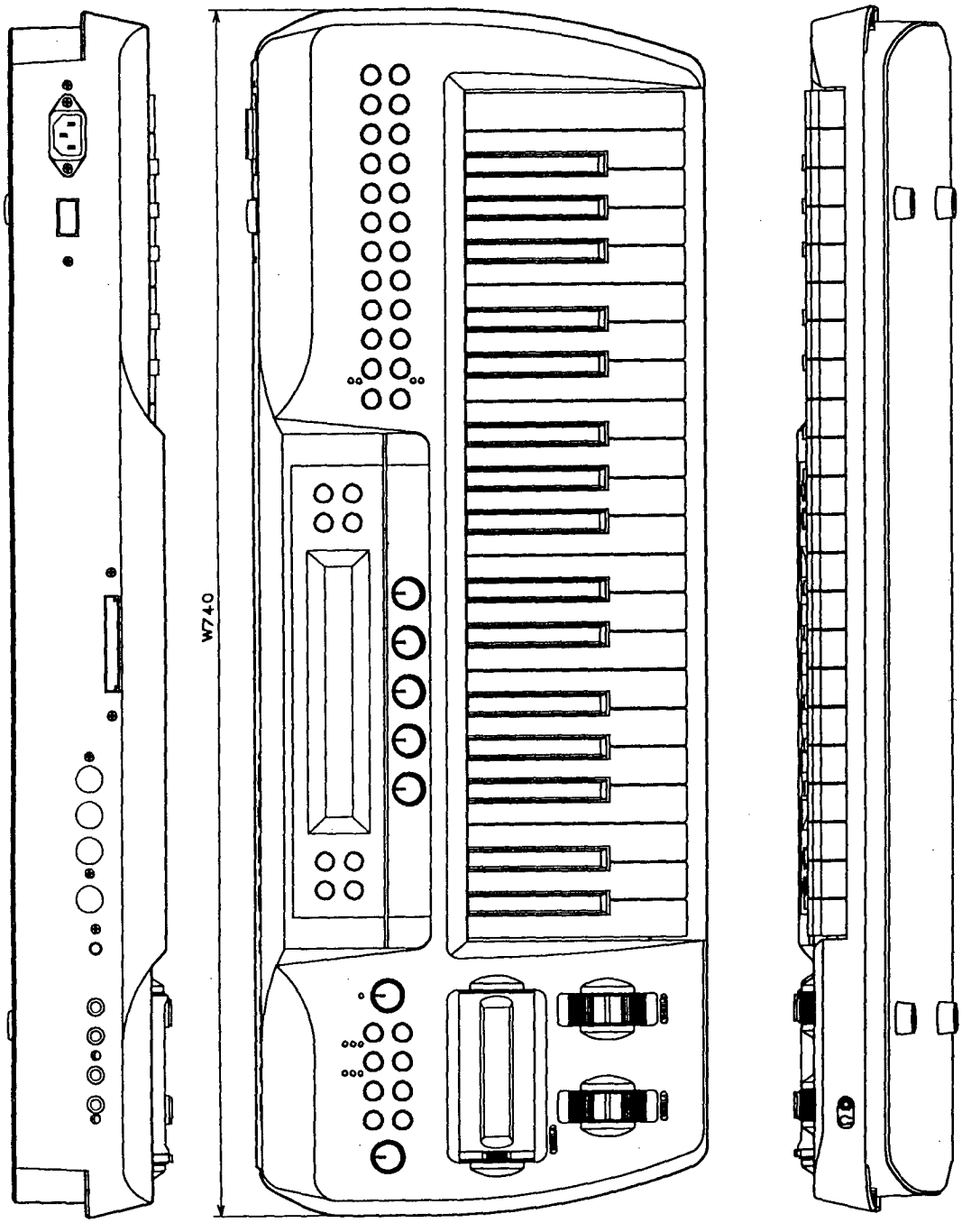

Lower case disassembly

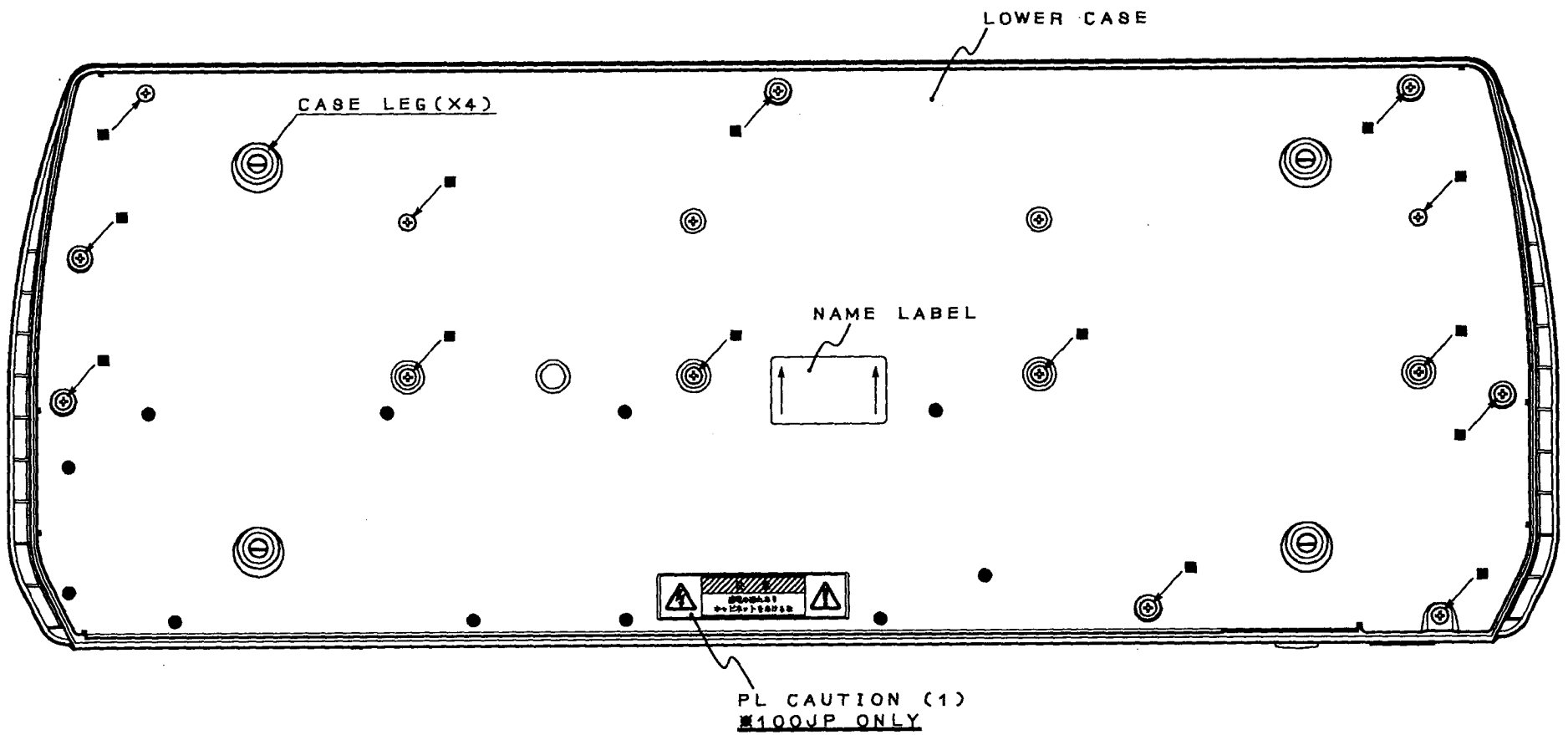

MARK	SCREW	Q'TY
■	BT B BZMC 4X10	14
●	BT B BZMC 3X8	11

Harness connections

CN No.	WIRE COLOR	HARNESS No.	CONNECTION	CN No.	WIRE COLOR	HARNESS No.	CONNECTION
CN2A	YLW·BRN	HNS-2241	KLM-1849	CN10A	SHIELD	HNS-2256	KLM-1850
CN3A	GRN·BRN	HNS-2242	KLM-1849	CN11A	PRL·RED	HNS-2248	KLM-1880
CN4A	SHIELD	HNS-2255	KLM-1849	CN12A	SHIELD	HNS-2257	KLM-1851
CN5A	GRY·BRN	HNS-2243	KLM-1848	CN13B	ORG·RED	HNS-2249	KLM-1856
CN6A	WHT·BRN	HNS-2244	KLM-1848	CN14A	BRN·ORG	HNS-2250	LCD
CN7A	ORG·RED	HNS-2245	KLM-1847	CN22A	FLAT	HNS-2263	KLM-1862
CN8A	YLW·RED	HNS-2246	KLM-1847	CN23A	FLAT	HNS-2264	KEYBOARD
CN9A	GRN·RED	HNS-2247	KLM-1850	CN24A			

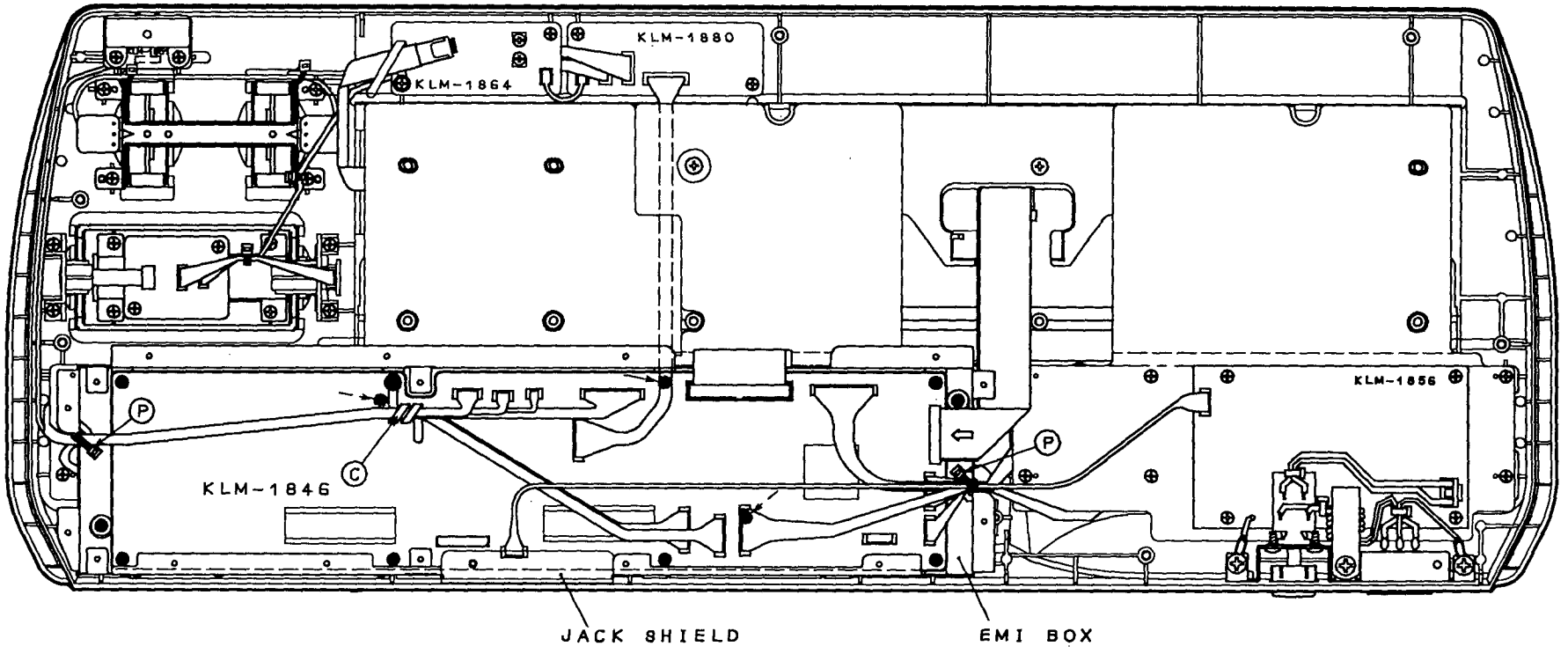

Ⓟ : PLT-1M

Ⓒ : CS-8

MARK	SCREW	Q'TY
●	BT B ZMC 3X8	12

Upper case disassembly (1/3)

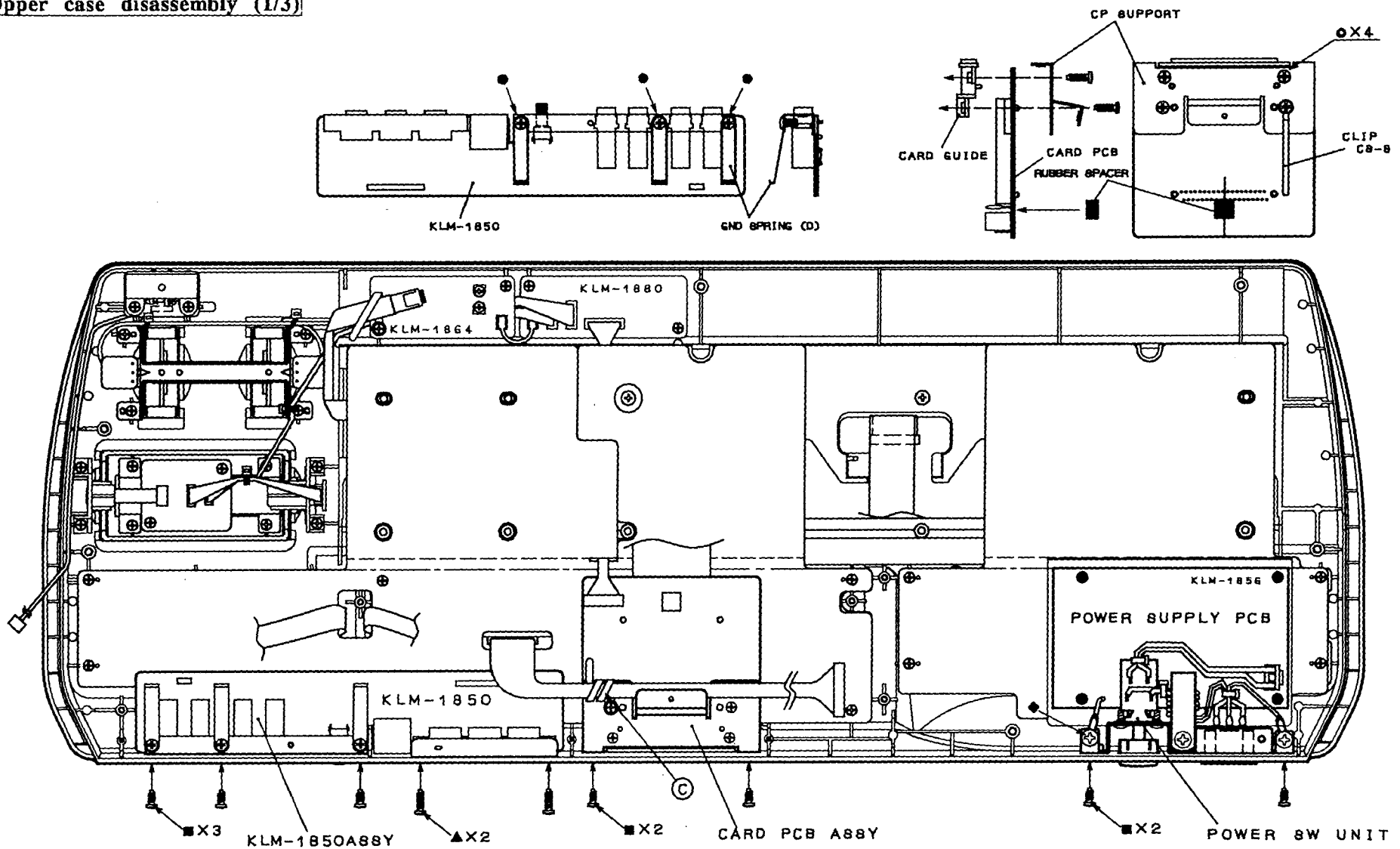

Ⓒ : C8-8

MARK	SCREW	Q'TY
◆	TS S8E ZMC 4X10	1
▲	BT B BZMC 3X12	2
○	BT B ZMC 3X12	4
■	BT B BZMC 3X8	7
●	BT B ZMC 3X8	7

Upper case disassembly (2/3)

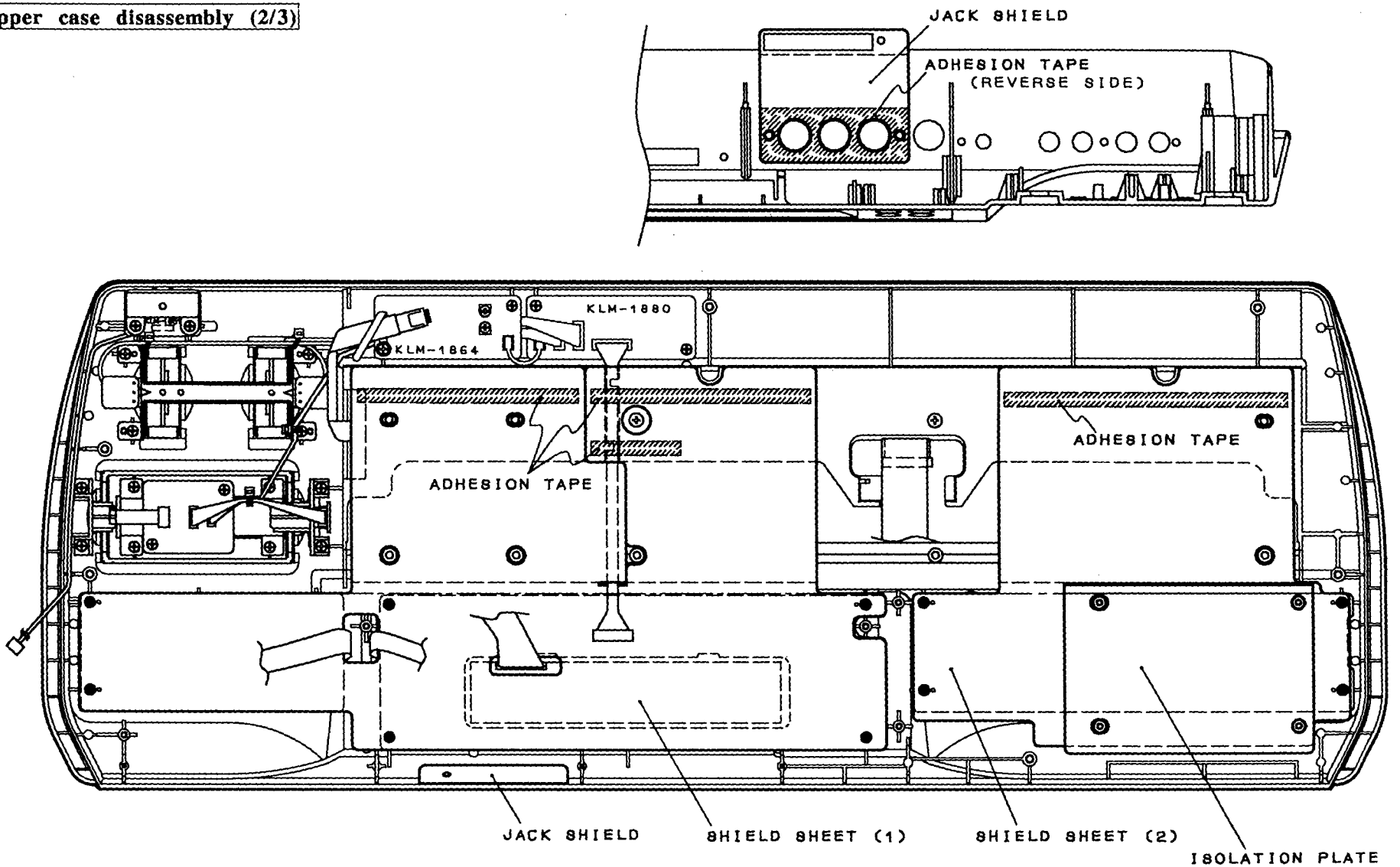

MARK	SCREW	Q'TY
●	BT B ZMC 3X8	10

Upper case disassembly (3/3)

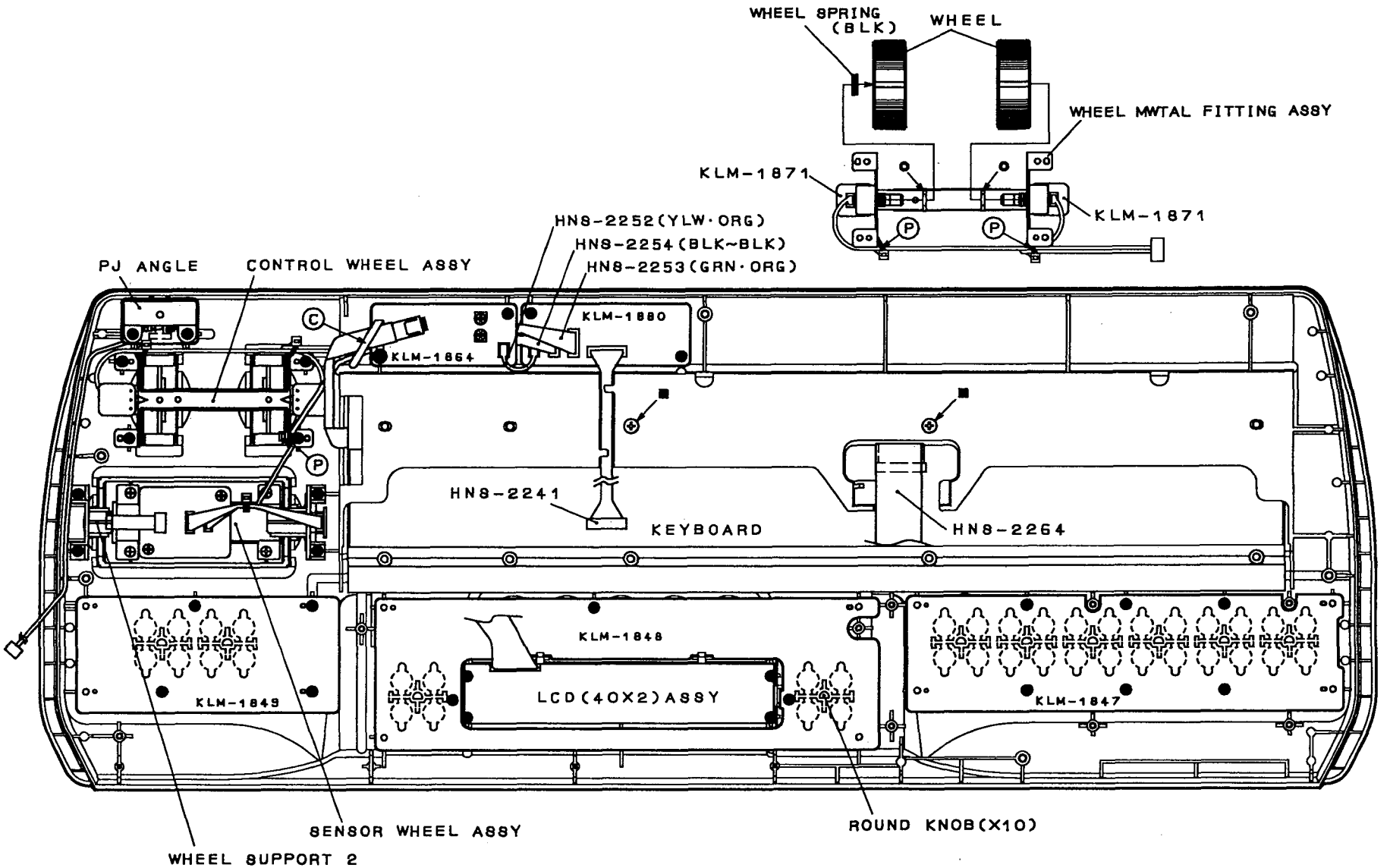

Ⓟ :PLT-1M

Ⓒ :CS-8

MARK	SCREW	Q'TY
○	VN BZMC 3(※11)	2
■	BT B BZMC 4X10	2
●	BT B ZMC 3X8	31

Ribbon controller unit disassembly

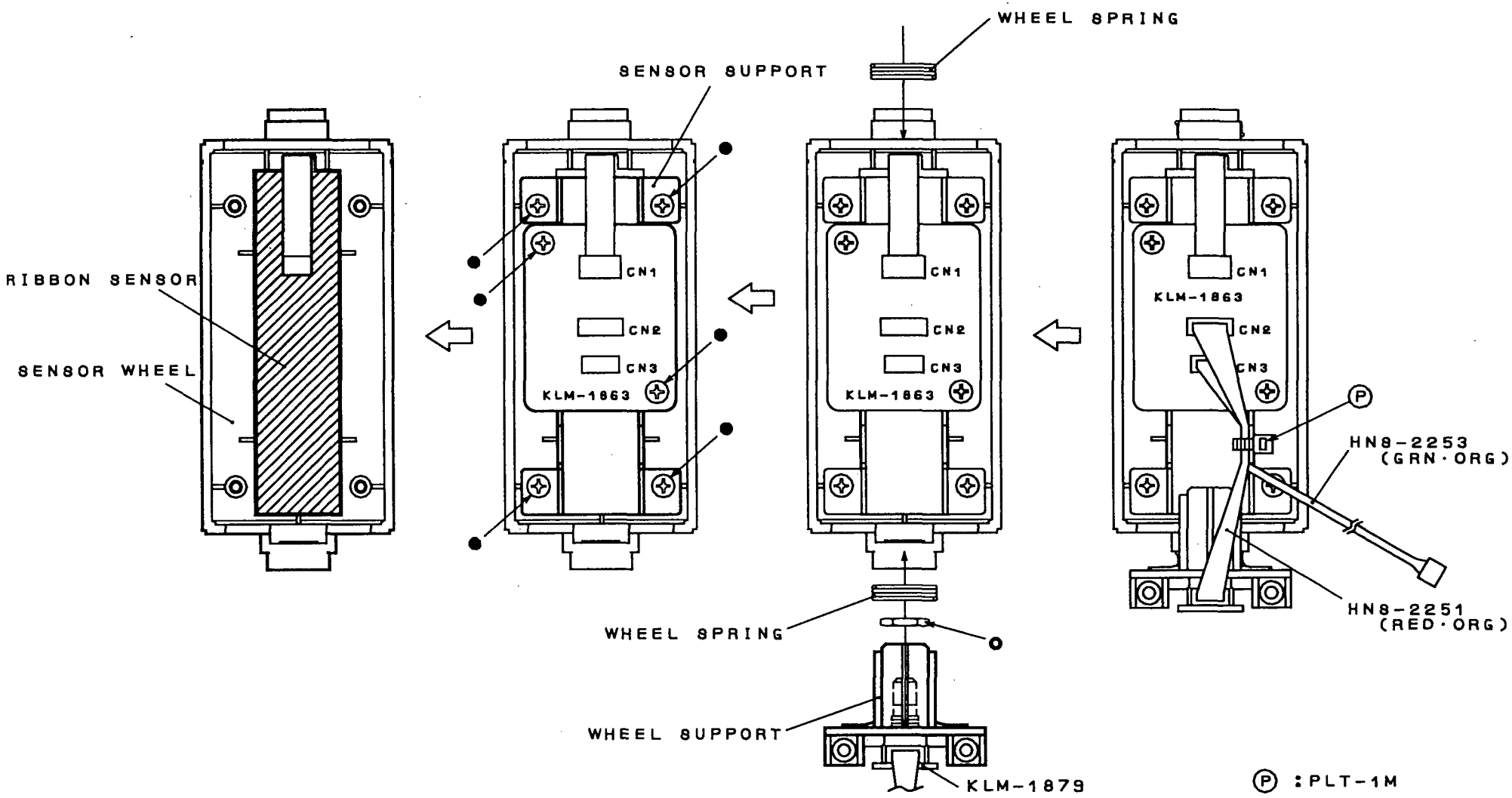

MARK	SCREW	Q'TY
○	VN BZMC 7	2
●	BT B ZMC 3X8	6

4. BLOCK DIAGRAM

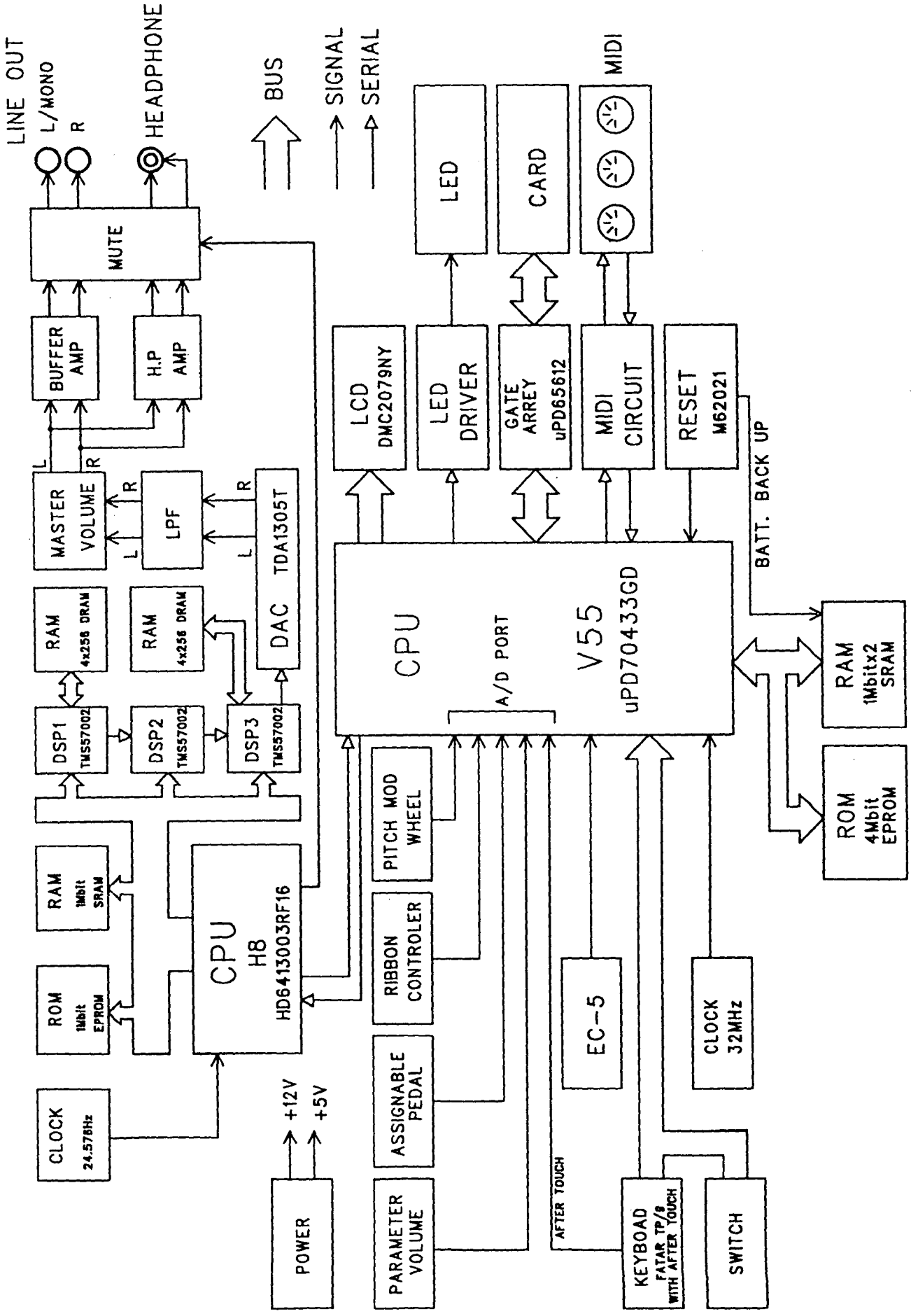

KLM-1880

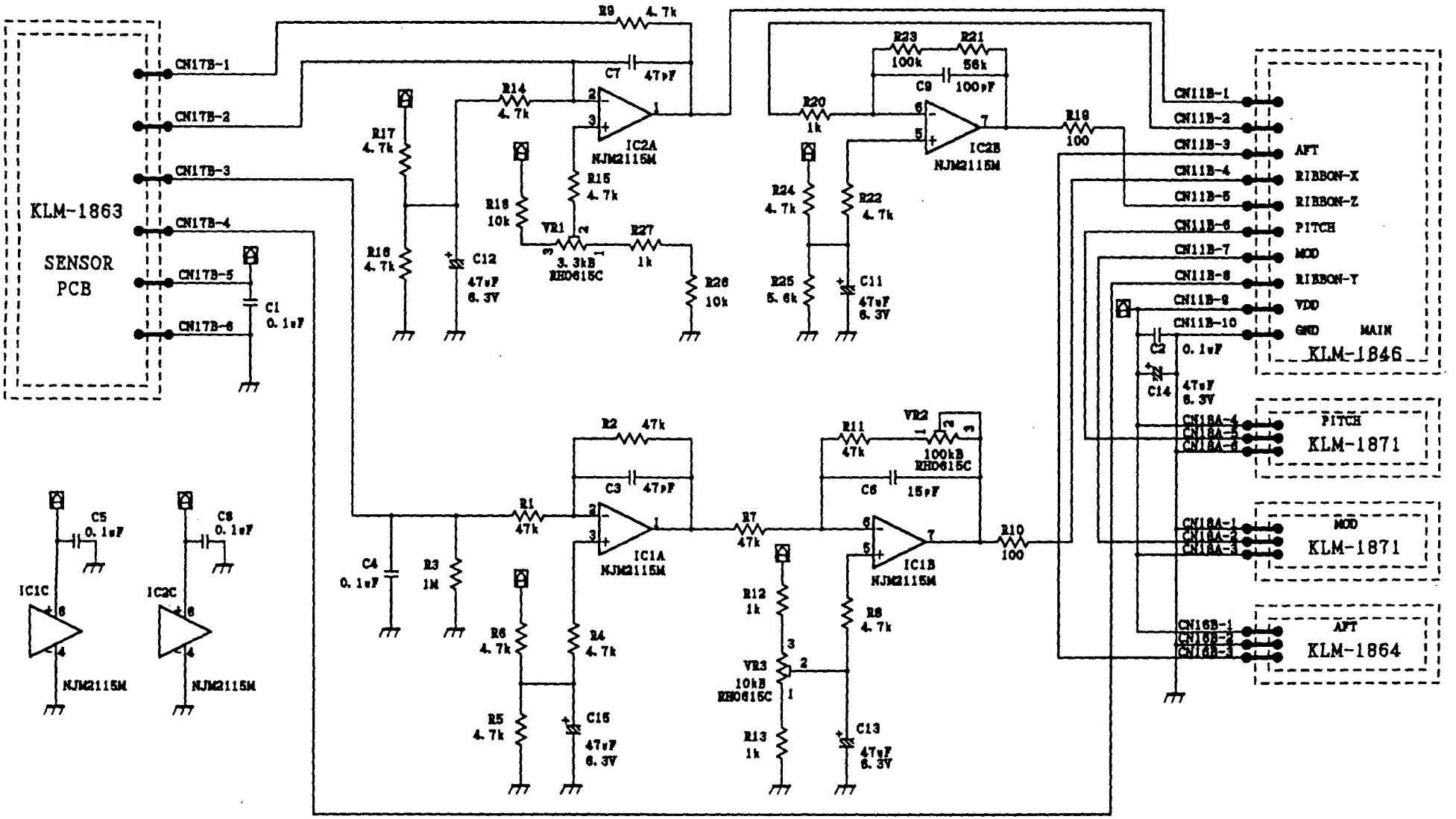
KLM-1863
SENSOR PCB
CN17B-1
CN17B-2
CN17B-3
CN17B-4
CN17B-5
CN17B-6
C1 0.1uF
R9 4.7k
C7 47pF
R14 4.7k
R17 4.7k
R15 4.7k
R18 10k
VR1 3.3kB RH0615C
R27 1k
R16 4.7k
C12 47uF 6.3V
R26 10k
IC2A NJM2115M
R23 100k
R21 56k
C9 100pF
R20 1k
R24 4.7k
R22 4.7k
R25 5.6k
C11 47uF 6.3V
IC2B NJM2115M
R19 100
R2 47k
C3 47pF
R1 47k
C4 0.1uF
R3 1M
R6 4.7k
R4 4.7k
R5 4.7k
C15 47uF 6.3V
IC1A NJM2115M
VR2 100kB RH0615C
R11 47k
C6 15pF
R7 47k
R12 1k
VR3 10kB RH0615C
R13 1k
R8 4.7k
C13 47uF 6.3V
IC1B NJM2115M
R10 100
C5 0.1uF
IC1C NJM2115M
C8 0.1uF
IC2C NJM2115M
CN11B-1
CN11B-2
CN11B-3 AFT
CN11B-4 RIBBON-X
CN11B-5 RIBBON-Z
CN11B-6 PITCH
CN11B-7 MOD
CN11B-8 RIBBON-Y
CN11B-9 VDD
CN11B-10 GND MAIN
KLM-1846
C2 0.1uF
C14 47uF 6.3V
CN18A-4
CN18A-5
CN18A-6
PITCH
KLM-1871
CN18A-1
CN18A-2
CN18A-3
MOD
KLM-1871
CN16B-1
CN16B-2
CN16B-3
AFT
KLM-1864

KLM-1846

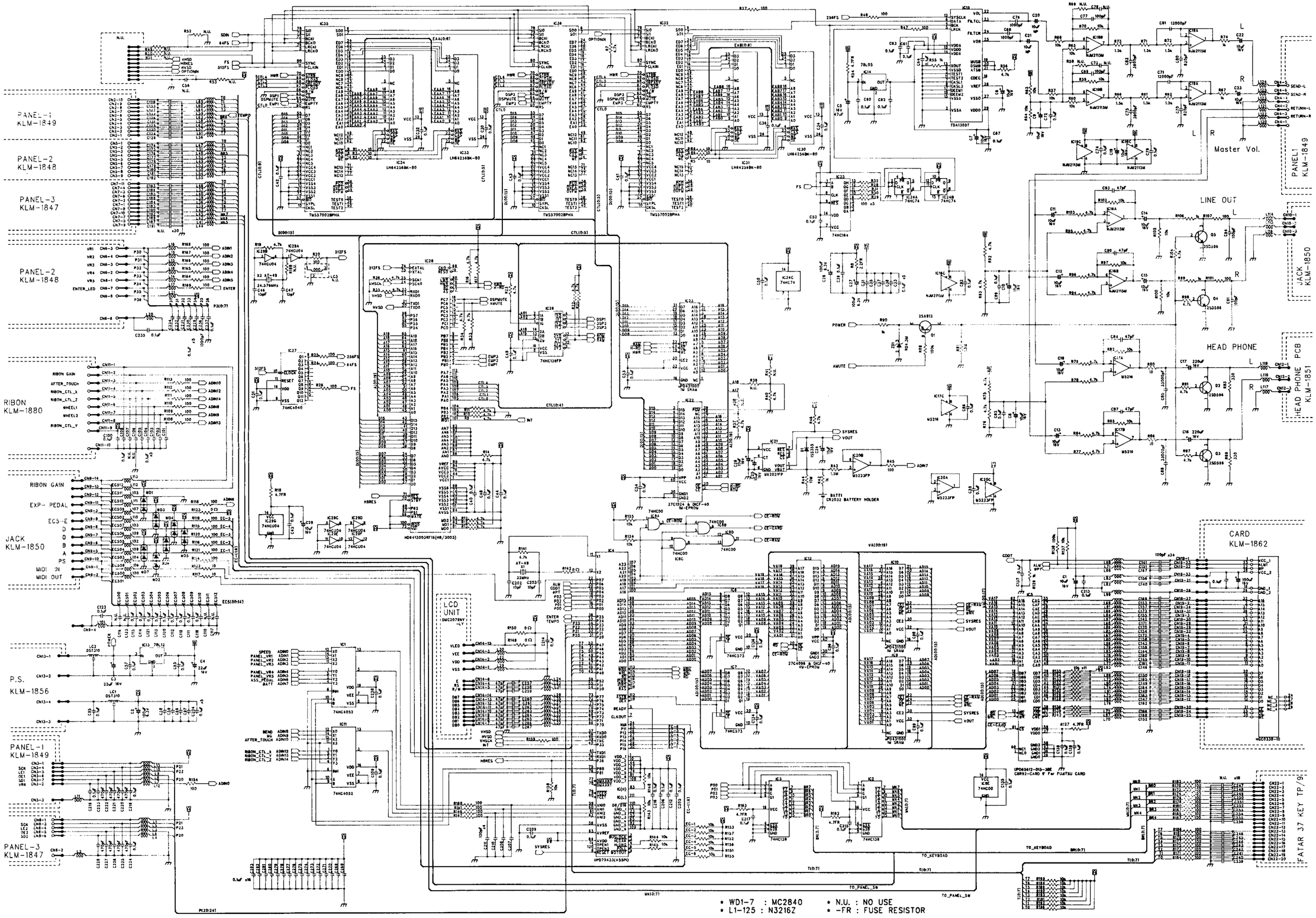
PANEL-1
KLM-1849
PANEL-2
KLM-1848
PANEL-3
KLM-1847
PANEL-2
KLM-1848
RIBON
KLM-1880
JACK
KLM-1850
P.S.
KLM-1856
PANEL-1
KLM-1849
PANEL-3
KLM-1847
LCD
UNIT
DMC207H-LY
Master Vol.
PANEL1
KLM-1849
LINE OUT
JACK
KLM-1850
HEAD PHONE
HEAD PHONE PCB
KLM-1851
CARD
KLM-1862
FATAR 37 KEY TP/SW
* WD1-7 : MC2840
* L1-125 : N3216Z
* N.U. : NO USE
* -FR : FUSE RESISTOR

KLM-1864

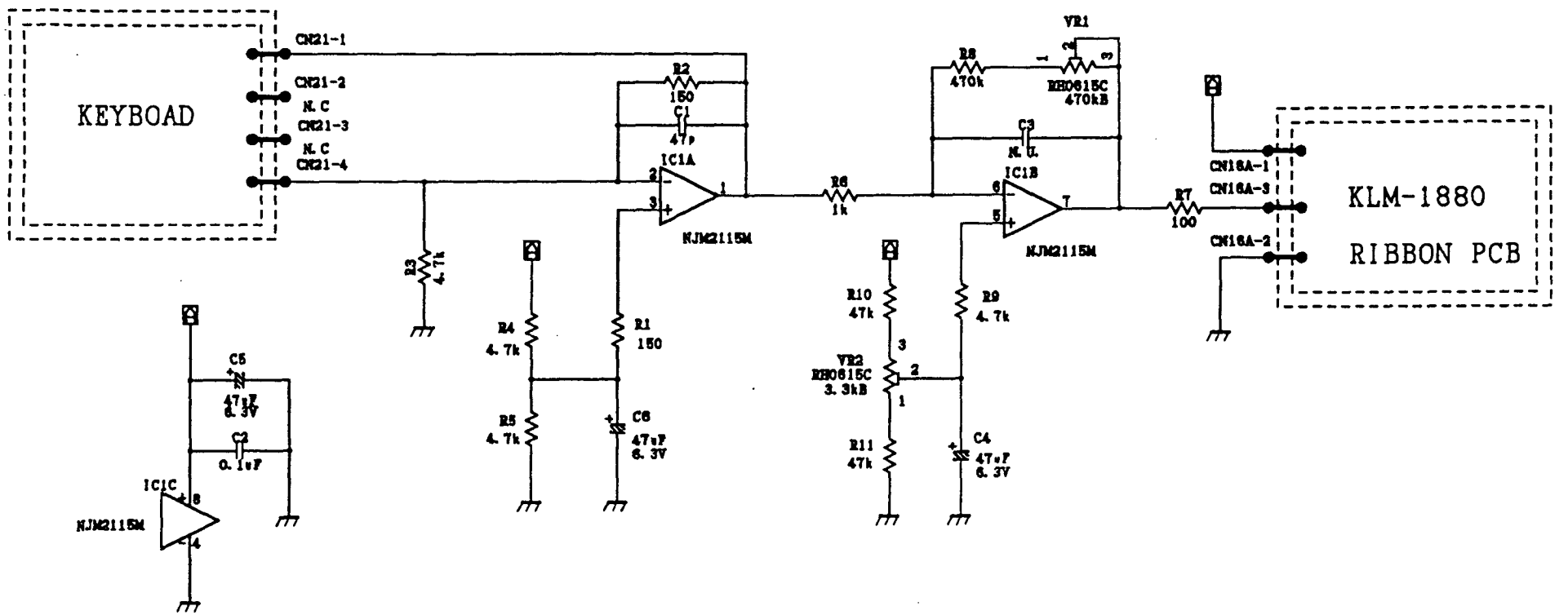

N. U. :NO USED

KLM-1863

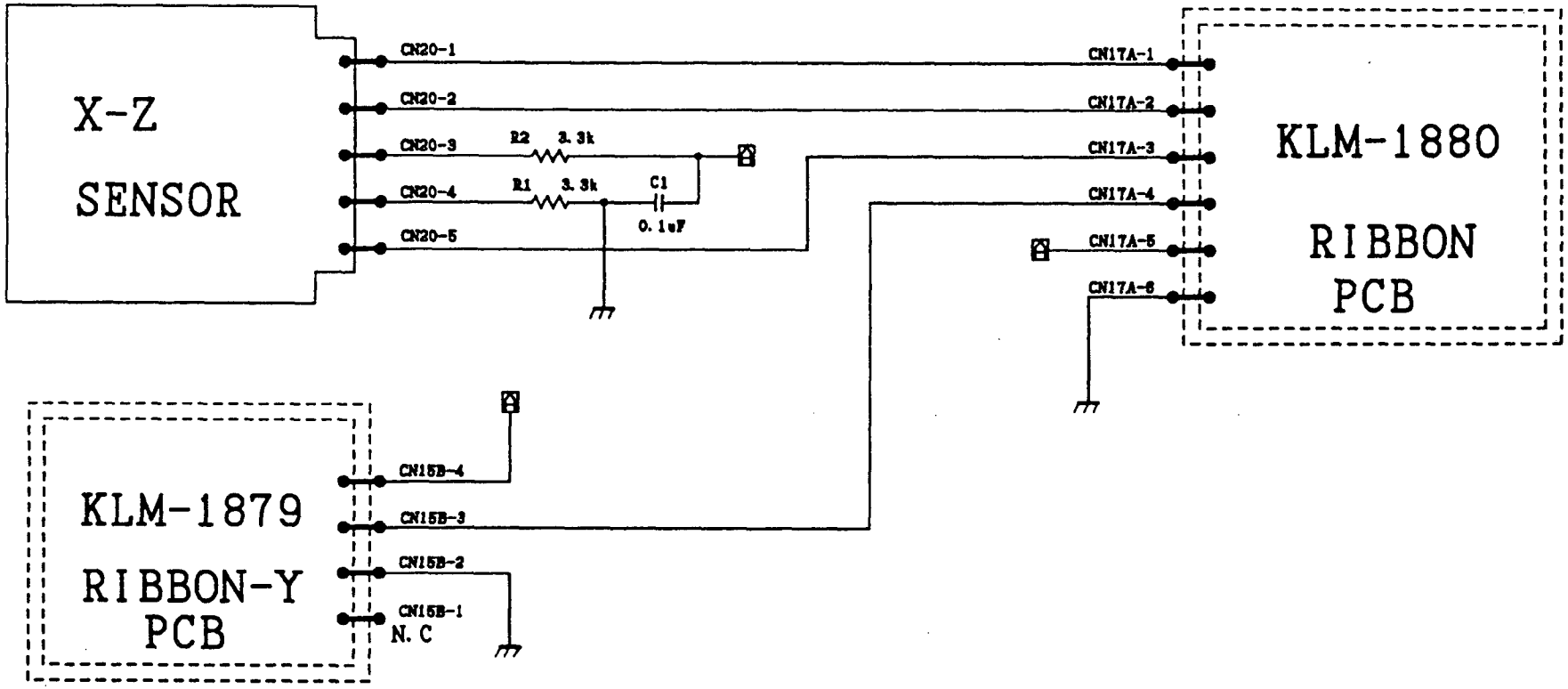
X-Z
SENSOR
CN20-1
CN20-2
CN20-3
CN20-4
CN20-5
R2 3.3k
R1 3.3k
C1
0.1uF
CN17A-1
CN17A-2
CN17A-3
CN17A-4
CN17A-5
CN17A-6
KLM-1880
RIBBON
PCB
KLM-1879
RIBBON-Y
PCB
CN15B-4
CN15B-3
CN15B-2
CN15B-1
N.C

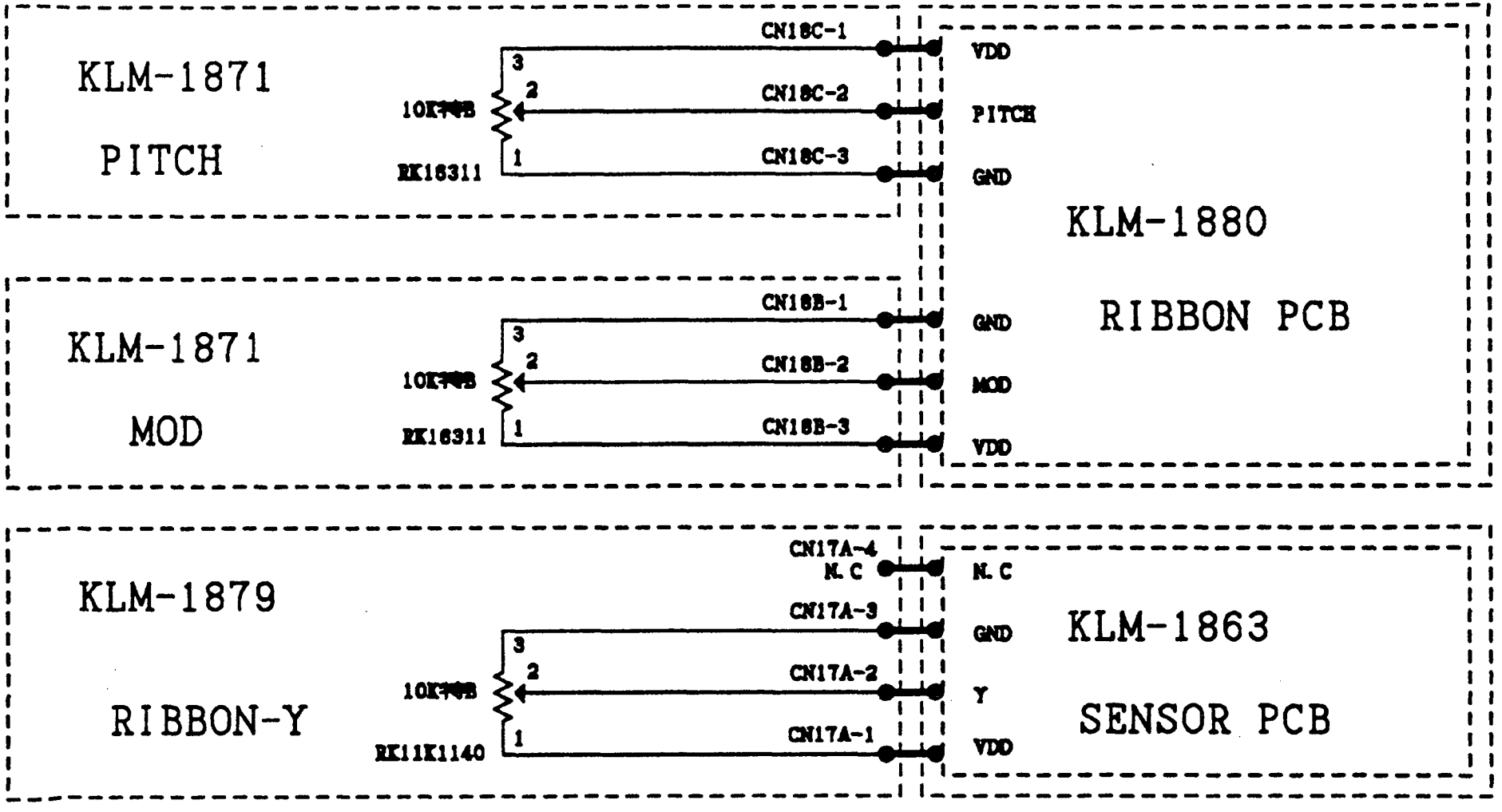
KLM-1871
PITCH
10K
RK16311
CN18C-1
CN18C-2
CN18C-3
VDD
PITCH
GND
KLM-1871
MOD
10K
RK16311
CN18B-1
CN18B-2
CN18B-3
GND
MOD
VDD
KLM-1880
RIBBON PCB
KLM-1879
RIBBON-Y
10K
RK11K1140
CN17A-4
N.C
CN17A-3
CN17A-2
CN17A-1
N.C
GND
Y
VDD
KLM-1863
SENSOR PCB

KLM-1847

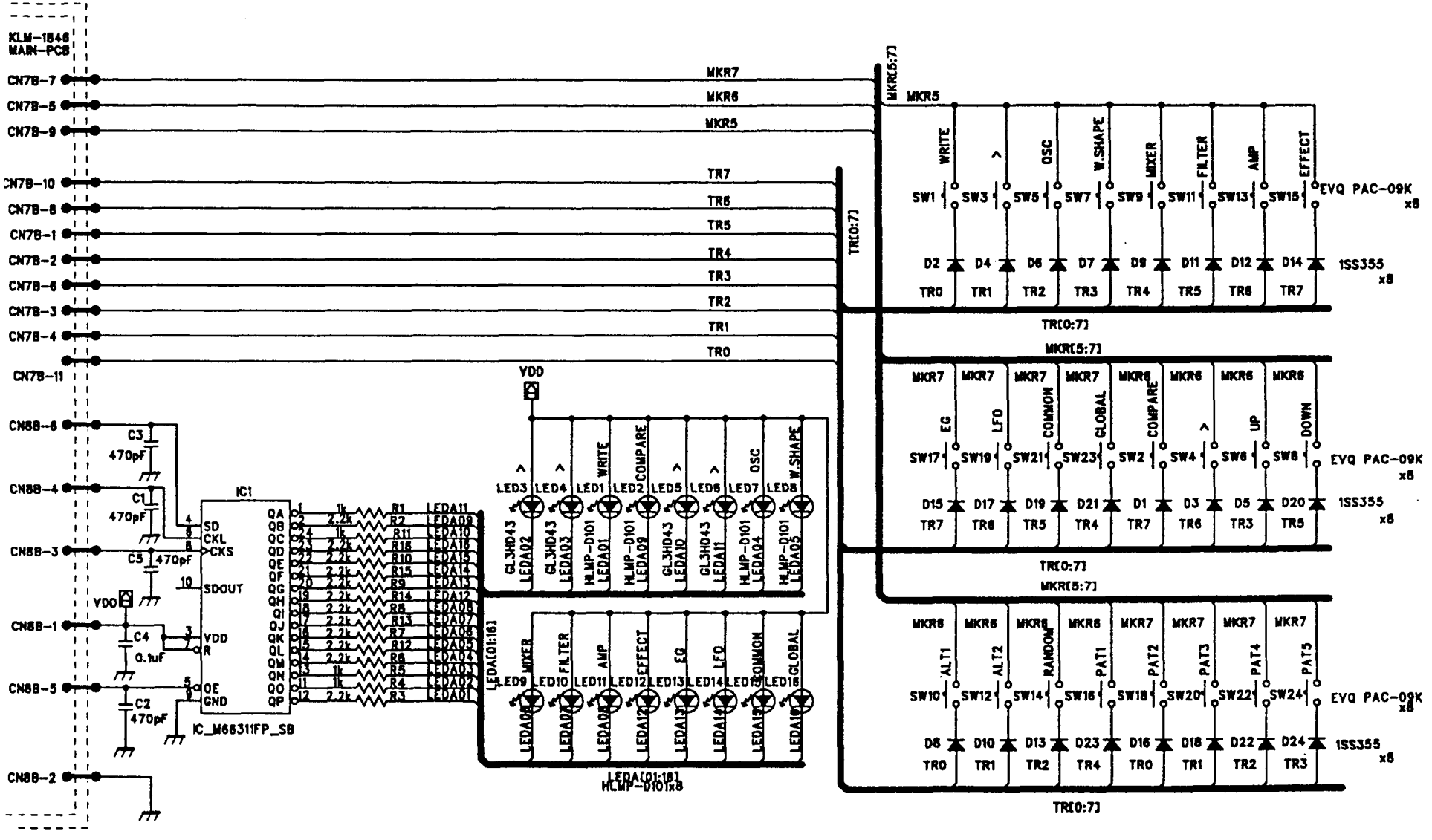
KLM-1846
MAIN-PCB
CN7B-7
CN7B-5
CN7B-9
CN7B-10
CN7B-8
CN7B-1
CN7B-2
CN7B-6
CN7B-3
CN7B-4
CN7B-11
CN8B-6
CN8B-4
CN8B-3
CN8B-1
CN8B-5
CN8B-2
MKR7
MKR6
MKR5
TR7
TR6
TR5
TR4
TR3
TR2
TR1
TR0
TR[0:7]
MKR[5:7]
WRITE
>
OSC
W.SHAPE
MIXER
FILTER
AMP
EFFECT
SW1
SW3
SW5
SW7
SW9
SW11
SW13
SW15
EVQ PAC-09K
x8
D2
D4
D6
D7
D9
D11
D12
D14
1SS355
x8
EG
LFO
COMMON
GLOBAL
COMPARE
UP
DOWN
SW17
SW19
SW21
SW23
SW2
SW4
SW6
SW8
D15
D17
D19
D21
D1
D3
D5
D20
ALT1
ALT2
RANDOM
PAT1
PAT2
PAT3
PAT4
PAT5
SW10
SW12
SW14
SW16
SW18
SW20
SW22
SW24
D8
D10
D13
D23
D16
D18
D22
D24
VDD
LED3
LED4
LED1
LED2
LED5
LED6
LED7
LED8
LED9
LED10
LED11
LED12
LED13
LED14
LED15
LED16
GL3HD43
HLMP-D101
LEDA[01:16]
HLMP-D101x8
IC1
IC_M66311FP_SB
SD
CKL
CKS
SDOUT
VDD
R
OE
GND
C1
C2
C3
C4
C5
470pF
0.1uF
R1
R2
R3
R4
R5
R6
R7
R8
R9
R10
R11
R12
R13
R14
R15
R16
1k
2.2k

KLM-1846

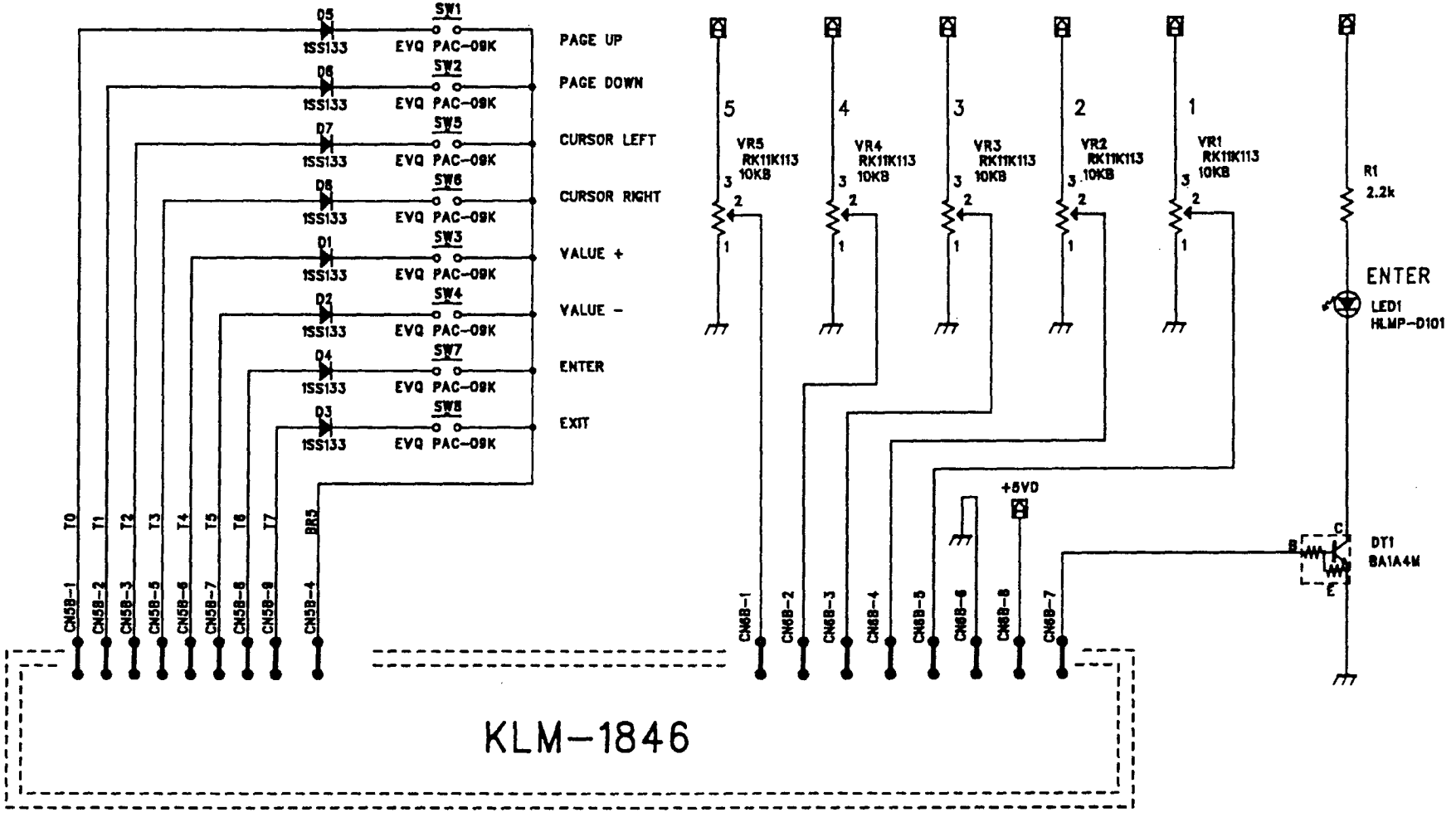
D5
1SS133
SW1
EVQ PAC-09K
PAGE UP
D6
1SS133
SW2
EVQ PAC-09K
PAGE DOWN
D7
1SS133
SW5
EVQ PAC-09K
CURSOR LEFT
D8
1SS133
SW6
EVQ PAC-09K
CURSOR RIGHT
D1
1SS133
SW3
EVQ PAC-09K
VALUE +
D2
1SS133
SW4
EVQ PAC-09K
VALUE -
D4
1SS133
SW7
EVQ PAC-09K
ENTER
D3
1SS133
SW8
EVQ PAC-09K
EXIT
VR5 RK11K113 10KB
VR4 RK11K113 10KB
VR3 RK11K113 10KB
VR2 RK11K113 10KB
VR1 RK11K113 10KB
R1
2.2k
ENTER
LED1
HLMP-D101
+5VD
DT1
BA1A4M
T0
T1
T2
T3
T4
T5
T6
T7
BR5
CN5B-1
CN5B-2
CN5B-3
CN5B-5
CN5B-6
CN5B-7
CN5B-8
CN5B-9
CN5B-4
CN6B-1
CN6B-2
CN6B-3
CN6B-4
CN6B-5
CN6B-6
CN6B-8
CN6B-7
KLM-1846

KLM-1849

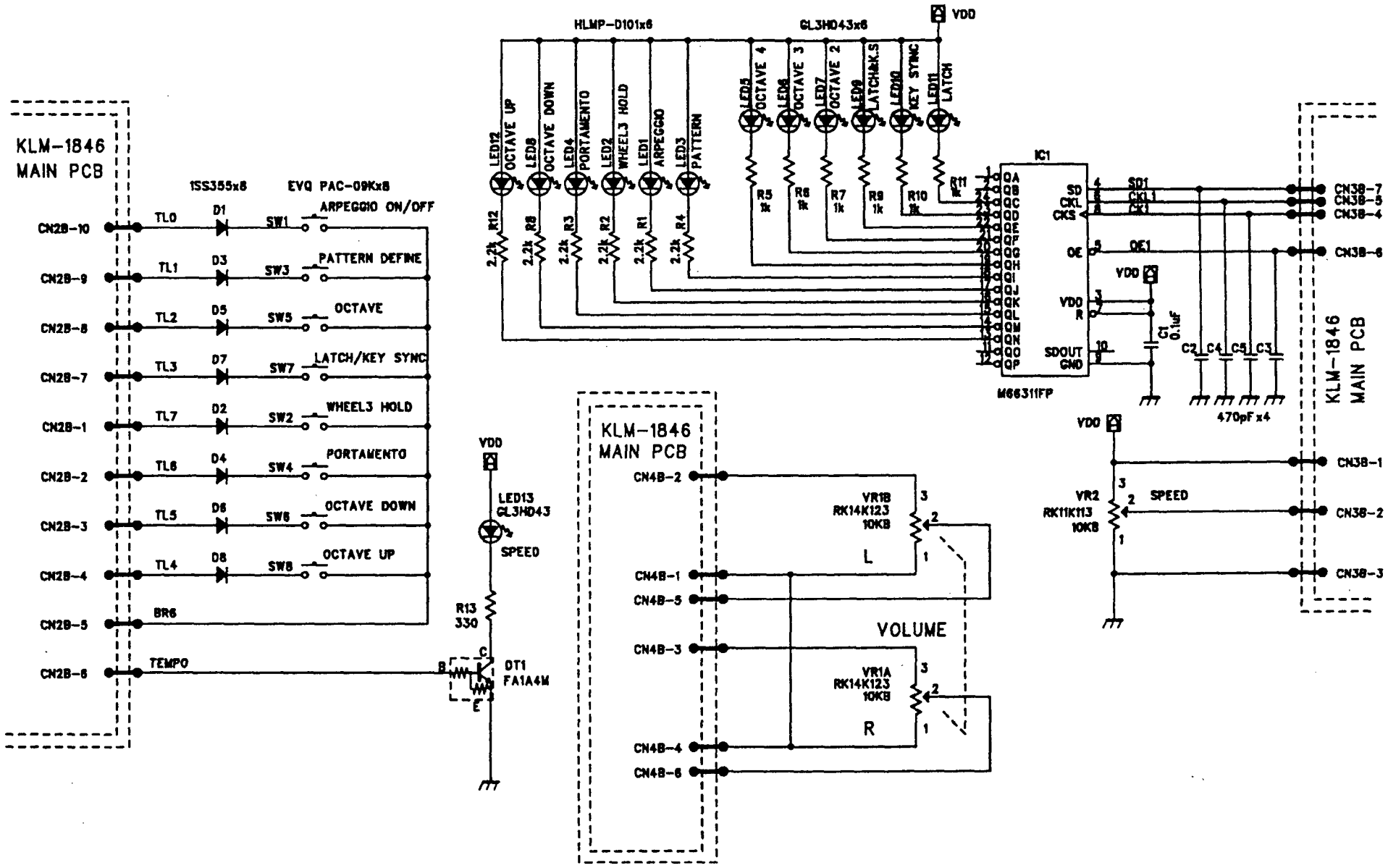
KLM-1846
MAIN PCB
1SS355x8
EVQ PAC-09Kx8
CN2B-10
CN2B-9
CN2B-8
CN2B-7
CN2B-1
CN2B-2
CN2B-3
CN2B-4
CN2B-5
CN2B-6
TL0
TL1
TL2
TL3
TL7
TL6
TL5
TL4
BR6
TEMPO
D1
D3
D5
D7
D2
D4
D6
D8
SW1
SW3
SW5
SW7
SW2
SW4
SW6
SW8
ARPEGGIO ON/OFF
PATTERN DEFINE
OCTAVE
LATCH/KEY SYNC
WHEEL3 HOLD
PORTAMENTO
OCTAVE DOWN
OCTAVE UP
HLMP-D101x6
GL3HD43x6
VDD
LED12 OCTAVE UP
LED8 OCTAVE DOWN
LED4 PORTAMENTO
LED2 WHEEL3 HOLD
LED1 ARPEGGIO
LED3 PATTERN
LED5 OCTAVE 4
LED6 OCTAVE 3
LED7 OCTAVE 2
LED9 LATCH&KS
LED10 KEY SYNC
LED11 LATCH
R12 2.2k
R8 2.2k
R3 2.2k
R2 2.2k
R1 2.2k
R4 2.2k
R5 1k
R6 1k
R7 1k
R9 1k
R10 1k
R11 1k
IC1
M66311FP
SD
CKL
CKS
OE
VDD
R
SDOUT
GND
SD1
CK1.1
CK1
OE1
C1 0.1uF
C2 C4 C5 C3
470pF x4
CN3B-7
CN3B-5
CN3B-4
CN3B-6
CN3B-1
CN3B-2
CN3B-3
LED13 GL3HD43
SPEED
R13 330
DT1 FA1A4M
KLM-1846
MAIN PCB
CN4B-2
CN4B-1
CN4B-5
CN4B-3
CN4B-4
CN4B-6
VR1B RK14K123 10KB
L
VOLUME
VR1A RK14K123 10KB
R
VR2 RK11K113 10KB
SPEED

KLM-1850/1851

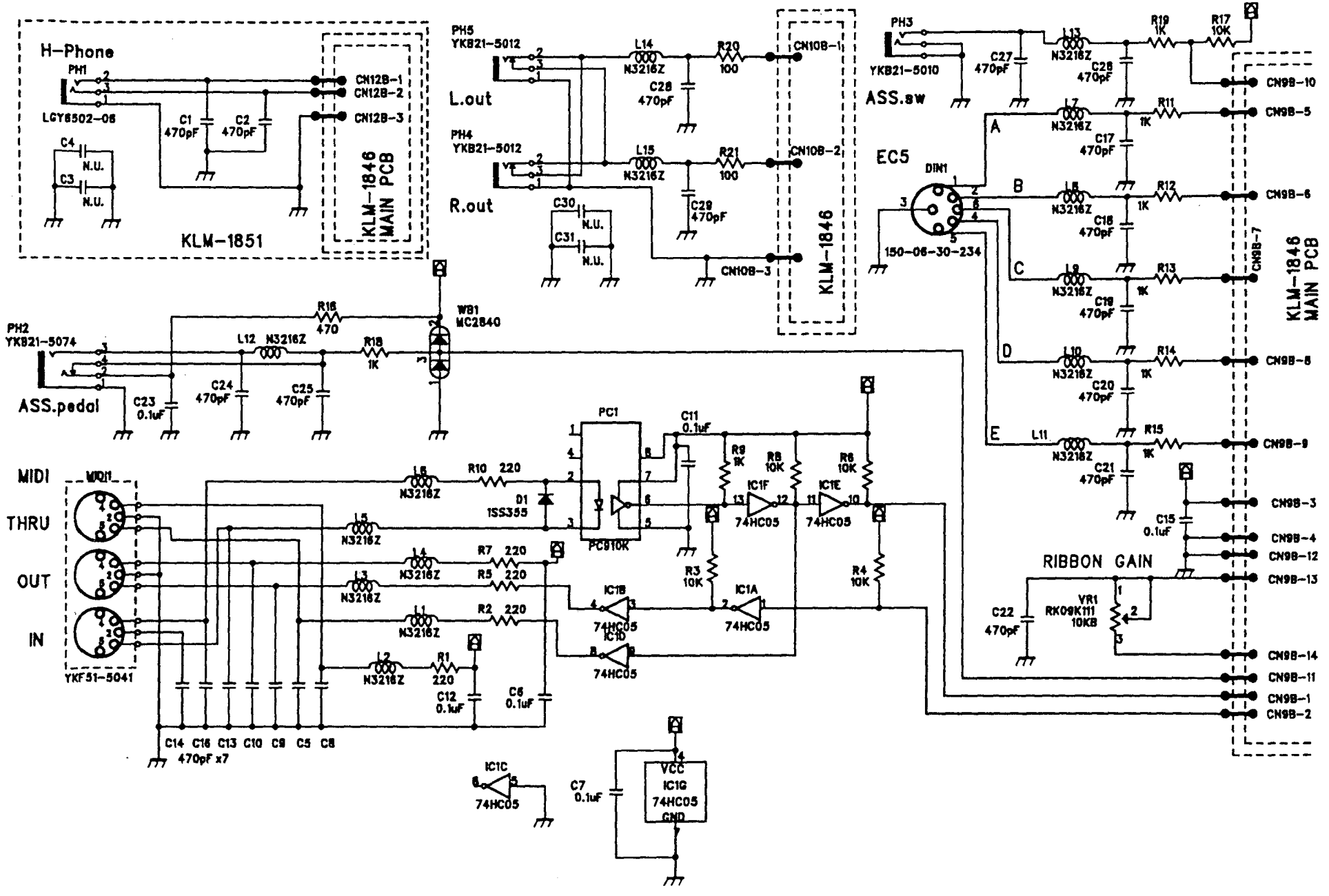

KLM-1846

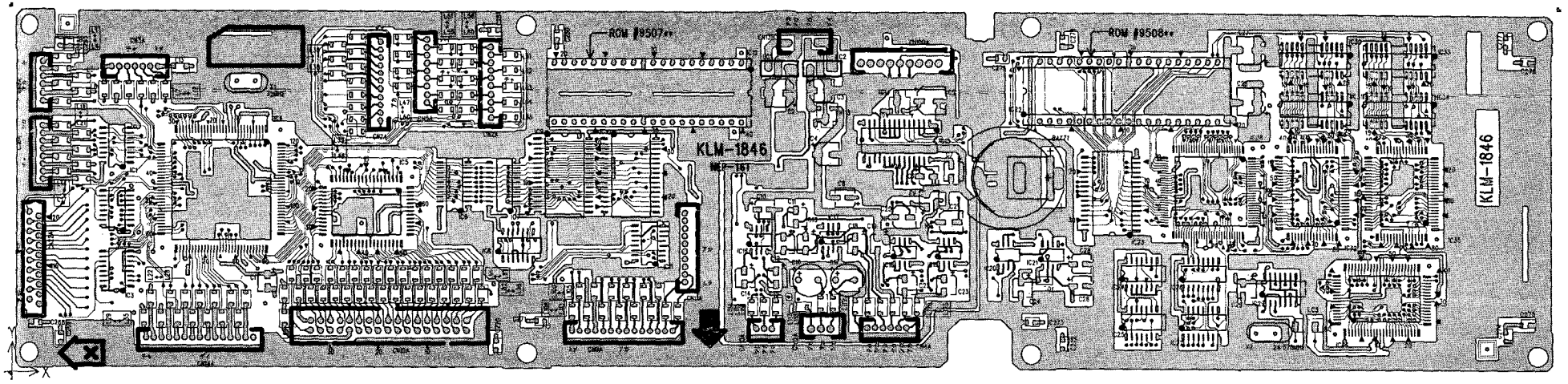

COMPONENT SIDE

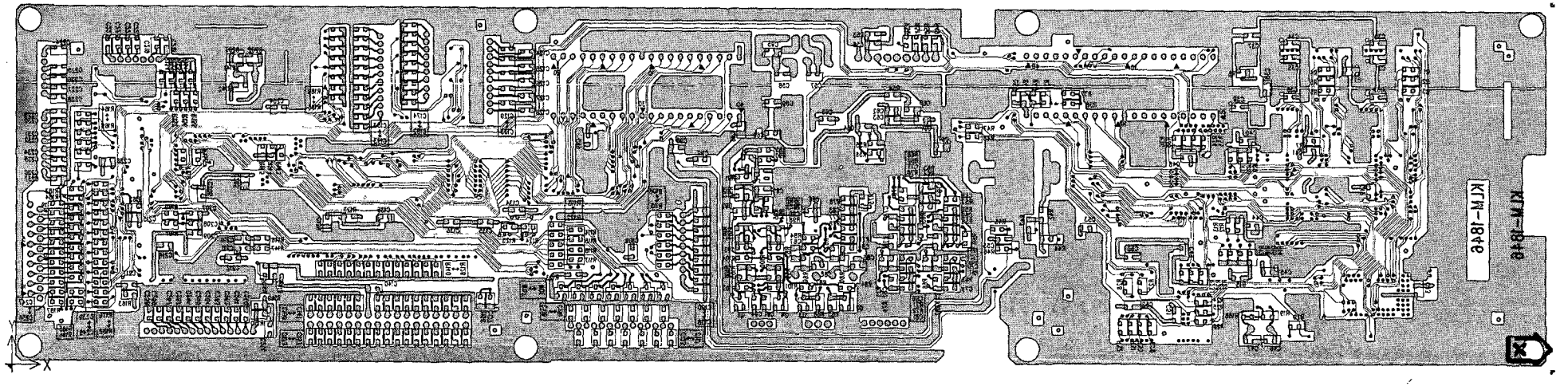

SOLDERING SIDE

KLM-1847/49

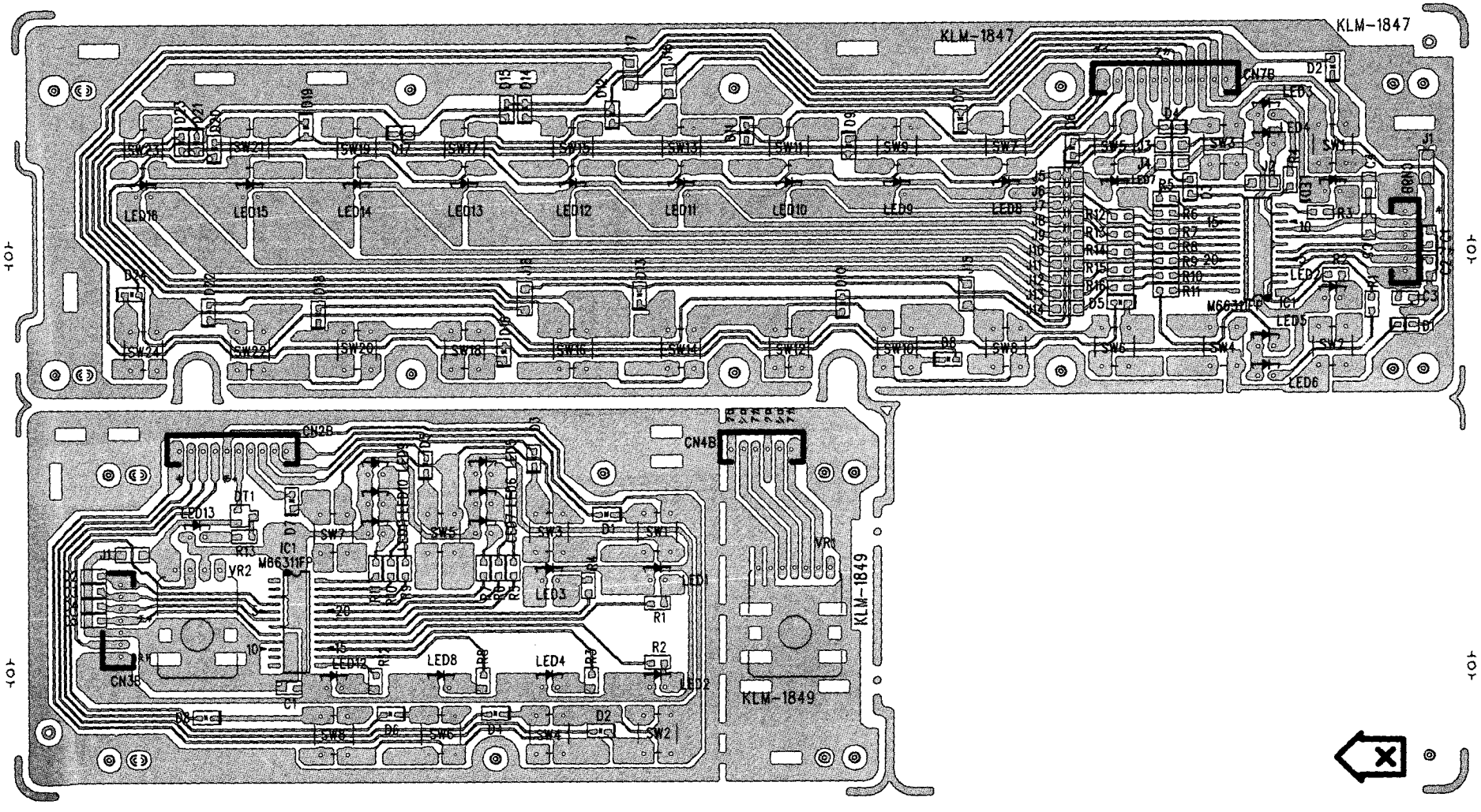

COMPONENT SIDE

KLM-1847

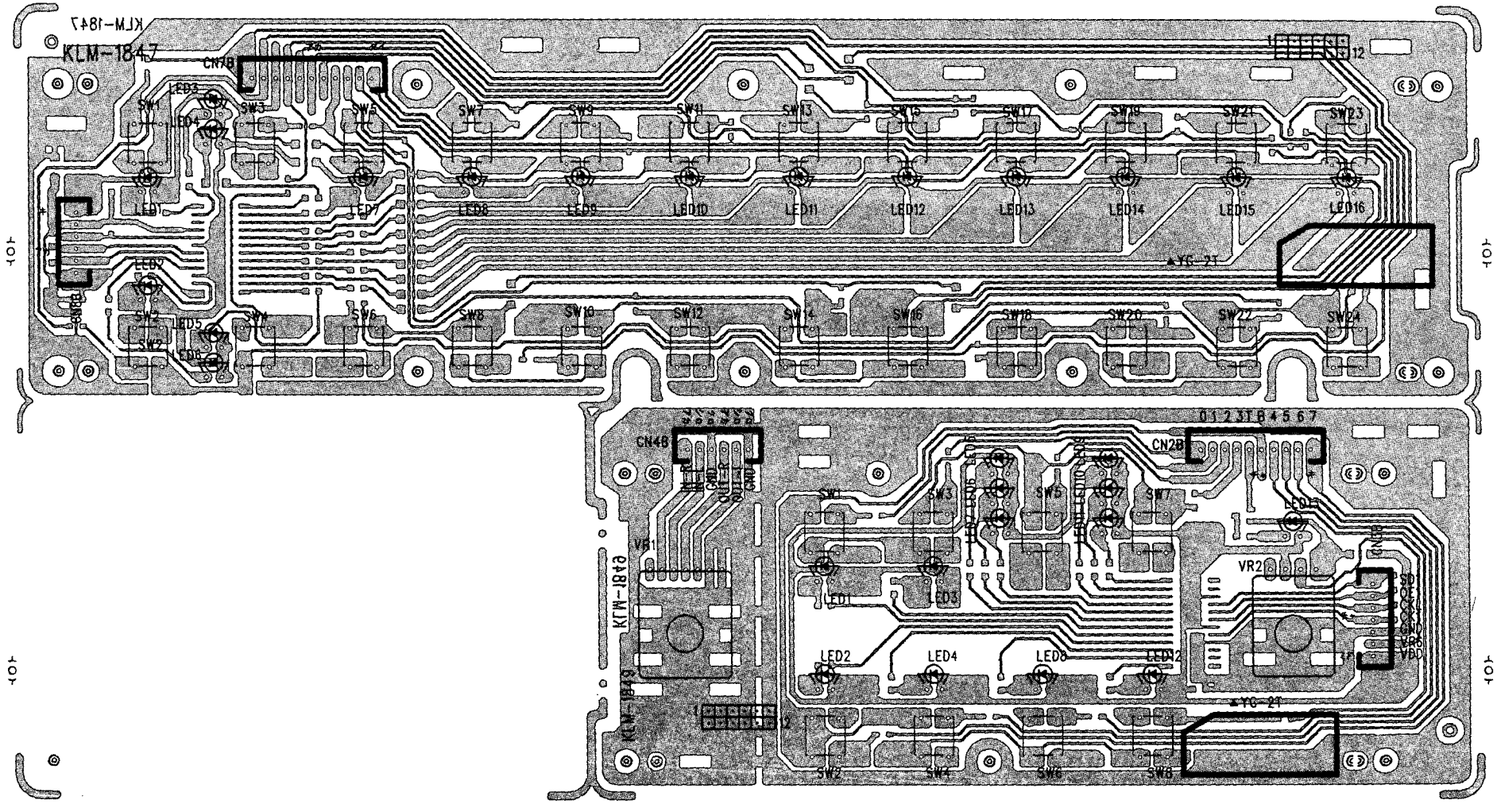

SOLDERING SIDE

KLM-1848

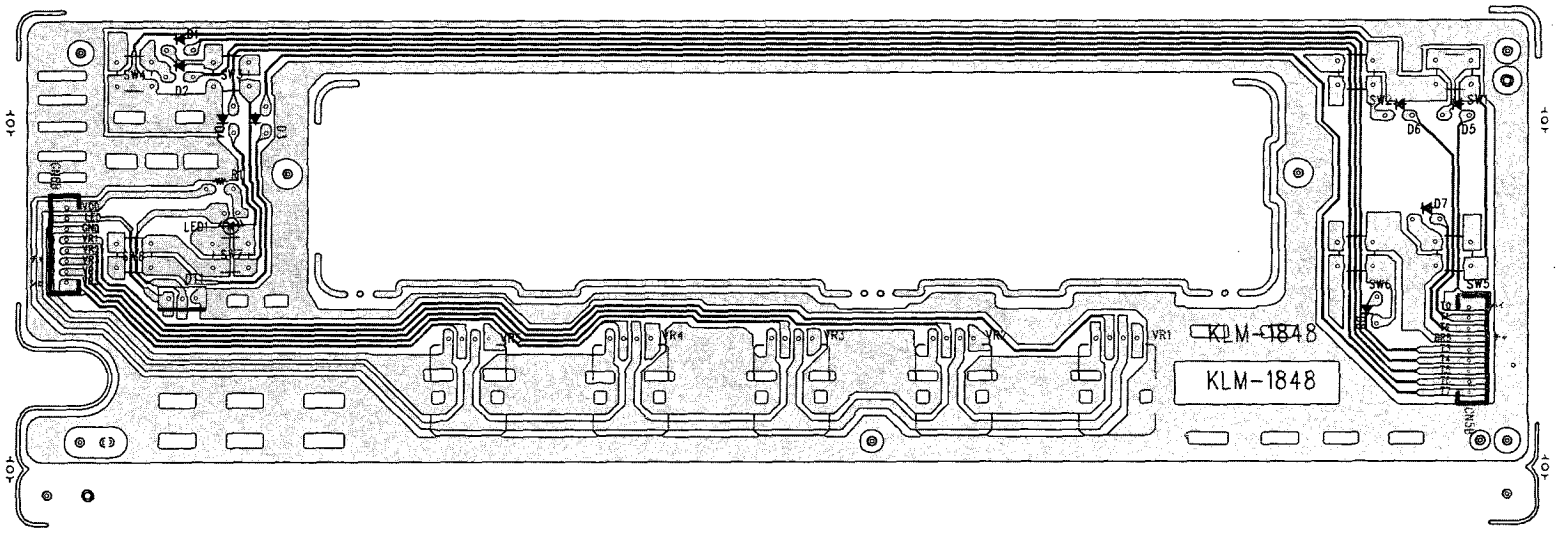

SOLDERING SIDE

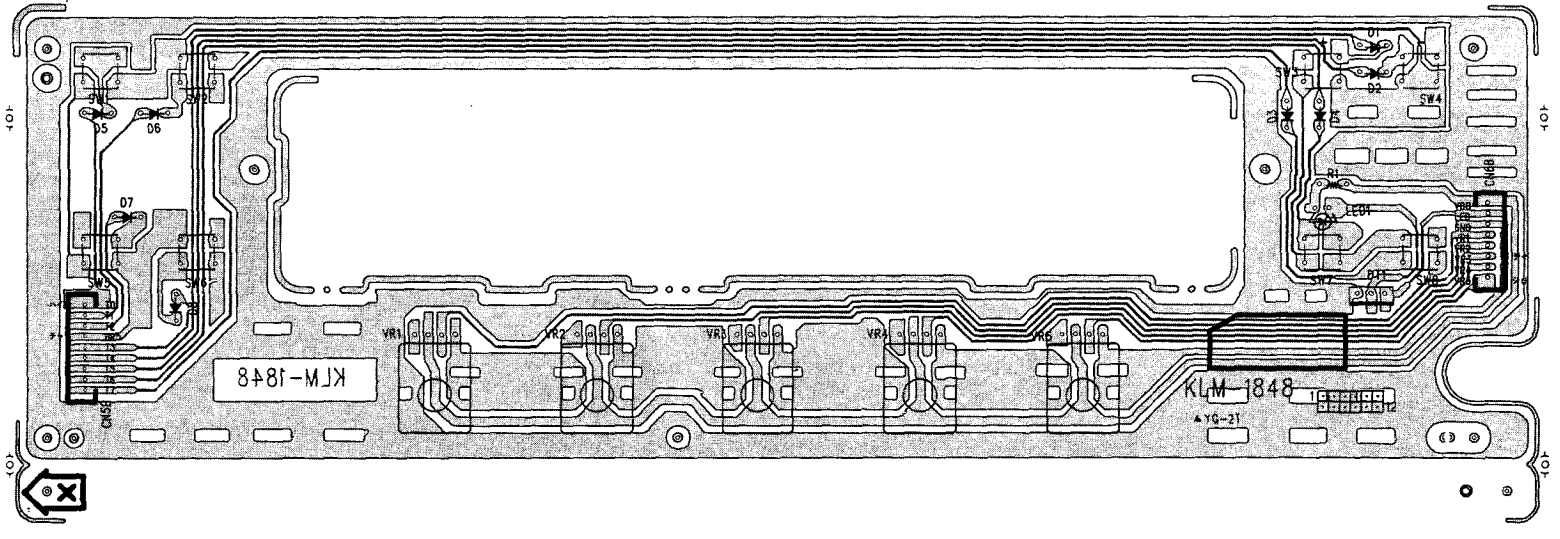

COMPONENT SIDE

KLM-1850

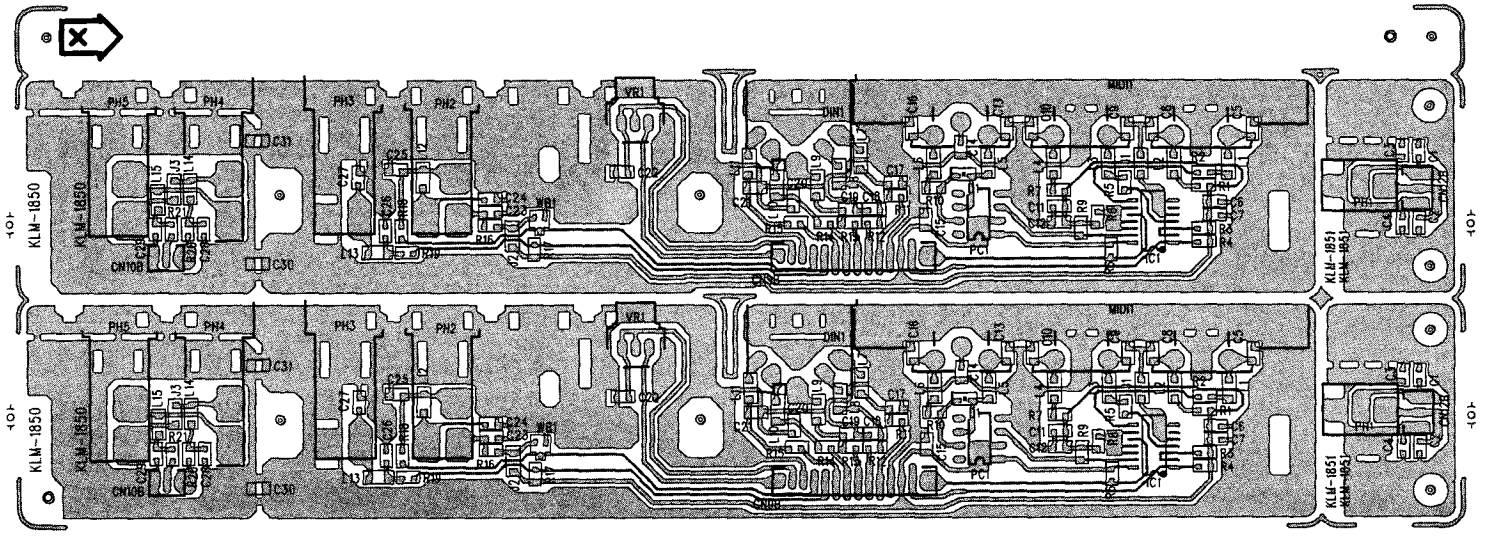

SOLDERING SIDE

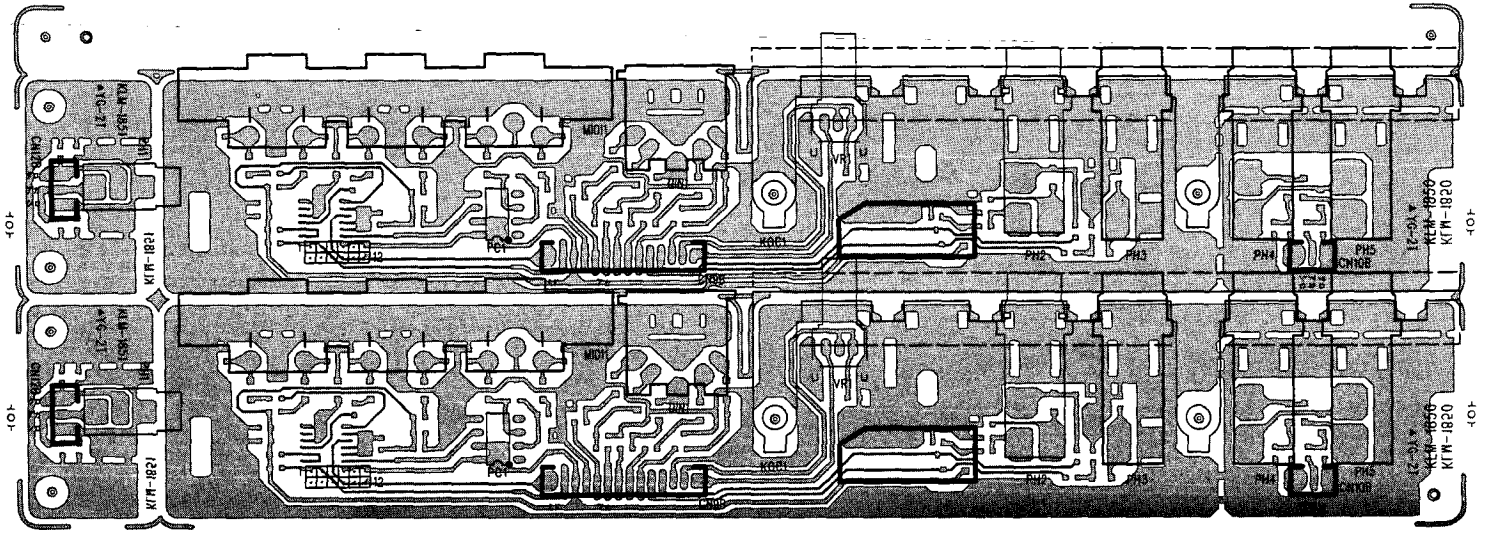

COMPONENT SIDE

KLM-1856

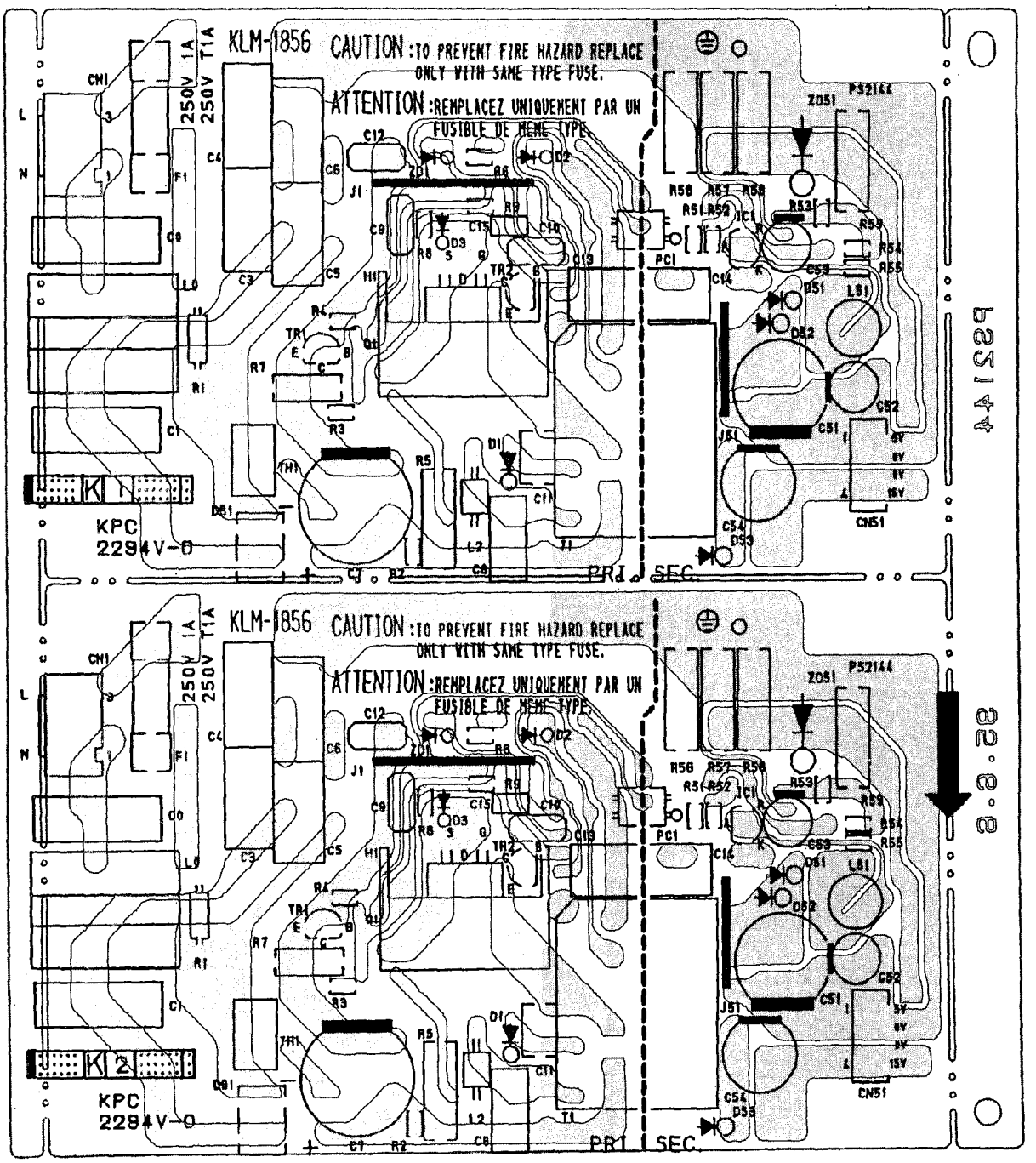
KLM-1856
CAUTION: TO PREVENT FIRE HAZARD REPLACE ONLY WITH SAME TYPE FUSE.
ATTENTION: REMPLACEZ UNIQUEMENT PAR UN FUSIBLE DE MEME TYPE.
250V 1A
250V T1A
KPC
2294V-0
PRI
SEC.
PS2144
CN51
KLM-1856
CAUTION: TO PREVENT FIRE HAZARD REPLACE ONLY WITH SAME TYPE FUSE.
ATTENTION: REMPLACEZ UNIQUEMENT PAR UN FUSIBLE DE MEME TYPE.
250V 1A
250V T1A
KPC
2294V-0
PRI
SEC.
PS2144
CN51

KLM-1862

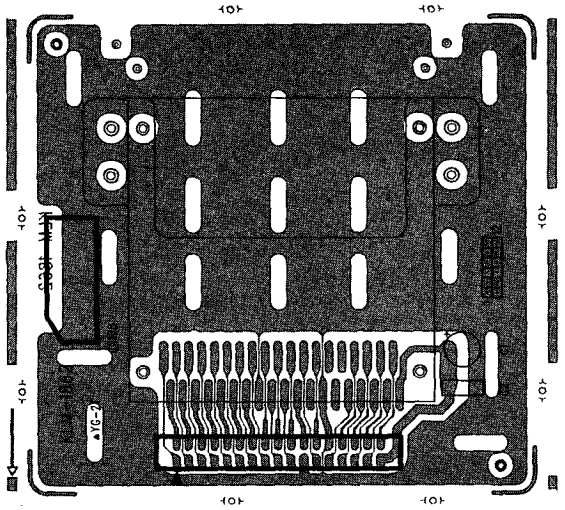

KLM-1871

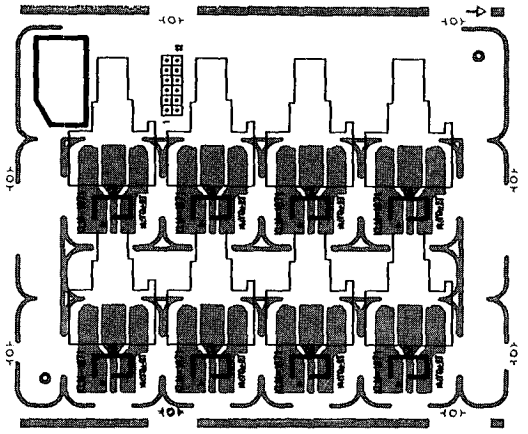

KLM-1863

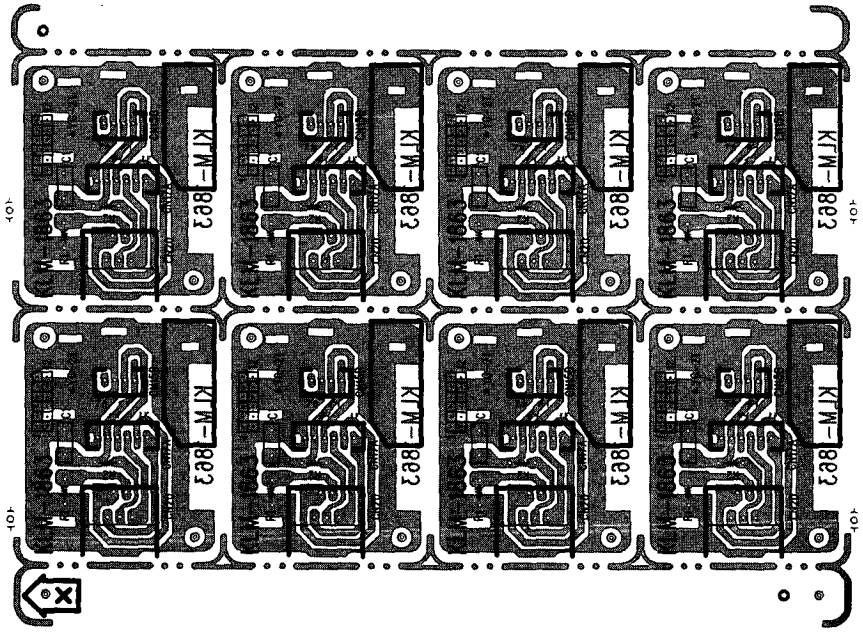

KLM-1879

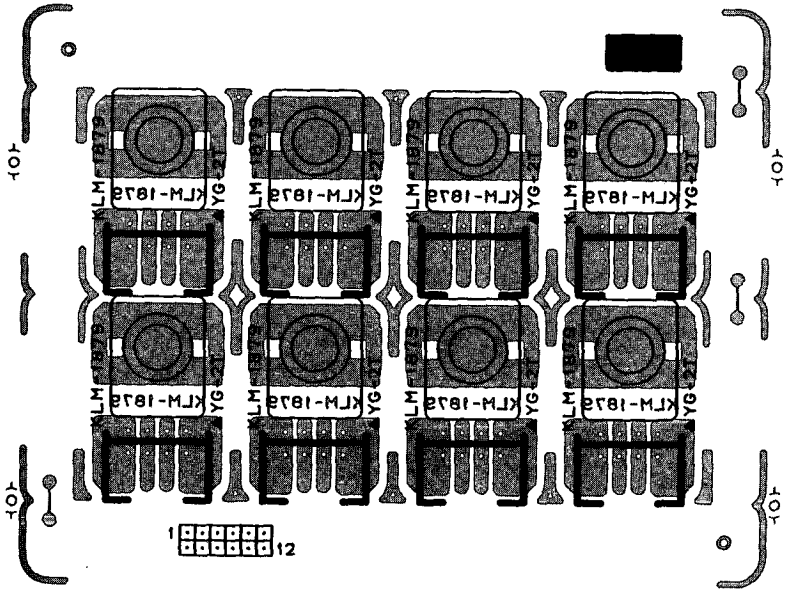

KLM-1864

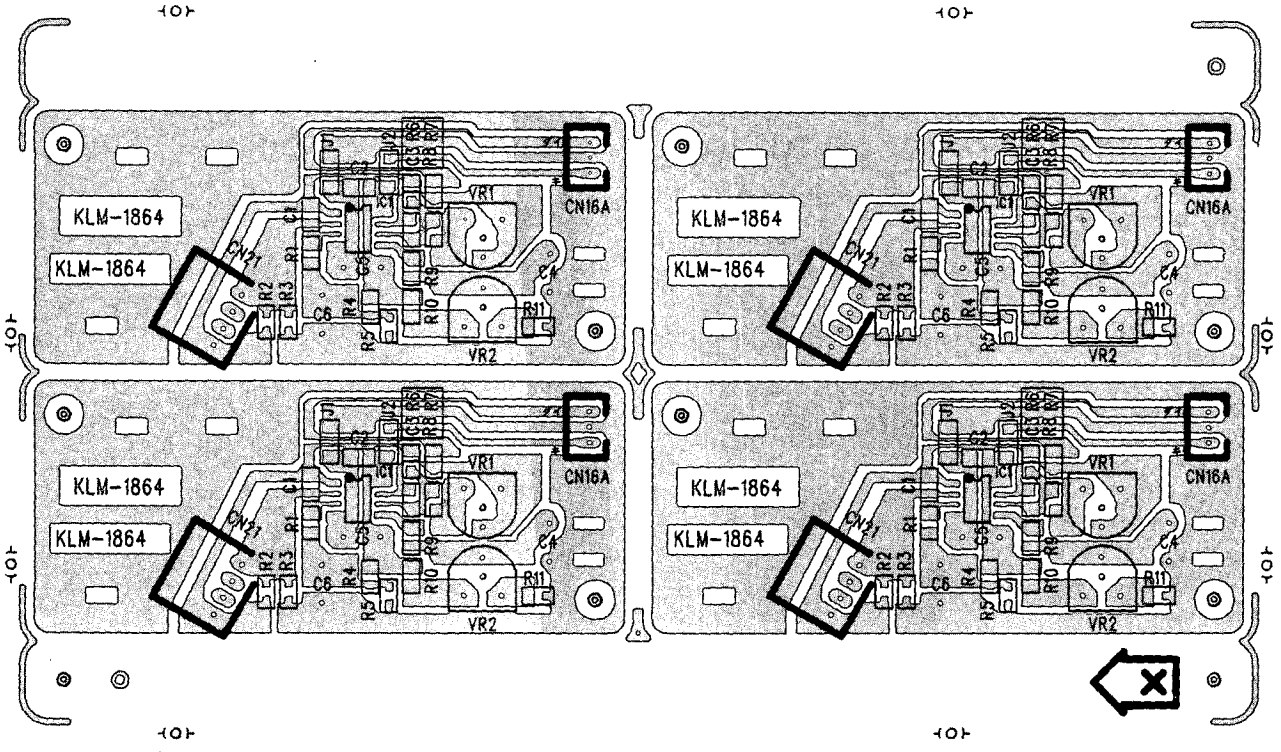

SOLDERING SIDE

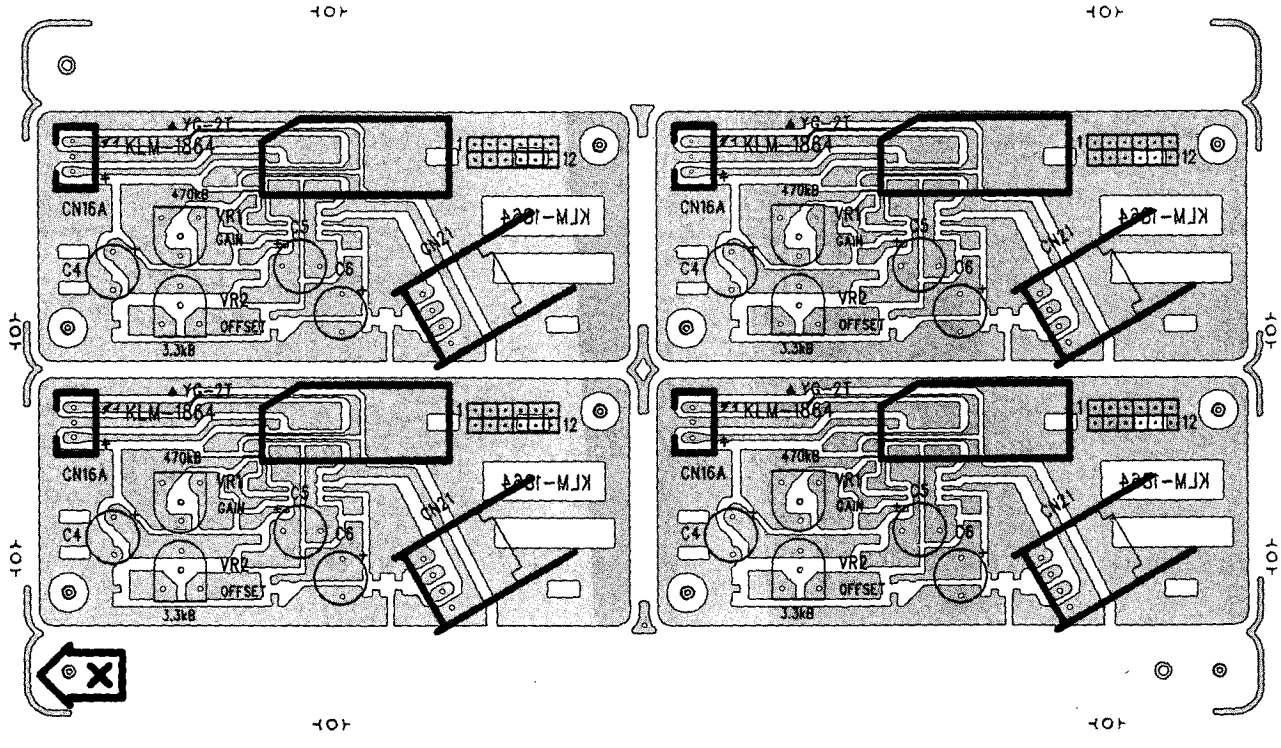

COMPONENT SIDE

KLM-1880

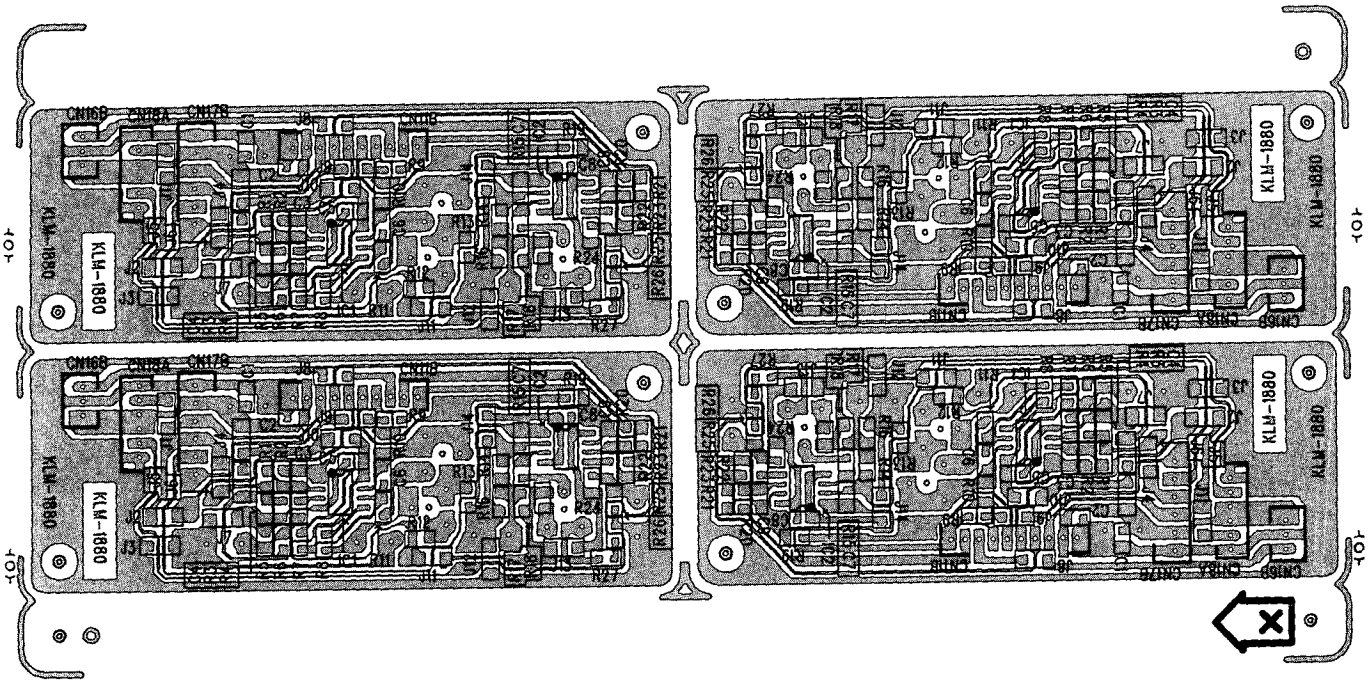

SOLDERING SIDE

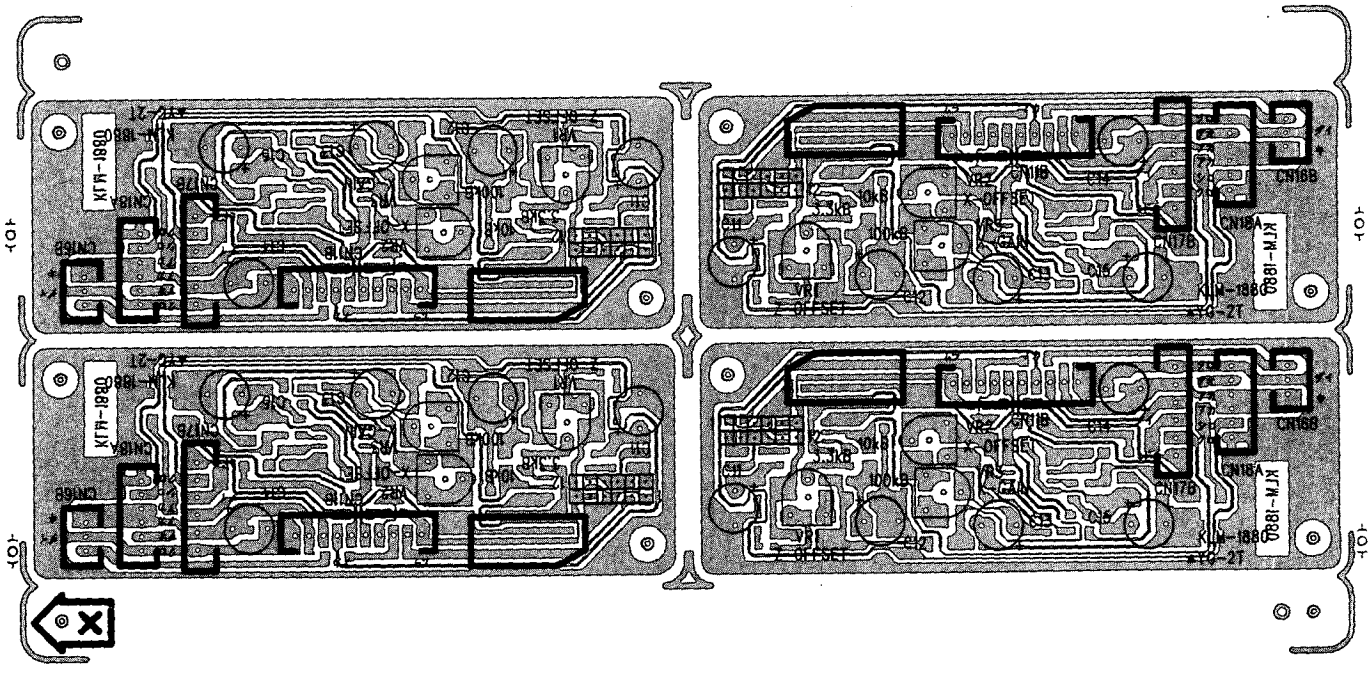

COMPONENT SIDE

7. TEST MODE

The SSP-1 has a test mode for checking numerous functions. When the test mode is activated, the SSP-1 internal data is initialized. Hence, if it contains any necessary data, save this data beforehand in a RAM card or a MIDI data filer or other memory device. The figure below shows the equipment and settings required for carrying out tests.

☆ **Standard Setting**

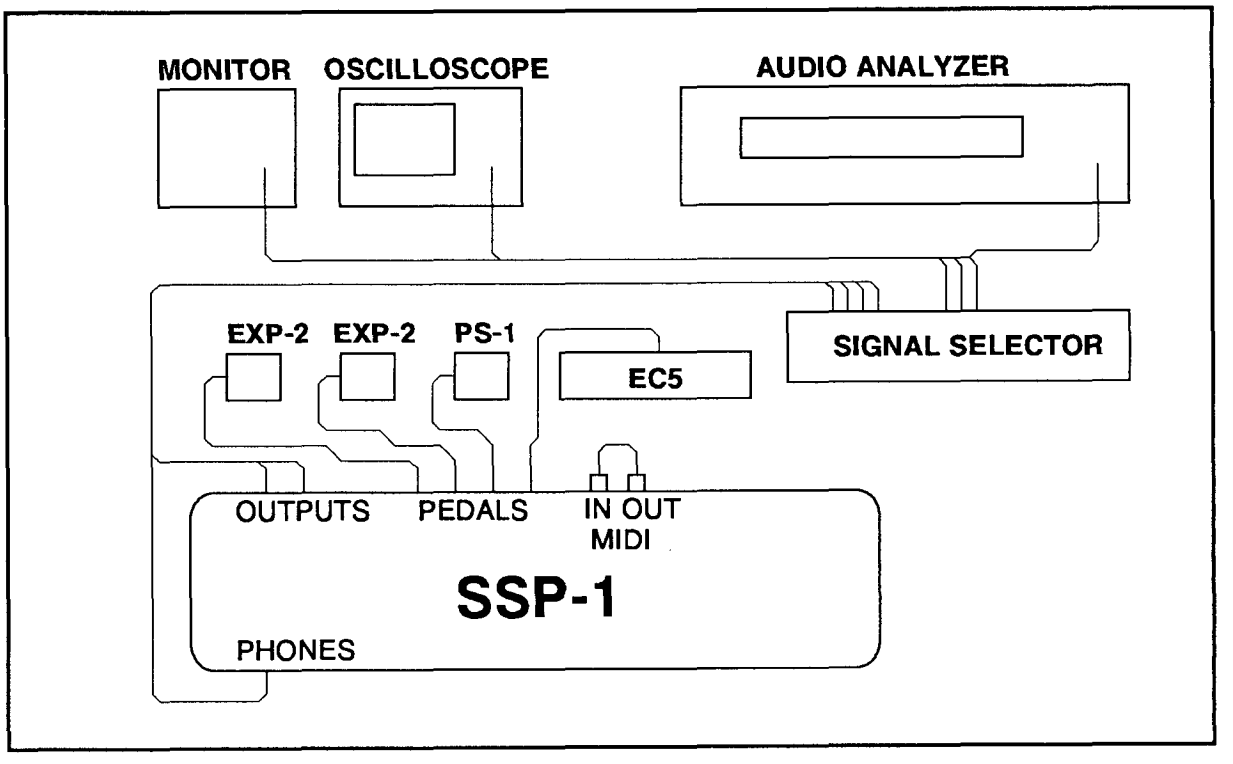

Oscilloscope : Time division 1ms/div
Voltage range 2V

★ Operating Specifications for Test Mode

※ Carry out RIBBON, WHEEL, and AFTERTOUCH calibration in the test mode. When you activate the test mode, always run all the tests. In addition, when an electronic part (such as volume, etc.) that falls on one of the above-mentioned is replaced, activate the test mode and carry out all the tests.

- Turning the power ON while pressing one of the following switches activates the test mode:

WHEEL 3 HOLD + PATTERN DEFINE	:	Ordinary test mode
WHEEL 3 HOLD + OCTAVE	:	Test mode excluding the MIDI and CARD test
WHEEL 3 HOLD + LATCH	:	Test mode excluding the MIDI test
WHEEL 3 HOLD + PORTAMENTO	:	Test mode excluding the CARD test

- When the test mode is activated, the opening screen is displayed for approx. 2 seconds:

Prophecy Test Mode System ROM:#XX

XX : ROM version number

- Switches to be used in test mode:

[PAT5] (or VALUE +)	:	Go to the next test step
[VALUE -]	:	Return to the preceding test step
[PAGE UP]	:	Go to the next test item
[PAGE DOWN]	:	Return to the preceding test item

- You can specify a test item directly by using the following switches:

[COMPARE]	LED&SW test
[(-)]	VR test
[0]	WHEEL test
[1]	RIBBON test
[2]	PEDAL test
[3]	LCD indication test
[4]	DSP test
[5]	Maximum output level test
[6]	Residual noise test
[7]	Keyboard test
[8]	Preload

※ *This test mode is compatible with ROM version #16 onward.*

☆Activating the Test Mode

- Make connections as described in SETUP section. Turn the power ON while pressing [WHEEL 3 HOLD] and [PATTERN DEFINE] switches.
  When the test mode is activated, internal tests follow automatically.

  - LCD screen at the Test Mode activation

```
Prophecy Test Mode   SystemROM:#XX
```

XX : ROM version number

  - Screen to be displayed upon normal completion of all the internal tests

```
1 LED&SW TEST
          LED(ALL)        BATTERY=n.nnV
```

n.nn : INTERNAL BATTERY voltage

☆Internal Tests

①MIDI test

- Connect IN and OUT of MIDI and check that the transmitted and received data are correct.

  If any abnormality is detected, the following indication appears to the LCD screen:

  - Error message for being unable to receive data

```
MIDI TEST
          TIME OUT ERROR
```

  - Error message for abnormal data received

```
MIDI TEST
          DATA ERROR
```

②CPU communication test

- Run the V55, H8 communication line test.

  If any abnormality is detected, the following indication appears to the LCD screen:

  - Error message for both H8 and V55 being unable to transmit/receive data

```
CPU CONNECTION TEST
          H8>>V55 CONNECTION ERROR
```

  - Error message for failing to receive data from H8

```
CPU CONNECTION TEST
          H8>>V55 TIME OUT ERROR
```

  - Error message for abnormal data received from V55

```
CPU CONNECTION TEST
          V55>>H8 DATA ERROR
```

· Error message for failing to receive data from V55

```
CPU CONNECTION TEST
        V55>>H8TIMEOUTERROR
```

③ROM checksum test

· Test each ROM connected to V55 and H8.

1) Run the checksum test of the ROM for V55.

If any abnormality is detected, the following indication appears to the LCD screen:

· Error message for abnormal ROM data for V55

```
ROM TEST
        V55 CHECK SUM ERROR
```

2) Run the checksum test of the ROM for H8.

If any abnormality is detected, the following indication appears to the LCD screen:

· Error message for abnormal ROM data for H8

```
ROM TEST
        V8 CHECK SUM ERROR
```

④SRAM write/read test

· Run the Write/Read test of the RAM each connected to V55 and H8.

1) Run the Write/Read test of the RAM for V55.

If any abnormality is detected, the following indication appears to the LCD screen:

· Error message for abnormal RAM data for V55

```
SRAM TEST
        V55 DATA ERROR
```

2) Run the Write/Read test of the RAM for H8.

If any abnormality is detected, the following indication appears to the LCD screen:

· Error message for abnormal RAM data for H8

```
SRAM TEST
        H8 DATA ERROR
```

⑤DSP initializing test

· Run the DSP initializing and DRAM tests.

1) Run the DSP1 initializing and DRAM tests.

If any abnormality is detected, the following indication appears to the LCD screen:

· Error message for abnormality in the DSP1 initialization and DRAM tests

```
DSP TEST
          DSP1 ERROR
```

2) Check the DSP2 initialization.

If any abnormality is detected, the following indication appears to the LCD screen:

· Error message for abnormality in the DSP2 initialization and DRAM checking

```
DSP TEST
          DSP2 ERROR
```

3) Check the DSP3 initialization and DRAM.

If any abnormality is detected, the following indication appears to the LCD screen:

· Error message for abnormality in the DSP3 initialization and DRAM checking

```
DSP TEST
          DSP3 ERROR
```

⑥LCD RAM write/read test

· Run the LCD RAM write/read tests.

If any abnormality is detected, the following indication appears to the LCD screen:

· Error message for abnormality in the LCD RAM checking

```
LCD RAM TEST
          DATA ERROR
```

⑦RAM CARD test

· Check the RAM CARD Write/Read and the battery terminal.

If any abnormality is detected, the following indication appears to the LCD screen:

· Error message for no insertion of the RAM card

```
CARD TEST
          NO CARD ERROR
```

· Error message for the insertion of the RAM card formatted with a different product

```
CARD TEST
          ILLEGAL CARD ERROR
```

· Error message for the RAM card WRITE PROTECT SW being turned ON

```
CARD TEST
          WRITE PROTECTED
```

· Error message for incorrect result of data Write/Read

```
CARD TEST
          WR/RD ERROR
```

· Error message for no battery in RAM card

```
CARD TEST
          NO BATTERY
```

⑧INTERNAL BATTERY test

· Check the internal battery.

If any abnormality is detected, the following indication appears to the LCD screen:

· Error message for the voltage being under 3.0 V

```
INTERNAL BATTERY TEST
          BATTERY LOW
```

· Error message for the voltage being over 3.6 V

```
INTERNAL BATTERY TEST
          BATTERY HI
```

☆External Tests

①LED&SW test

1) Check that all LEDs are lit.

```
1 LED&SW TEST
          LED(ALL)        BATTERY=n.nnV
```

When checked, press [PAT5] switch.

2) Run the switch and LED test in the sequence as indicated on the LCD screen. See Table 1 for the switches and the corresponding LEDs.

```
1 LED&SW TEST
          ARPEGGIO ON/OFF
```

switch name

If several switches are turned ON simultaneously, a switch name under checking and the bit data of a switch actually turned ON will be indicated.

```
1 LED&SW TEST
          nnnnnnnnnnnnnnn020000000000
```

switch name bit data

When all the SW tests are completed, proceed to the following test.

Table 1 List of switches and corresponding LEDs

No.	Switch name	LED	No.	Switch name	LED
1	ARPEGGIO ON/OFF	SW	24	A	SW
2	PATTERN DEFINE	SW	25	B	SW
3	OCTAVE	4	26	CARD	SW
4	OCTAVE	3	27	INT PAT	SW
5	OCTAVE	2	28	CARDPAT	SW
6	LATCH/KEY SYNC	LATCH&K.S.	29	PE1	SW
7	LATCH/KEY SYNC	KEYSYNC	30	PE2	SW
8	LATCH/KEY SYNC	LATCH	31	PE3	SW
9	WHEEL 3 HOLD	SW	32	PE4	SW
10	PORTAMENTO	SW	33	PE DEFINE	SW
11	OCTAVE DOWN	SW	34	COMPARE	SW
12	OCTAVEUP	SW	35	(PROG/PATSELECT)	
13	PAGE DOWN	SPEED	36	(PROG/PATSELECT)	(-)
14	PAGEUP		37	0	A
15	CURSOR<		38	1	B
16	CURSOR>		39	2	CARD
17	VALUE -		40	3	INT PAT
18	VALUE+		41	4	CARDPAT
19	ENTER	SW	42	5	PE1
20	EXIT		43	6	PE2
21	WRITE	SW	44	7	PE3
22	(PERFORM/EDIT)	(UPPER)	45	8	PE4
23	(PERFORM/EDIT)	(LOWER)	46	9	PE DEFINE

②VR test

- Check VR in the order of [SPEED], [1], [2], [3], [4] and [5].

Turn each VR, check the variation from 00 to 7FH, and move on to the following VR test.

- Indication of SPEED VR 1

```
2 VR TEST  SPEED1  2   3   4   5
           OK *7F  xx  xx  xx  xx
```

③WHEEL test

※ Make calibration of WHEEL in this test.
When the test mode is activated or VR of the WHEEL is replaced, always run this test.

1) Run the center test of WHEEL1.
Check that no error occurs when the center is shifted within the limit of its play.
If no error occurs, press "PAT5" SW to determine MIN and MAX values for the center and proceed to the following step.
Should you make an operation error, press VALUE again for re-checking.

2) Run the MIN and MAX checking of WHEEL1.
Move the WHEEL in the direction of MIN and MAX and check that OK appears.
When OK appears, press "PAT5" SW to determine MIN and MAX values and proceed to the following step.

3) Run the MIN and MAX checking of WHEEL2.
Move the WHEEL in the direction of MIN and MAX and check that OK appears.
When OK appears, press "PAT5" SW to determine MIN and MAX values and proceed to the following step.

4) Run the center check of WHEEL3.
Check that no error occurs when the center is shifted within the limit of its play.
If no error occurs, press "PAT5" SW to determine MIN and MAX values for the center and proceed to the following step.

5) Run the MIN and MAX checking of WHEEL3.
Move the WHEEL in the direction of MIN and MAX and check that OK appears.
When OK appears, press "PAT5" SW to determine MIN and MAX values and proceed to the following check item.

- Indication of the center being within a prescribed range as the result of WHEEL1 center check

3WHEELTEST	WHEEL1	WHEEL2	WHEEL3
	3F →←	xx	xx

- Indication of the center being outside a prescribed range as the result of WHEEL1 center check

3WHEELTEST	WHEEL1	WHEEL2	WHEEL3
	41Err	xx	xx

- Indication of the wheel being within a prescribed range as the result of WHEEL1 MIN, MAX check

3WHEELTEST	WHEEL1	WHEEL2	WHEEL3
	00 ←→	xx	xx

- Indication of the wheel being within a prescribed range as the result of WHEEL1 MIN, MAX check

3WHEELTEST	WHEEL1	WHEEL2	WHEEL3
	7F OK	xx	xx

④RIBBON test

※ Make calibration of RIBBON controller in this test.
When the test mode is activated or X-Z SENSOR is replaced, always run this test.

1) Check X axis of RIBBON.
Place your finger tip to the ribbon and move it to the left and right and check that OK appears.
Check that the bar graph in the LCD screen moves smoothly without being interrupted.
When you lift the finger, check that the bar is in the center area of the screen.

- Indication when the finger slides in the left hand direction

```
4 RIBBON-X TEST          X:7F        Z:xx
▯
```

- Indication when the finger slides in the right hand direction and passes the test

```
4 RIBBON-X TEST          X:00 OK     Z:xx
                                        ▯
```

- Indication when the finger is lifted from the ribbon

```
4 RIBBON-X TEST          X:xx OK     Z:xx
                    ▯
```

When OK appears, press "PAT5" SW to determine MIN and MAX values and proceed to the following step.

2) Check Z axis of RIBBON.
Fully turn RIBBON SENS on the rear panel clockwise as seen from behind.
Check that Z:OK appears and the bar graph moves smoothly when you press the left hand end of the ribbon.

3) Check that Z:7F appears when you move your finger from the left to right while pressing the ribbon.

4) Press the right hand end of the ribbon and check that X is under 03H.

5) Fully turn RIBBON SENS on the rear panel counterclockwise as seen from behind.
Press the right hand end of the ribbon with the finger and check that the movement of Z slows down (Z not becoming 7FH easily).

- Indication when the ribbon is not pressed with finger

```
4 RIBBON-Z TEST Z:00      (X:01)
▯
```

- Indication when the right hand end of the ribbon is pressed with finger

```
4 RIBBON-Z TEST Z:00      (X:01)
▯▯▯
```

⑤PEDAL test(EC5、FOOT SW、FOOT PEDAL)

Check EC5(A,B,C,D,E), FOOT SW, and FOOT PEDAL.
Check ON-OFF on all the pedals and see they are OK.

・Indication when FOOT PEDAL is OK

```
5 PEDAL  EC1 EC2 EC3 EC4 EC5 FSW FPDL
         OK  OK  OK  OK  OK  OK  7FOK
```

Upon completion of the checking, press "PAT5" SW and proceed to the following step.

⑥LCD indication test

1) All the dots on the LCD are indicated.
Check that no missing dots are present.

Upon completion of the checking, press "PAT5" SW and proceed to the following step.

2) Dots on the LCD are all erased.
Check that no residual dots are present.

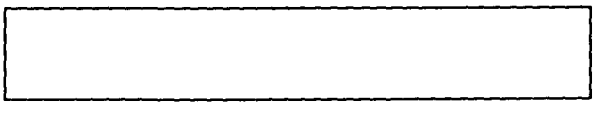

Upon completion of the checking, press "PAT5" SW and proceed to the following test item.

⑦DSP test

※ Measure the MASTER VOLUME in MAX state.
Measure it with the plug inserted to OUTPUT L,R, PHONES.

1) Check the DSP3(IC32) test waveform (Fig. 1) using an oscilloscope.
Output this waveform by oscillating DSP3.

```
7 DSP WAVEFORM TEST
[DSP3] DSP2 DSP1 DRAM3 DRAM1
```

2) Check the DSP2(IC36) test waveform (Fig. 2) using the oscilloscope.
Output this waveform through DSP3 by oscillating DSP2.

```
7 DSP WAVEFORM TEST
 DSP3 [DSP2] DSP1 DRAM3 DRAM1
```

3) Check the DSP1 (IC35) test waveform (Fig. 3) using the oscilloscope.
Output this waveform through DSP2 and DSP3 by oscillating DSP1.

```
7 DSP WAVEFORM TEST
 DSP3 DSP2 [DSP1] DRAM3  DRAM1
```

4) Check the DRAM3 (IC30, 31) test waveform (Fig. 4) using the oscilloscope.
This output waveform is oscillated using DSP1(IC35) and DRAM(IC33, 34) and effected by DSP3(IC32) and DRAM(30, 31).

Waveform should stabilize after several times of disturbance.
To check the waveform, observe it for 2 sec and over.

```
7 DSP WAVEFORM TEST
 DSP3 DSP2 DSP1 [DRAM3] DRAM1
```

5) Check the DRAM1 (IC33,34) test waveform (Fig. 5) using the oscilloscope.
This output waveform is oscillated using DSP1(IC35) and DRAM(IC33,34).

To check the waveform, observe it for 2 sec and over.

```
7 DSP WAVEFORM TEST
 DSP3 DSP2 DSP1 DRAM3 [DRAM1]
```

⑧Maximum output level test

※ Measure the MASTER VOLUME in MAX state.
Measure it with the plug inserted to OUTPUT L,R, and PHONES. Apply a load of 33 ohms to the phones for measurement.
Audio analyzer: LPF=80kHz ON

```
8 MAX LEVEL TEST
[L]   R  PHL PHR
```

[ ] represents a selected output.

- Measure the MAX level of OUTPUT L.
- Check that the output signal level and frequency are within the prescribed ranges in the table below.
- Observe sine waves only (Fig. 6).
- Press [PAT5] to check OUTPUT L, PHONE L, and PHONE R same way.

Prescribed range of output level

outputs	signal level	freq.
OUTPUTL	8.0~9.5dBu	488Hz
OUTPUTR	8.0~9.5dBu	412Hz
PHONE L	5.5~7.0dBu	735Hz
PHONER	5.5~7.0dBu	610Hz

⑨Residual noise test

※ Measure the MASTER VOLUME in MAX state.
Measure it with the plug inserted to OUTPUT L,R, and PHONES.
Apply a load of 33 ohms to the phones for measurement.
Audio analyzer: LPF=20kHz, PSOPHO=A

```
9 NOISE TEST
[ L ]   R   PHL  PHR
```

[ ] represents a selected output.

- Check that the output signal level is within the prescribed range in the table below.
- Press [PAT5] to check OUTPUT L, PHONE L, and PHONE R same way.

Prescribed ranges of residual noise level

outputs	signal level
OUTPUTL	less than -93.0dBu
OUTPUTR	less than -93.0dBu
PHONEL	less than -94.0dBu
PHONER	less than -94.0dBu

⑩Keyboard test

※ Make calibration of the after-touch in this test.
Always run this test when the test mode is activated or an after-touch sensor is replaced.

1) Press all the keys from C6 to C3 sequentially to check velocity.
If the velocity is between 2B4 and 49H, proceed to the testing of the following key.

- Indication of a correctly pressed key

```
10 KEYBOARD TEST
   KEY = C6  VERO = 40
```

- Indication of multiple keys turned ON simultaneously

```
10 KEYBOARD TEST          MK:0801000000
   KEY=B5      VERO=3E    BK:0801000000
```

- Indication of a key whose velocity is outside a prescribed range or when any wrong key is pressed

```
10 KEYBOARD TEST
   KEY =      VERO=          Err:A5  08
```

Upon completing the pressing of all the keys, proceed to the AFTERTOUCH test.

2) Press C3 and C6 and check that AFTERTOUCH is effective and the value is indicated between 00 to 7FH.

· LCD indication for a maximum after-touch value

· LCD indication when AFTERTOUCH is not effective

Upon completion of the checking, press "PAT5" SW to determine MIN and MAX values and proceed to the following test item.

⑪Preload

Press "PAT5" SW to effect preloading.

Upon completion of preload, check the data and end the test.

☆ **Supplement**

1. Aftertouch Calibration

※ After finishing the test mode, execute this caribration by all means.

① After comfirming the preload, press [PERFORM/EDIT] to enter the edit mode.
([PERFORM/EDIT] is located at the right side of [WRITE].)
The lower part of LEDs, which are located at the upper side of [PERFORM/EDIT] go on and off.
② Press [GLOBAL] to light up GLOBAL LED.
③ Press [PAGE LEFT] so that the LCD indicates the following.

```
◀GLB-22[Controller Calibration]
 WHEEL1  L←    *    →H <Min&Max OK?>
```

④ Press [VALUE+] five times so that the LCD indicates the following.

```
◀GLB-22[Controller Calibration]
AftTouch   L←*        →H <Min&Max OK?>
```

⑤ The indication ' * ' at 'AftTouch L←* →H' in the LCD should be three or four pieces.
To get this result, press any key properly.
The excess press might cause more than 5 pcs. of the indication ' * '.
In this case press [EXIT] and start again.

```
◀GLB-22[Controller Calibration]
AftTouch   L← ***     →H <Min&Max OK?>
```

⑥ After finishing the adjustment, press [ENTER].
The LCD indicates the following.

```
◀GLB-22[Controller Calibration]
AftTouch   L← ***     →H <Are you sure?>
```

When the excess press causes more than 5 pcs. of the indication ' * ',
press [EXIT] and execute ⑤ again.
If it is OK, press [ENTER].
The LCD indicates the following.

```
◀GLB-22[Controller Calibration]
AftTouch   L← ***     →H <Completed >
```

⑦ Press [PERFORM/EDIT] and select 'A03:Trumpet1 →Wh1'.
Press any key and comfirm that the aftertouch functions properly.

☆Test Waveforms

※OSCILLOSCOPE
1V/DIV
1ms/DIV

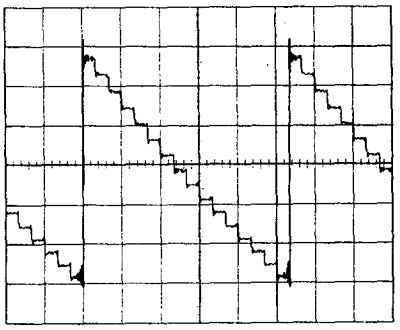

FIGURE 1

※OSCILLOSCOPE
1V/DIV
1ms/DIV

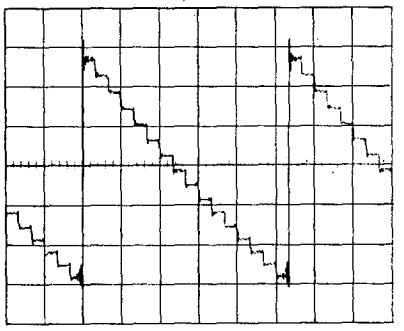

FIGURE 2

※OSCILLOSCOPE
1V/DIV
1ms/DIV

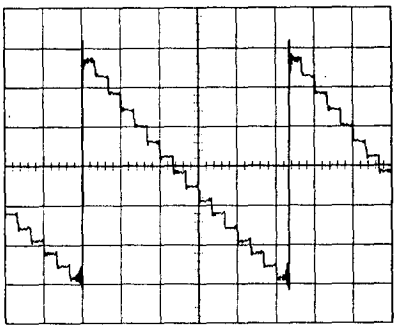

FIGURE 3

※OSCILLOSCOPE
1V/DIV
0.5ms/DIV

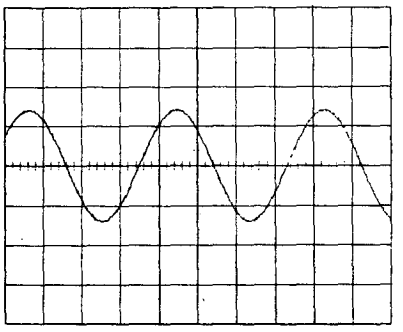

FIGURE 4

※OSCILLOSCOPE
1V/DIV
0.5ms/DIV

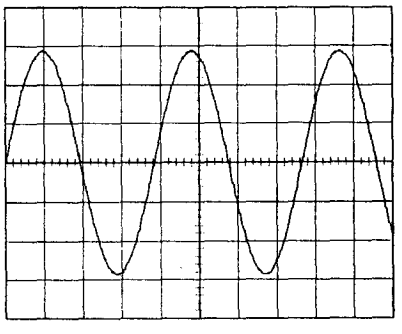

FIGURE 5

※OSCILLOSCOPE
1V/DIV
0.5ms/DIV

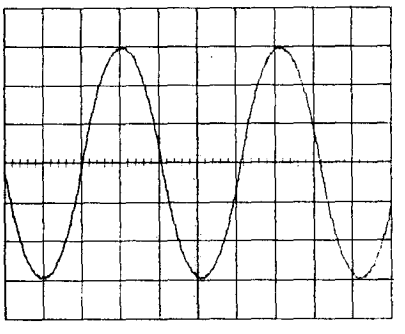

FIGURE 6

8. REFERENCE DATA

MAIN ICs

MPU :	UPD70433(V55PI) for SYSTEM CONTROL	IC4
SUB CPU :	HD6413003RF116(H8/3003) for DSP CONTROL	IC28
DSP :	TMS57002BPH	IC32, IC35, IC36
	IC35 is DSP1 for Oscillator section	
	IC36 is DSP2 for Filter section	
	IC32 is DSP3 for Effect section	
CARD BUFFER :	UPD65612-015-3BE (CBR92)	IC5
SYSTEM ROM :	UPD27C4096-12 for V55 (4M EPROM)	IC12
	UPD27C1024 for H8/3003 (1M EPROM)	IC22
SRAM :	UPD431000 (1M SRAM)	IC9, IC10, IC23
	IC9 and IC10 are used for SYSTEM (backuped)	
	IC23 is used for DSP (non backuped)	
DRAM :	LH6456K3 (256Kx4 DRAM)	IC30, IC31, IC33, IC34
	IC30 and IC31 are used for Effect	
	IC33 and IC34 are used for Oscillator	
DAC :	TDA1305T	IC15

uPD70433(V55) Pin Assignment

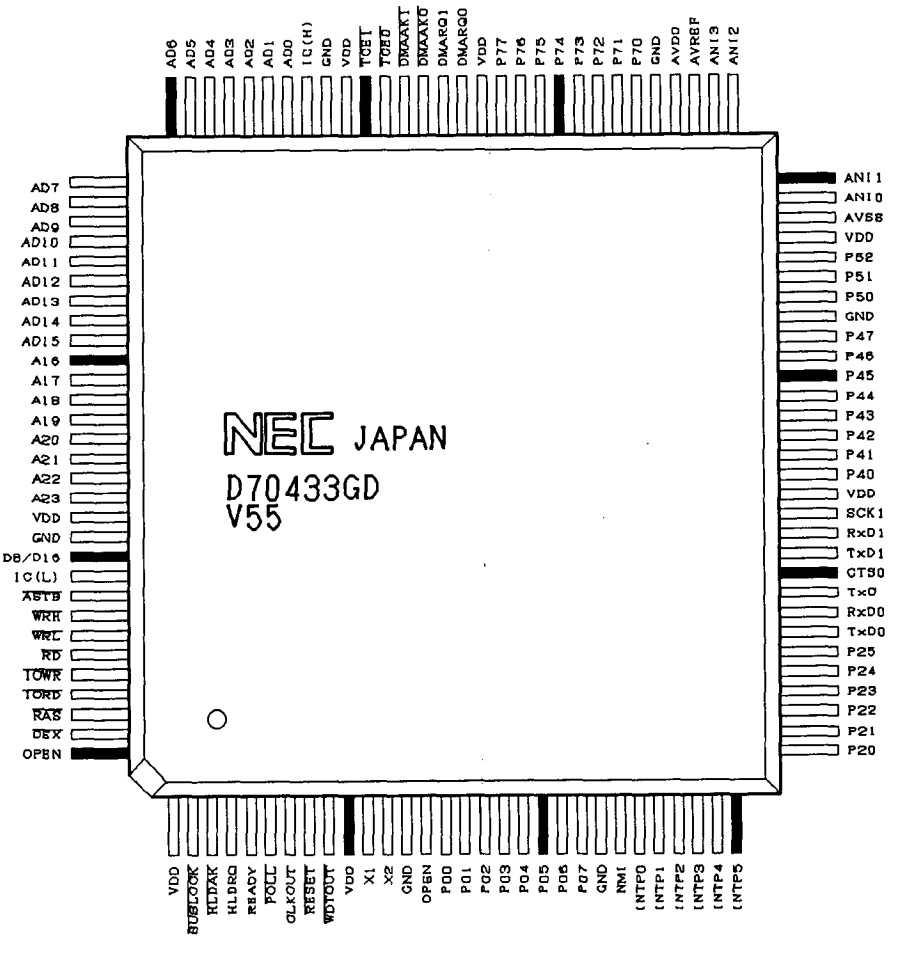

uPD70433(V55) Pin Functions

PIN#	PIN NAME (*=Low Active)	FUNCTION	etc..	PIN#	PIN NAME (*=Low Active)	FUNCTION	etc..
1	:VDD	:+5V	:	61	:ANI2	:A/D 2	:
2	:*BUSLOCK	:N.C.	:	62	:ANI3	:A/D 3	:
3	:*HLDAK	:N.C.	:	63	:AVREF	:(Hi)	:VDD
4	:HLDRQ	:(Low)	:P.D.	64	:AVDD	:+5V	:
5	:READY	:(Hi)	:VDD	65	:GND	:GND	:
6	:*POLL	:(Low)	:P.D.	66	:P70	:LCD-DB0	:
7	:CLKOUT	:N.C.	:	67	:P71	:LCD-DB1	:
8	:*RESET	:SYSRES	:	68	:P72	:LCD-DB2	:
9	:*WDTOUT	:N.C.	:	69	:P73	:LCD-DB3	:
10	:VDD	:+5V	:	70	:P74	:LCD-DB4	:
11	:X1	:CLOCKIN	:	71	:P75	:LCD-DB5	:
12	:X2	:CLOCKOUT	:	72	:P76	:LCD-DB6	:
13	:GND	:GND	:	73	:P77	:LCD-DB7	:
14	:OPEN	:N.C.	:	74	:VDD	:+5V	:
15	:P00	:IC3-A	:	75	:P80	:IC1,11-A	:
16	:P01	:IC3-B	:	76	:P81	:IC1,11-B	:
17	:P02	:IC3-C	:	77	:*DMAAK0	:N.C.	:
18	:P03	:IC3-G1	:	78	:*DMAAK1	:N.C.	:
19	:PO4	:WPT	:	79	:*TCE0	:N.C.	:
20	:P05	:CDDT	:	80	:*TCE1	:N.C.	:
21	:P06	:ALM	:	81	:VDD	:+5V	:
22	:P07	:P-SW	:	82	:GND	:GND	:
23	:GND	:GND	:	83	:IC(H)	:(Hi)	:P.U.
24	:NMI	:(Low)	:GND	84	:AD0	:AD00	:
25	:P11	:(Hi)	:P.U.	85	:AD1	:AD01	:
26	:P12	:EC5E	:	86	:AD2	:AD02	:
27	:P13	:EC5D	:	87	:AD3	:AD03	:
28	:P14	:EC5C	:	88	:AD4	:AD04	:
29	:P15	:EC5B	:	89	:AD5	:AD05	:
30	:P16	:EC5A	:	90	:AD6	:AD06	:
31	:P20	:SD	:for LED driver	91	:AD7	:AD07	:
32	:P21	:SCK	:for LED driver	92	:AD8	:AD08	:
33	:P22	:LE1	:for LED driver	93	:AD9	:AD09	:
34	:P23	:LE2	:for LED driver	94	:AD10	:AD10	:
35	:P24	:TEMPO	:	95	:AD11	:AD11	:
36	:P25	:ENTER	:	96	:AD12	:AD12	:
37	:TxD0	:VHSD	:	97	:AD13	:AD13	:
38	:RxD0	:HVSD	:	98	:AD14	:AD14	:
39	:TxD1	:VHSCK	:	99	:AD15	:AD15	:
40	:P33	:INT	:	100	:A16	:VA16	:
41	:TxD1	:MIDI OUT	:	101	:A17	:VA17	:
42	:RxD1	:MIDI IN	:	102	:A18	:VA18	:
43	:P36	:H8-RES	:	103	:A19	:VA19	:
44	:VDD	:+5V	:	104	:A20	:N.C.	:
45	:P40	:T0	:	105	:A21	:N.C.	:
46	:P41	:T1	:	106	:A22	:N.C.	:
47	:P42	:T2	:	107	:A23	:N.C.	:
48	:P43	:T3	:	108	:VDD	:+5V	:
49	:P44	:T4	:	109	:GND	:GND	:
50	:P45	:T5	:	110	:D8/*D16	:(Low)	:GND
51	:P46	:T6	:	111	:IC(L)	:(Low)	:P.D.
52	:P47	:T7	:	112	:*ASTB	:ASTB	:
53	:GND	:GND	:	113	:*WRH	:WRH	:
54	:P50	:LCD-R/W	:	114	:*WRL	:WRL	:
55	:P51	:LCD-RS	:	115	:*RD	:RD	:
56	:P52	:LCD-E	:	116	:*IOWR	:N.C.	:
57	:VDD	:+5V	:	117	:*IORD	:N.C.	:
58	:AVSS	:GND	:	118	:*RAS	:N.C.	:
59	:ANI0	:A/D 0	:	119	:*DEX	:N.C.	:
60	:ANI1	:A/D 1	:	120	:OPEN	:N.C.	:

HD6413003RF16(H8/3003) Pin Assignment

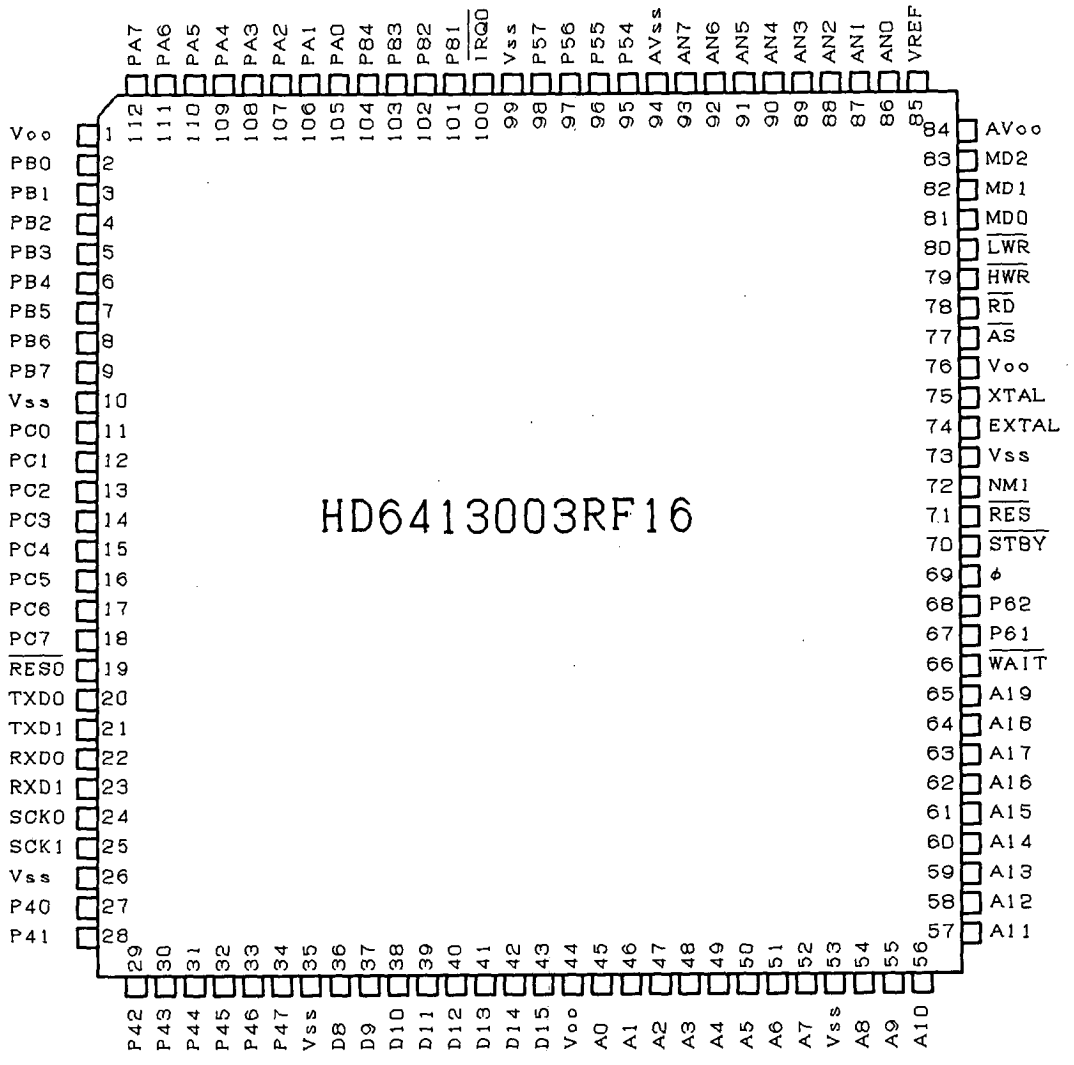

HD6413003RF16(H8/3003) Pin Functions

PIN#	PIN NAME (*=Low Active)	FUNCTION	etc..	PIN#	PIN NAME (*=Low Active)	FUNCTION	etc..
1	:VCC	:+5V	:	57	:A11	:A11	:
2	:PB0	:EMP1	:	58	:A12	:A12	:
3	:PB1	:EMP2	:	59	:A13	:A13	:
4	:PB2	:EMP3	:	60	:A14	:A14	:
5	:PB3	:N.C.	:	61	:A15	:A15	:
6	:PB4	:N.C.	:	62	:A16	:A16	:
7	:PB5	:N.C.	:	63	:A17	:A17	:
8	:PB6	:N.C.	:	64	:A18	:A18	:
9	:PB7	:N.C.	:	65	:A19	:A19	:
10	:VSS	:GND	:	66	:*WAIT	:(Hi)	:VCC
11	:PC0	:N.C.	:	67	:P61	:N.C.	:
12	:PC1	:N.C.	:	68	:P62	:N.C.	:
13	:PC2	:N.C.	:	69	:CKO	:N.C.	:
14	:PC3	:N.C.	:	70	:*STBY	:(Hi)	:VCC
15	:PC4	:IC26-1G	:	71	:*RES	:H8-RES	:
16	:PC5	:N.C.	:	72	:NMI	:(Hi)	:VCC
17	:PC6	:A-MUTE	:	73	:VSS	:GND	:
18	:PC7	:DSP-MUTE	:	74	:EXTAL	:512FS	:CLOCK
19	:*RESO	:N.C.	:	75	:XTAL	:N.C.	:
20	:TxD0	:HVSD	:	76	:VCC	:+5V	:
21	:TxD1	:N.C.	:	77	:*AS	:N.C.	:
22	:RxD0	:VHSD	:	78	:*RD	:H-RD	:
23	:RxD1	:(Low)	:P.D.	79	:*HWR	:HWR	:
24	:SCK0	:VHSCK	:	80	:*LWR	:N.C.	:
25	:SCK1	:(Low)	:P.D.	81	:MD0	:(Low)	:MODE SELECT
26	:VSS	:GND	:	82	:MD1	:(Hi)	:MODE SELECT
27	:D0	:D00	:	83	:MD2	:(Low)	:MODE SELECT
28	:D1	:D01	:	84	:AVCC	:+5V	:
29	:D2	:D02	:	85	:Vref	:+5V	:
30	:D3	:D03	:	86	:AN0	:(Hi)	:P.U.(A/D PORT)
31	:D4	:D04	:	87	:AN1	:(Hi)	:P.U.(A/D PORT)
32	:D5	:D05	:	88	:AN2	:(Hi)	:P.U.(A/D PORT)
33	:D6	:D06	:	89	:AN3	:(Hi)	:P.U.(A/D PORT)
34	:D7	:D07	:	90	:AN4	:(Hi)	:P.U.(A/D PORT)
35	:VSS	:GND	:	91	:AN5	:(Hi)	:P.U.(A/D PORT)
36	:D8	:D08	:	92	:AN6	:(Hi)	:P.U.(A/D PORT)
37	:D9	:D09	:	93	:AN7	:(Hi)	:P.U.(A/D PORT)
38	:D10	:D10	:	94	:AVSS	:	:GND
39	:D11	:D11	:	95	:P54	:N.C.	:
40	:D12	:D12	:	96	:P55	:N.C.	:
41	:D13	:D13	:	97	:P56	:N.C.	:
42	:D14	:D14	:	98	:P57	:N.C.	:
43	:D15	:D15	:	99	:VSS	:GND	:
44	:VCC	:+5V	:	100	:*IRQ0	:(Hi)	:VCC
45	:A0	:A00	:	101	:P81	:INT	:
46	:A1	:A01	:	102	:P82	:(Low)	:
47	:A2	:A02	:	103	:P83	:(Low)	:
48	:A3	:A03	:	104	:P84	:(Low)	:
49	:A4	:A04	:	105	:PA0	:CTL0	:
50	:A5	:A05	:	106	:PA1	:CTL1	:
51	:A6	:A06	:	107	:PA2	:CTL2	:
52	:A7	:A07	:	108	:PA3	:CTL3	:
53	:VSS	:GND	:	109	:PA4	:CTL4	:
54	:A8	:A08	:	110	:PA5	:N.C.	:
55	:A9	:A09	:	111	:PA6	:N.C.	:
56	:A10	:A10	:	112	:PA7	:N.C.	:

TMS57002(DSP) PIN ASSIGNMENT

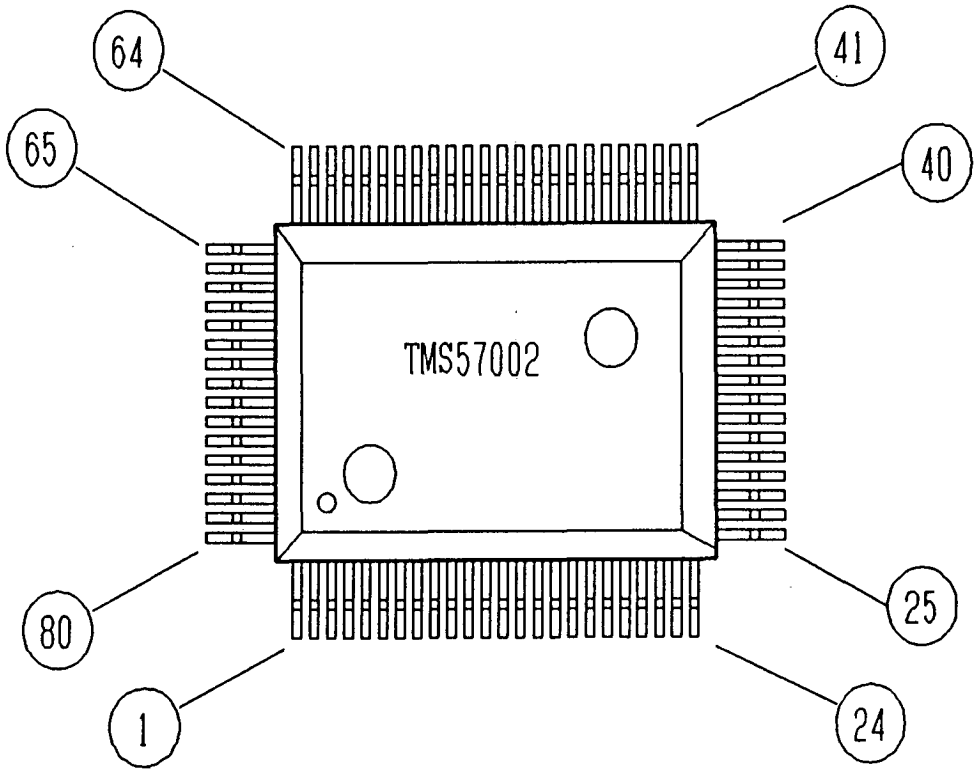

TMS57002(DSP) PIN FUNCTIONS

PIN NAME	I/O	FUNCTION
VCC1, VCC2	---	+5V supply pins
VSS1, VSS2	---	Ground pins
CLKIN	I	System clock input
SYNC	I	System synchronization signal
SYPOL	I	Polarity selct of SYNC active edge
SI0, SI1	I	S-port data receive input pins
SO0, SO1	O	S-port data transmit output pins
BCKI	I	Bit clock for Input S-ports
BCKO	I	Bit clock for Output S-ports
LRCKI	I	L/R channel indication signal for Input S-ports
LRCKO	I	L/R channel indication signal for Output S-ports
D(7-0)	I/O	8bit data input and output of P-port
STRB	I	Data Strobe input for P-port
WR	I	Write control signal input for P-port
EMPTY	O	Indicate P-port input buffer empty condition
CS	I	Chip select for P-port enable
PLOAD	I	Program data load control signal for P-port
CLOAD	I	Coefficient data background update request
BIO	I	Branch control signal
MUTE	I	Mute serial port signal
OVFM	O	Overflow detect signal on multiplier accumulator
OVFA	O	Overflow detect signal on ALU accumulator
RS	I	Hardware reset signal
PCO	O	Output Program Counter 0 state for sync clock
CLKSEL	I	Select signal of clock rate
TEST (0-4)	I	Device test control signals
RES	---	Reserved for future external DRAM interface

uPD65612-015-3BE (CBR92) PIN ASSIGNMENT

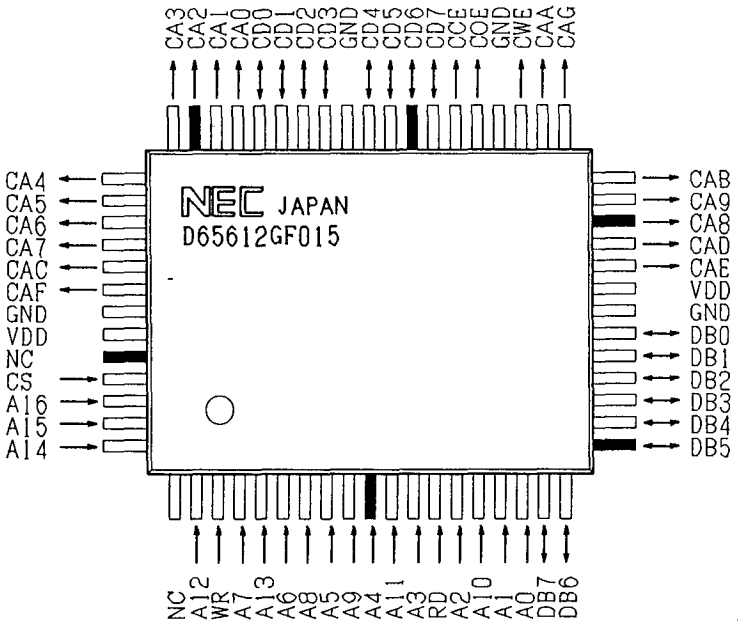

uPD65612-015-3BE (CBR92) PIN FUNCTIONS

PIN NAME	I/O	FUNCTION
A16-0	I	ADDRESS INPUT
CS	I	CHIP SELECT INPUT
RD	I	READ STROBE INPUT
WR	I	WRITE STROBE INPUT
CCE	O	CARD CHIP SELECT OUTPUT
COE	O	CARD OUTPUT ENABLE
CAF-0(CA16-0)	O	CARD ADDRESS OUTPUT
DB7-0	I/O	CPU DATA BUS
CD7-0	I/O	CARD DATA BUS

uPD65612-015-3BE(CBR92) TIMMING CHART

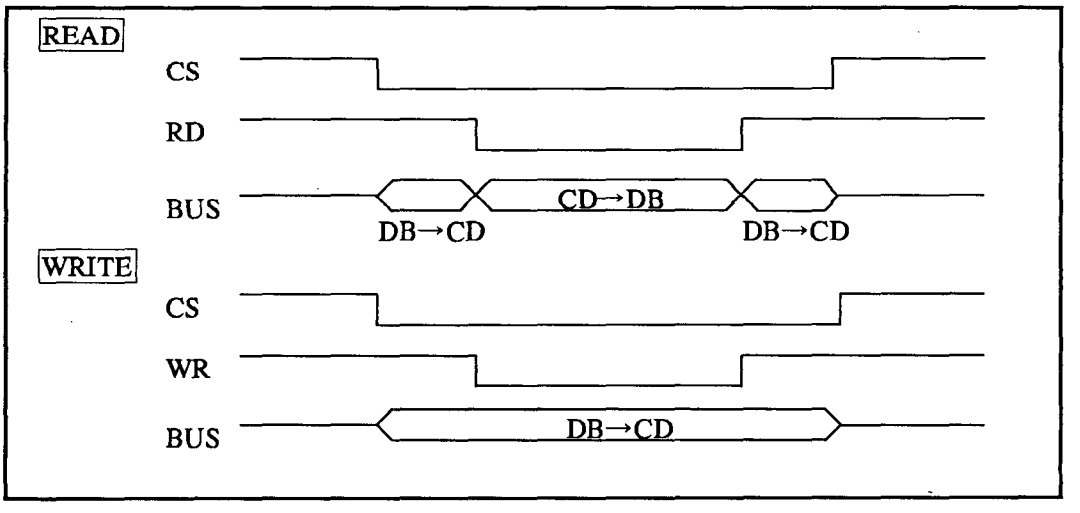

TDA1305T(DAC) PIN FUNCTIONS

SYMBOL	PIN	FUNCTION
VDDA	1	analog supply voltage
VSSA	2	analog ground
TEST1	3	test input; pin should be connected to ground (internal pull-down resistor)
BCK	4	bit clock input
WS	5	word select input
DATA	6	data input
CLKS1	7	clock selection 1 input
CLKS2	8	clock selection 2 input
VSSD	9	digital ground
VDDD	10	digital supply voltage
TEST2	11	test input; pin should be connected to ground (internal pull-down resistor)
SYSCLKI	12	system clock input
n.c.	13	not connected (this pin should be left open-circuit)
n.c.	14	not connected (this pin should be left open-circuit)
VSSD	15	digital ground
SYSCLKO	16	system clock output
DEEM1	17	de-emphasis on/off; fDEEM 32kHz, 44kHz and 48kHz
DEEM2	18	de-emphasis on/off; fDEEM 32kHz, 44kHz and 48kHz
MUSB	19	mute input (active LOW)
DSMB	20	double-speed mode input (active LOW)
ATSB	21	12 dB attenuation input (active LOW)
VOL	22	left channel output
FILTCL	23	capacitor for left channel 1st order filter function should be connected between pins 22 and 23
FILTCR	23	capacitor for right channel 1st order filter function should be connected between pins 25 and 24
VOR	25	right channel output
VREF	26	internal reference voltage for output channels (0.5VDD)
VSSO	27	operational amplifier ground
VDDO	28	operational amplifier supply voltage

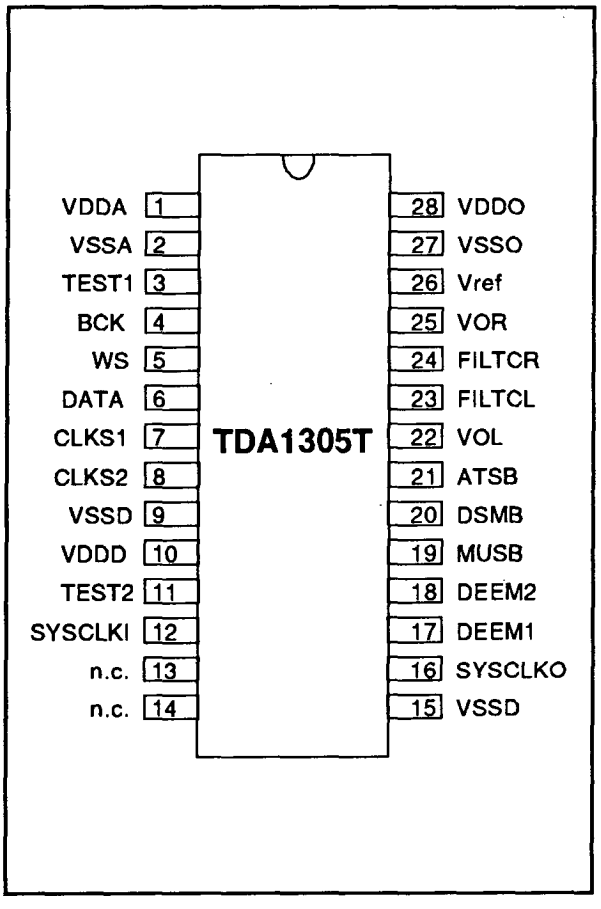

CHECK POINTS

1. CLOCK CIRCUIT - MPU(V55PI)

From X1
To 11pin(X1) and 12pin(X2) of IC4

f=32.00MHz

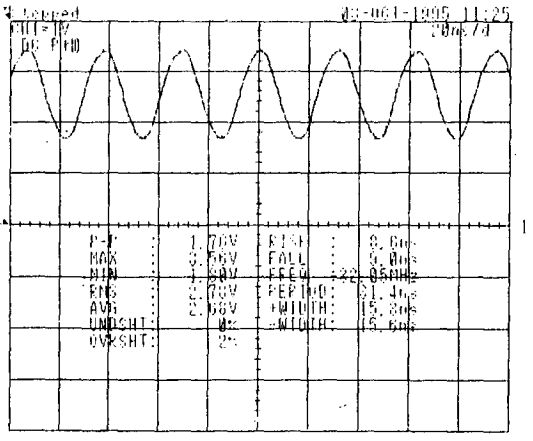

2. CLOCK CIRCUIT - CPU(H8/3003)/DSPs
- CLOCK GENERATOR

From 2pin of IC29
To 74pin(EXTAL) of IC28,
10pin(CLOCK) of IC27,
11pin(CLKIN) of IC32, 35, 36

f=24.576MHz

signal name : 512FS

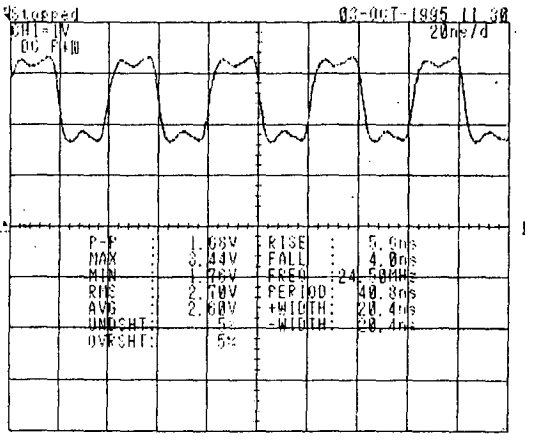

3. CLOCK GENERATOR - DAC

From 9pin(Q1) of IC27
To 6pin(SYSCLK) of IC15

f=12.34MHz

signal name : 256FS

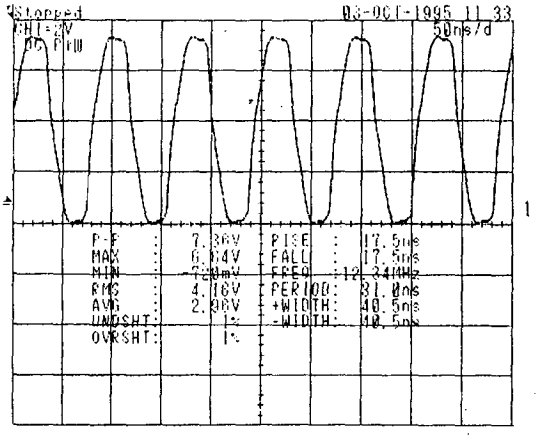

4. CLOCK GENERATOR - DSPs

From 6pin(Q3) of IC27
To 2pin(BCKO) and 75pin(BCKI)
of IC32, IC35 and IC36

f=3.06MHz

signal name : 64FS

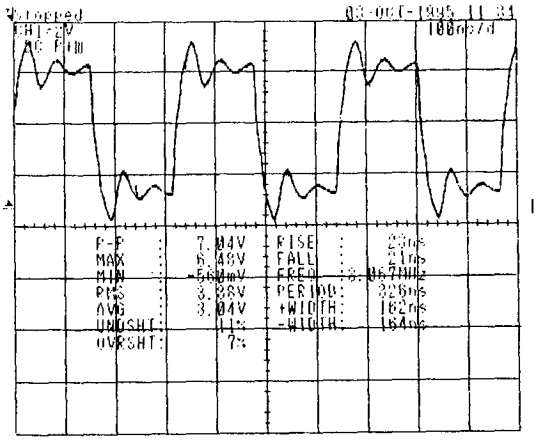

5. CLOCK GENERATOR - DSPs

From 12pin(Q9) of IC27
To 80pin(SYNC) of IC32, 35 and 36

f=48.00KHz

signal name : FS

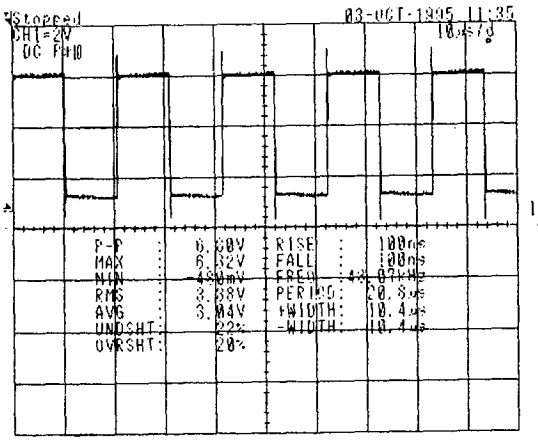

6. BIT CLOCK GENERATOR - DAC

From 8pin(Q) of IC24
To 5pin(LRCK) of IC15

f=48.00KHz

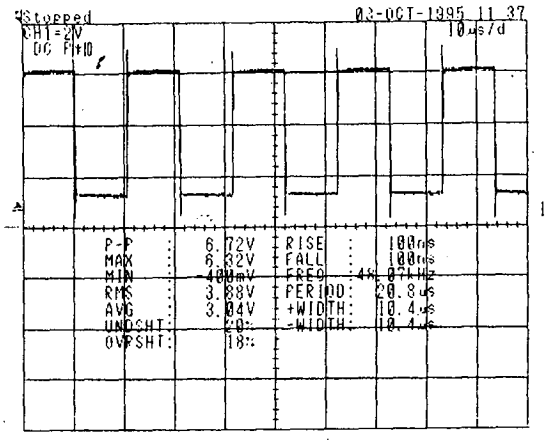

7. RESET CIRCUIT - MPU/SRAMs

From 7pin(RES) of IC21
To 8pin(RESET) of IC4
and 30pin(CE2) of IC9, IC10

※ When turn the power on

1ch : +5V power supply
2ch : RESET

signal name : SYSRES

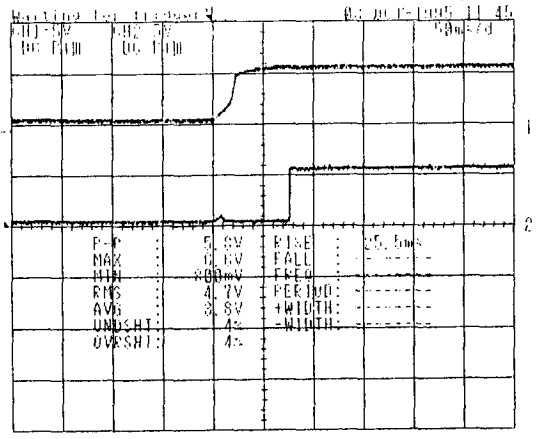

8. MPU(V55PI) - CPU(H8/3003)

From 43pin(SCK1) of IC4
To 71pin(RES) of IC28

※ When turn the power on

1ch : +5V power supply
2ch : RESET

signal name : H8RES

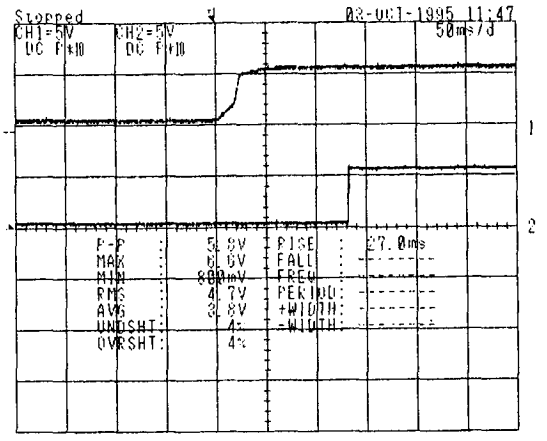

9. DSP3 - DAC

From 6pin(SO0) of IC32
To 6pin(DATA) of IC15

※ When DSP3 waveform test

1ch : L/R clock
2ch : Serial data

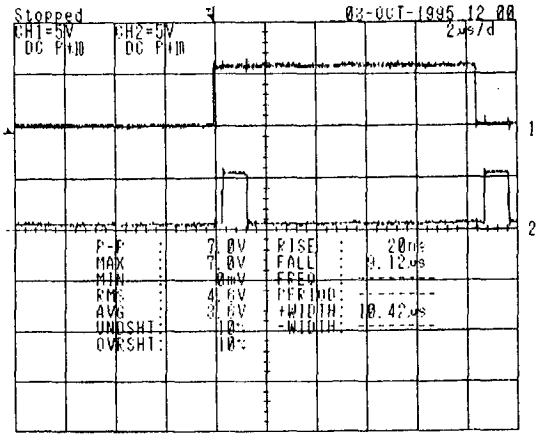

10. DSP2 - DSP3

From 6pin(SO0) of IC36
To 78pin(SI0) of IC32

※ When DSP2 waveform test

1ch : L/R clock
2ch : serial data

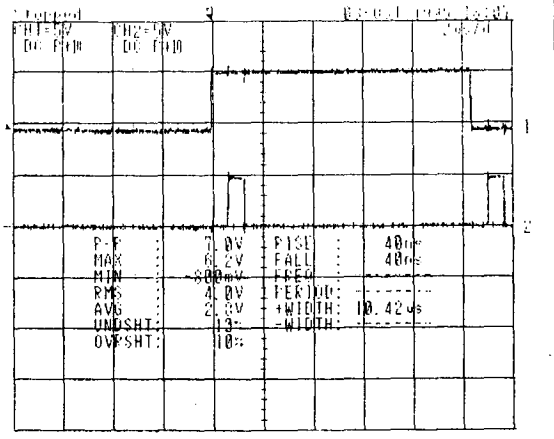

11. DSP1 - DSP3

From 6pin(SO0) of IC35
To 78pin(SI0) of IC36

※ When DSP1 waveform test

1ch : L/R clock
2ch : Serial data

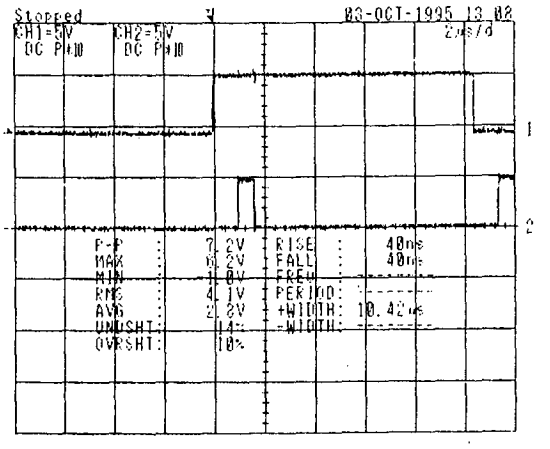

12. DAC - Analog circuit

From 7pin(Lch) of IC18
and 7pin(Rch) of IC19
To Analog circuit

※ When output level test

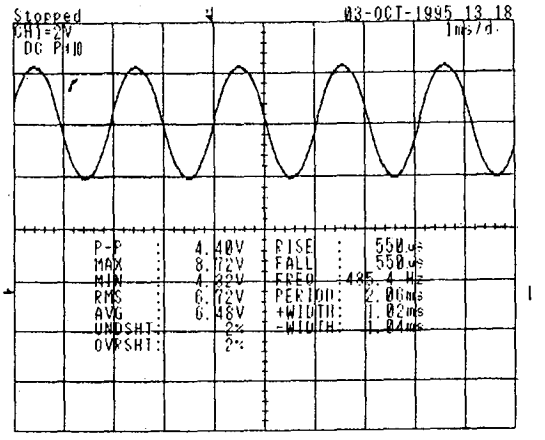

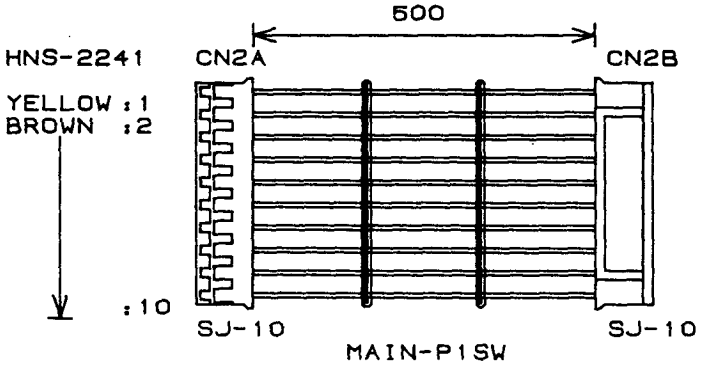

MAIN-P1SW

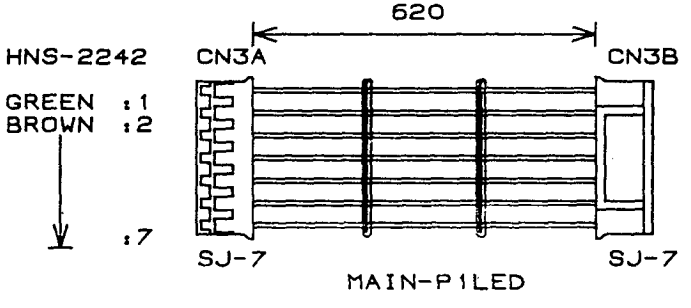

MAIN-P1LED

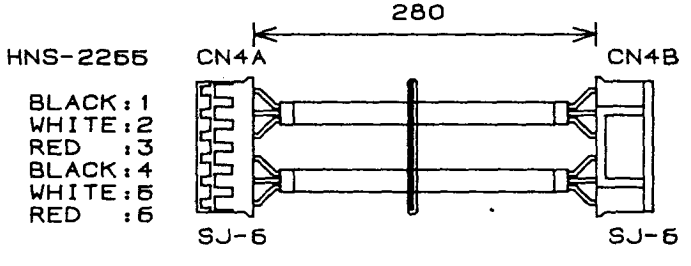

MAIN-P1VOL

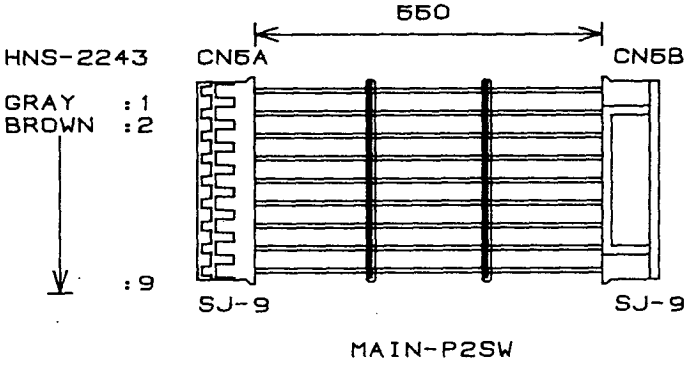

MAIN-P2SW

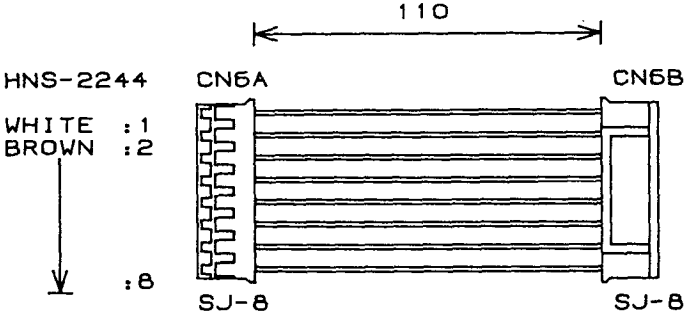

MAIN-P2VR

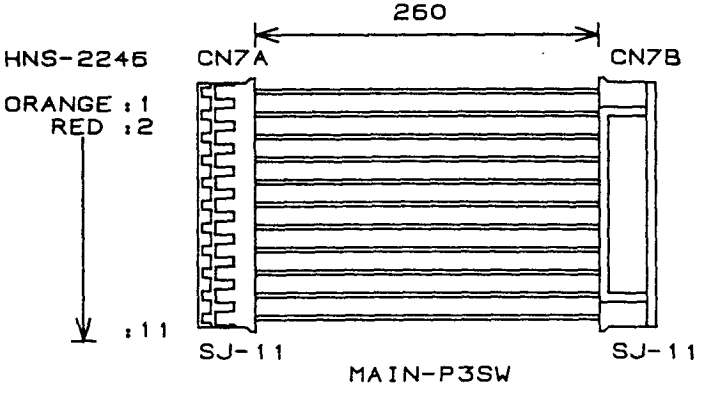

MAIN-P3SW

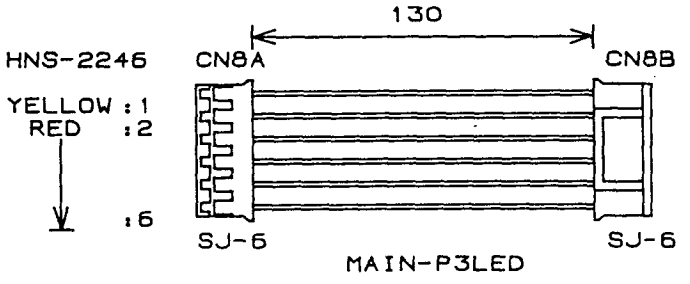
130
HNS-2246
CN8A
CN8B
YELLOW : 1
RED : 2
: 6
SJ-6
SJ-6
MAIN-P3LED

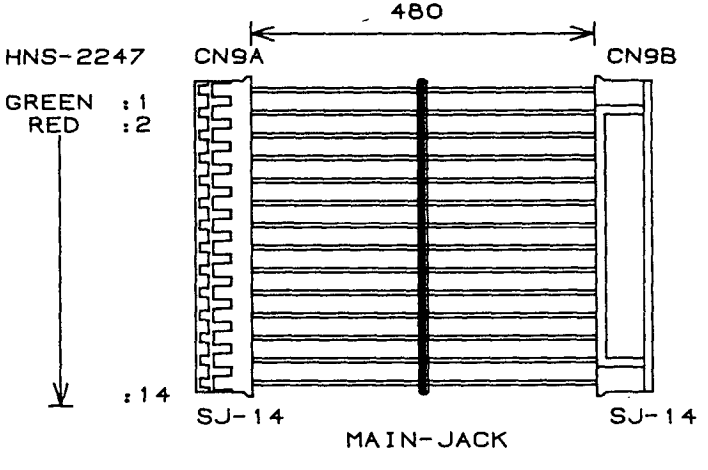
480
HNS-2247
CN9A
CN9B
GREEN : 1
RED : 2
: 14
SJ-14
SJ-14
MAIN-JACK

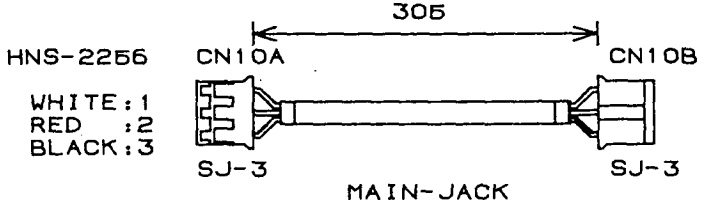
305
HNS-2256
CN10A
CN10B
WHITE : 1
RED : 2
BLACK : 3
SJ-3
SJ-3
MAIN-JACK

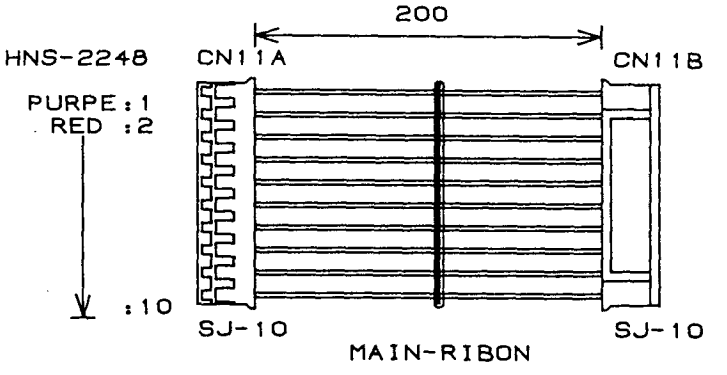
200
HNS-2248
CN11A
CN11B
PURPE : 1
RED : 2
: 10
SJ-10
SJ-10
MAIN-RIBON

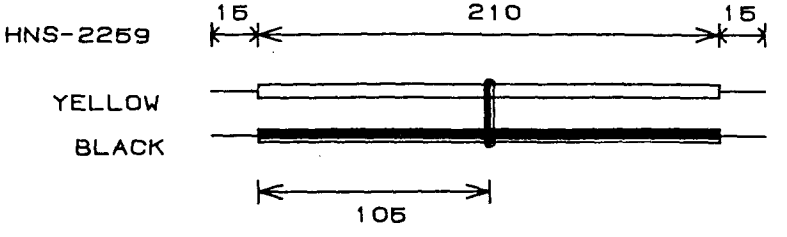
15
210
15
HNS-2259
YELLOW
BLACK
105

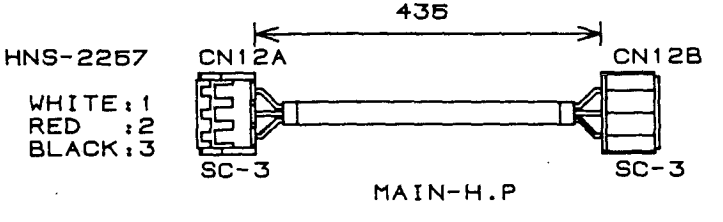
435
HNS-2257
CN12A
CN12B
WHITE : 1
RED : 2
BLACK : 3
SC-3
SC-3
MAIN-H.P

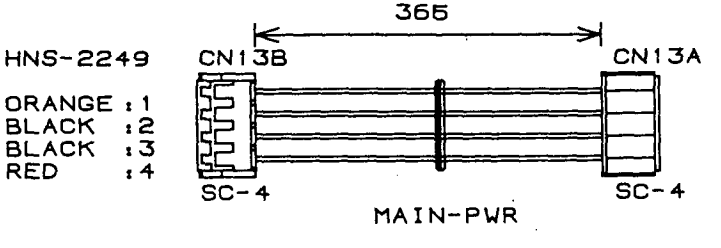
365
HNS-2249
CN13B
CN13A
ORANGE : 1
BLACK : 2
BLACK : 3
RED : 4
SC-4
SC-4
MAIN-PWR

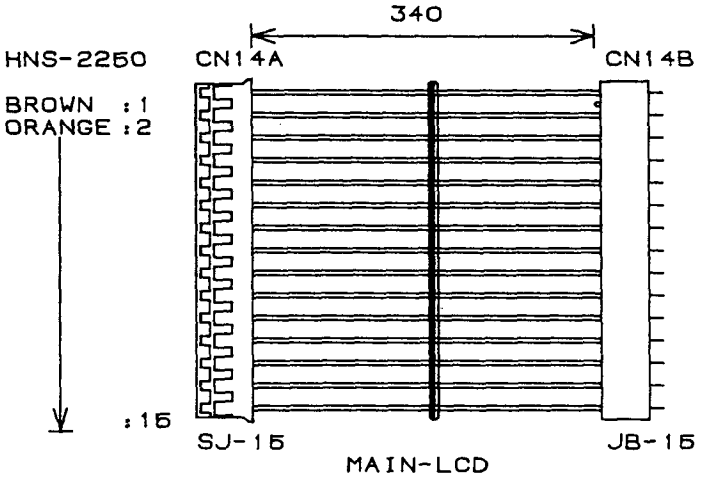
340
HNS-2250
CN14A
CN14B
BROWN :1
ORANGE :2
:15
SJ-15
JB-15
MAIN-LCD

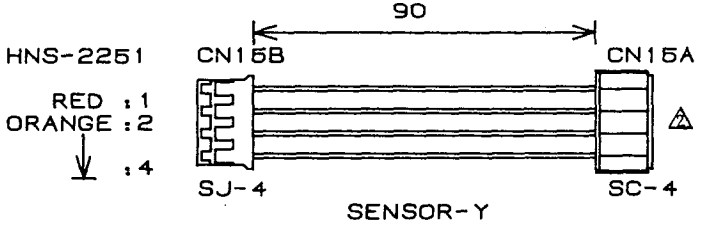
90
HNS-2251
CN15B
CN15A
RED :1
ORANGE :2
:4
SJ-4
SC-4
SENSOR-Y

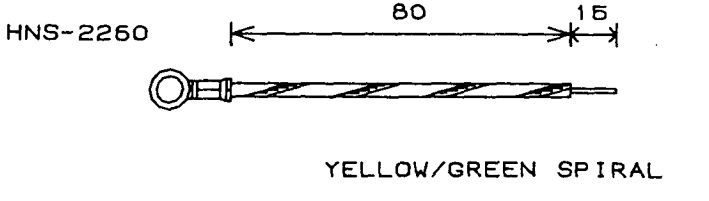
80
15
HNS-2260
YELLOW/GREEN SPIRAL
115404-2

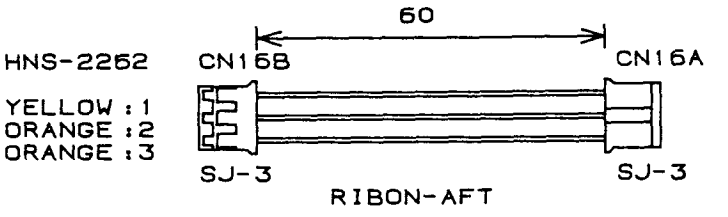
60
HNS-2262
CN16B
CN16A
YELLOW :1
ORANGE :2
ORANGE :3
SJ-3
SJ-3
RIBON-AFT

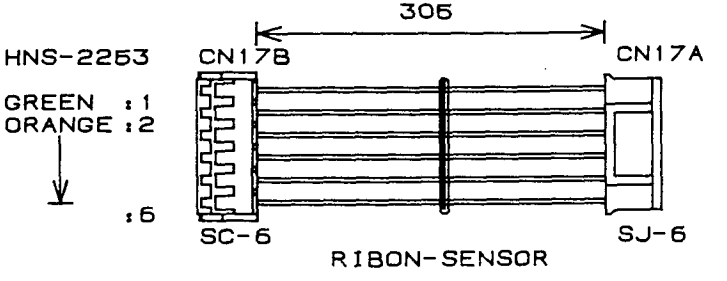
305
HNS-2263
CN17B
CN17A
GREEN :1
ORANGE :2
:6
SC-6
SJ-6
RIBON-SENSOR

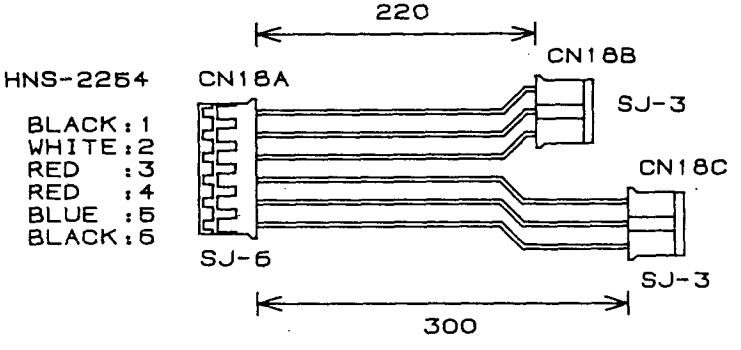
220
HNS-2264
CN18A
CN18B
CN18C
BLACK :1
WHITE :2
RED :3
RED :4
BLUE :5
BLACK :6
SJ-6
SJ-3
SJ-3
300
RIBON-PITCH/MOD

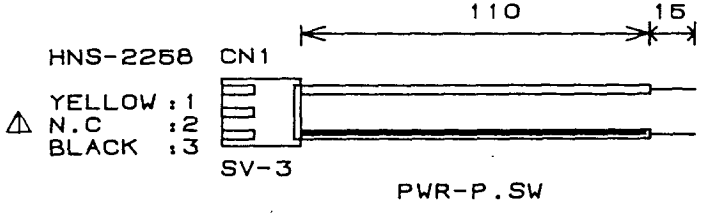
110
15
HNS-2258
CN1
YELLOW :1
N.C :2
BLACK :3
SV-3
PWR-P.SW

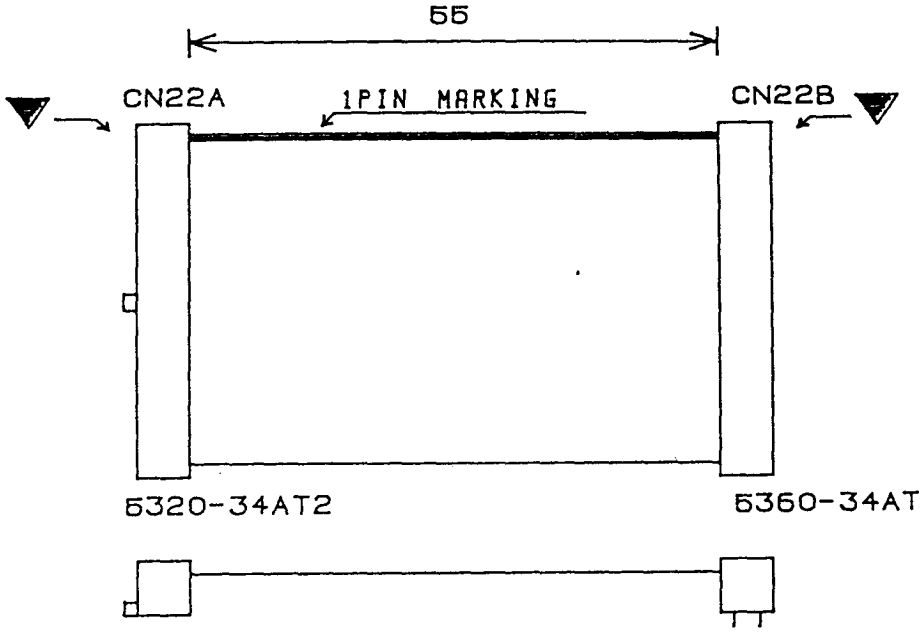

HNS-2263

CABLE	MAKER	FLAT CABLE
	BANDO	BDFX-G-28# UL-2651

	MAKER	CONNECTOR
SOKET	MOLEX	5320-34AT2
	MOLEX	5360-34AT

HNS-2264

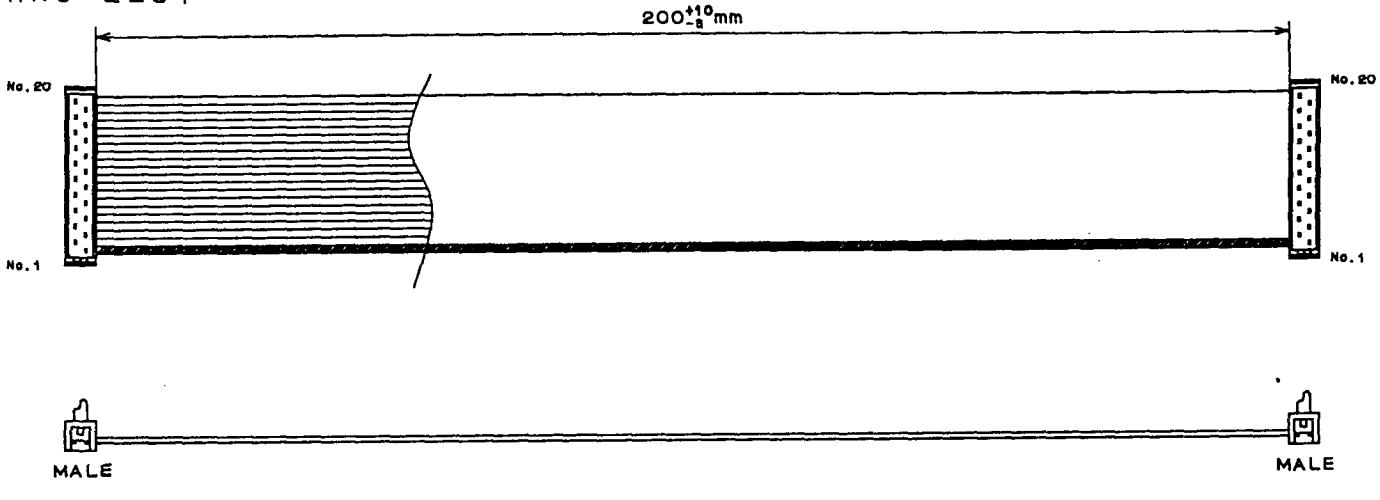

※MALE ASSEMBLY
(AMP Micro Match)

Pin	Part Numbers
20	2-215083-0

※WIRE:1.27 PITCH FLAT CABLE

AWG28
Certified UL

9. PARTS LIST

PART CODE	PART NAME/SPECIFICATION	P.C.BOARD	NOTE	Q'TY	MARK
001184600	PCB ASSEMBLY KLM-1846	M.PART	MAIN	1	NEW
001184700	PCB ASSEMBLY KLM-1847/49	M.PART	PANEL L,R	1	NEW
001184800	PCB ASSEMBLY KLM-1848	M.PART	PANEL C	1	NEW
001185000	PCB ASSEMBLY KLM-1850/51	M.PART	JACK, HP	1	NEW
001186200	PCB ASSEMBLY KLM-1862	M.PART	CARD	1	NEW
001186300	PCB ASSEMBLY KLM-1863	M.PART	SENSOR	1	NEW
001186400	PCB ASSEMBLY KLM-1864	M.PART	AFTERTOUCH	1	NEW
001187100	PCB ASSEMBLY KLM-1871	M.PART	PITCH-MOD	1	NEW
001187900	PCB ASSEMBLY KLM-1879	M.PART	Y-SENSOR	1	NEW
001188000	PCB ASSEMBLY KLM-1880	M.PART	RIBBON	1	NEW
002185600	POWER SUPPLY UNIT KLM-1856	M.PART		1	NEW
312009500	LED HLMP-D101 (YHP)	1847		12	
		1848		1	
		1849		6	
312010700	LED GL3HD43	1847		4	
		1849		7	
313003000	LCD DMC2079NY-LY	M.PART		1	
320001316	IC UPD65612GF-015-3BE	1846	CBR92	1	
320001529	IC UPD70433GD-16-5BB	1846	CPU	1	NEW
320004565	IC HD6413003RF16	1846	CPU	1	
320021144	IC TMS57002BPHA	1846	DSP	3	
320021146	IC TMS27C240-10JL	1846	EP_ROM	1	NEW
320021149	IC TMS27C210A-10JL	1846	EP_ROM	1	NEW
324001006	IC UPD74HCU04GS-E2 (SOP)	1846	HC_MOS	1	
324001022	IC UPD74HC4040GS-E2	1846	HC_MOS	1	
324001066	IC UPD431000AGW-70L-E2	1846	S_RAM	3	
324004003	IC HD74HC139FPER	1846	HC_MOS	1	
324004006	IC HD74HC00FPER	1846	HC_MOS	1	
324004007	IC HD74HC573FPER	1846	HC_MOS	2	
324004024	IC HD74HC74FPER	1846	HC_MOS	1	
324004050	IC HD74HC138FPER	1846	HC_MOS	2	
324004065	IC HD74HC164FPER	1846	HC_MOS	1	
324004167	IC HD74HC4052FPER	1846	HC_MOS	2	NEW
324004176	IC HD74HC05FPER	1850	HC_MOS	1	
324009004	IC NJM78L05UA-TE2	1846	REGULATER	1	
324009019	IC NJM2115M-TE2	1846	OP_AMP	3	
		1864	OP_AMP	1	
		1880	OP_AMP	2	
324009022	IC NJM78L12UA-TE1	1846	REGULATER	1	NEW
324011002	IC M5223FP-600C (8P SOP)	1846	OP_AMP	1	
324011004	IC M5216FP-600C-TP3	1846	OP_AMP	1	
324011013	IC M62021FP-600C	1846	RESET	1	
324011025	IC M66311FP	1847	LED DRIVER	1	NEW
		1849		1	
324013016	IC LH64256BK-80	1846	S_RAM	4	
324038002	IC TDA1305T/N1-T	1846	DAC	1	
330001400	PHOTO COUPLER PC-910K	1850		1	
335006500	CRYSTAL OSC. AT-49 24.576MHZ	1846		1	
335006600	CRYSTAL OSC. AT-49 32MHZ	1846		1	

PART CODE	PART NAME/SPECIFICATION	P.C.BOARD	NOTE	Q'TY	MARK
350002233	SEMI FIXED VR RH0615C N3 3.3K	1864		1	
		1880		1	
350002310	SEMI FIXED VR RH0615C 14 10K	1880		1	
350002410	SEMI FIXED VR RH0615C 15 100K	1880		1	
350002447	SEMI FIXED VR RH0615C S5 470K	1864		1	
360024100	VR RK1631110TDAA	1871		2	
360024400	VR RK11K1130AE4A 10KB	1848		5	NEW
		1849		1	
360024500	VR RK11K1140ADWA 10KB	1879		1	NEW
362007500	VR RK09K1110BJFA 10KB	1850		1	NEW
362007800	VR RK14K1230A35A 10KBX2	1849		1	NEW
375010500	TOUCH SW EVQ-PAC09K-A	1847		24	
		1848		8	
		1849		8	
375012500	POWER SW SDDF3-1A-2	M.PART		1	NEW
415002700	X-495 X-Z SENSOR	M.PART		1	NEW
420005400	37NOTE TP/9SYNTH+UNWEIGHT+AFTH	M.PART		1	NEW
450003000	MINI PHONE JACK LGY-6502-0600	1850		1	
454004300	PHONE JACK YKB21-5012	1850		2	
454004400	PHONE JACK YKB21-5010	1850		1	
454009900	PHONE JACK YKB21-5074G	1850		1	
464012004	FUSE 250V A1 SB-1	M.PART	117US	1	NEW
		M.PART	117CN	1	
		M.PART	117EX	1	
		M.PART	100JP	1	
464062001	FUSE 250V T1.0A	M.PART	220GE	1	
		M.PART	220SE	1	
		M.PART	240GE	1	
		M.PART	240AU	1	
		M.PART	240AF	1	
		M.PART	220WG	1	
		M.PART	220SC	1	
		M.PART	220FR	1	
		M.PART	240UK	1	
480001403	IC SOCKET 40P DICF-40CS-E	1846		2	
480010380	DIN JACK YKF51-5041 (3P)	1850		1	
520001700	LITHIUM BATTERY CR2032VPX	1846		1	
525000100	DATA LINE FILTER ESD-R-25D-B	M.PART		1	
540020200	INLET SOCKET SS-7B	M.PART		1	
600005100	AC CORD KP-610 GTBS-3 KS-31AY	M.PART	230UK	1	
600005300	AC CORD DC-480-J01	M.PART	100JP	1	
600005400	AC CORD EC-652-E03	M.PART	230GE	1	
		M.PART	230FR	1	

PART CODE	PART NAME/SPECIFICATION	P.C.BOARD	NOTE	Q'TY	MARK
600005400	AC CORD EC-652-E03	M.PART	230WG	1	
		M.PART	230SC	1	
600005500	AC CORD UC-948-J01	M.PART	117EX	1	
600005700	AC CORD UC-953-J01	M.PART	117US	1	
		M.PART	117CN	1	
600005800	AC CORD SC-111-J01	M.PART	240AU	1	
620018901	ROUND KNOB NO.1 GS H40044	M.PART		10	
620024600	X-952 POWER SW KNOB E40304-2	M.PART		1	
620027200	X-495 VR KNOB KOC-E40401	M.PART		7	NEW
630021900	X-495 LCD WINDOW KOC-E30204	M.PART		1	NEW
630022700	X-495 ISOLATION PLATE E40418	M.PART		1	NEW
630022800	X-495 JACK SHIELD KOC-C41026	M.PART		1	NEW
630022900	X-495 SHIELD SHEET (1) C20309	M.PART		1	NEW
630023000	X-495 SHIELD SHEET (2) C20310	M.PART		1	NEW
641041172	X-323 JACK PLATE 2 KOC-C40693	1850		1	
641041248	X-495 LOWER CASE KOC-C20307	M.PART		1	NEW
641041249	X-495 EMI BOX KOC-C10168	M.PART		1	NEW
641041250	X-495 PJ ANGLE KOC-C41006	M.PART		1	NEW
641041251	X-495 WHEEL METAL FITTING ASSY	M.PART		1	NEW
641041252	X-495 CP SUPPORT KOC-C41008	M.PART		1	NEW
641041253	X-495 POWER SW METAL FITTING	M.PART		1	NEW
641041255	X-495 CENTER SUPPORT PLATE	M.PART		1	NEW
644003900	GND SPRING(D) KOC-C40	M.PART		3	
644006200	X-011/012 WHEEL SPRING	M.PART		2	
644007300	X-410 WHEEL SPRING C40689-2	M.PART		1	
646039100	X-011/012 WHEEL SUPPORT	M.PART		1	
646039400	X-011/012 CARD GUIDE	M.PART		1	
646053400	X-495 UPPER CASE KOC-E10122	M.PART		1	NEW
646053600	X-495 SENSOR WHEEL KOC-E30203	M.PART		1	NEW
646053700	X-495 WHEEL SUPPORT 2 E40339	M.PART		1	NEW
646054500	X-495 WHEEL KOC-E30094-6	M.PART		2	NEW
649007400	BATTERY HOLDER	1846		1	

VAROITUS

Paristo voi räjähtää, jos se on virheellisesti asennettu.
Vaihda paristo ainoastaan laitevalmistajan suosittelemaan tyyppiin. Hävitä käytetty paristo valmistajan ohjeiden mukaisesti.

ADVARSEL!

Lithiumbatteri – Eksplosionsfare ved fejlagtig handtering.
Udskiftning må kun ske med batteri af samme fabrikat og type.
Levér det brugte batteri tilbage til leverand ø ren.

ADVERSEL

Lithiumbatteri – Eksplosjonsfare.
Ved utskifting benyttes kun batteri som
anbefalt av apparatfabrikanten.
Brukt batteri returneres apparatleverand ø ren.

VARNING

Explosionsfara vid felaktigt batteribyte.
Använd samma batterityp eller en ekvivalent typ som rekommenderas av apparattillverkaren.
Kassera använt batteri enligt fabrikantens instruktion.

CAUTION

Danger of explosion if battery is incorrectly replaced . Replace only with . the same or equivalent type recommended by the equipment manufacturer
Discard used' batteries according to manufacturer 's instructions.

KORG

KORG INC. 15-12, Shimotakaido 1-chome, Suginami-ku, Tokyo 168

© KORG INC. 1995

0711 CEH PRINTED IN JAPAN ©