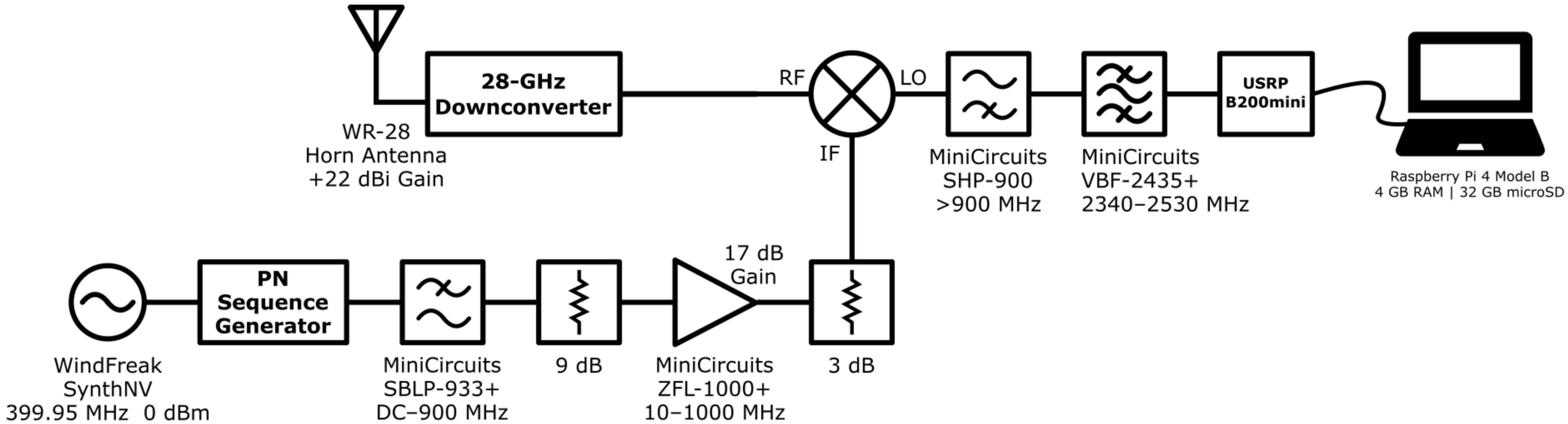
28-GHz
Downconverter
WR-28
Horn Antenna
+22 dBi Gain
RF
LO
IF
MiniCircuits
SHP-900
>900 MHz
MiniCircuits
VBF-2435+
2340–2530 MHz
USRP
B200mini
Raspberry Pi 4 Model B
4 GB RAM | 32 GB microSD
PN
Sequence
Generator
WindFreak
SynthNV
399.95 MHz 0 dBm
MiniCircuits
SBLP-933+
DC–900 MHz
9 dB
17 dB
Gain
MiniCircuits
ZFL-1000+
10–1000 MHz
3 dB

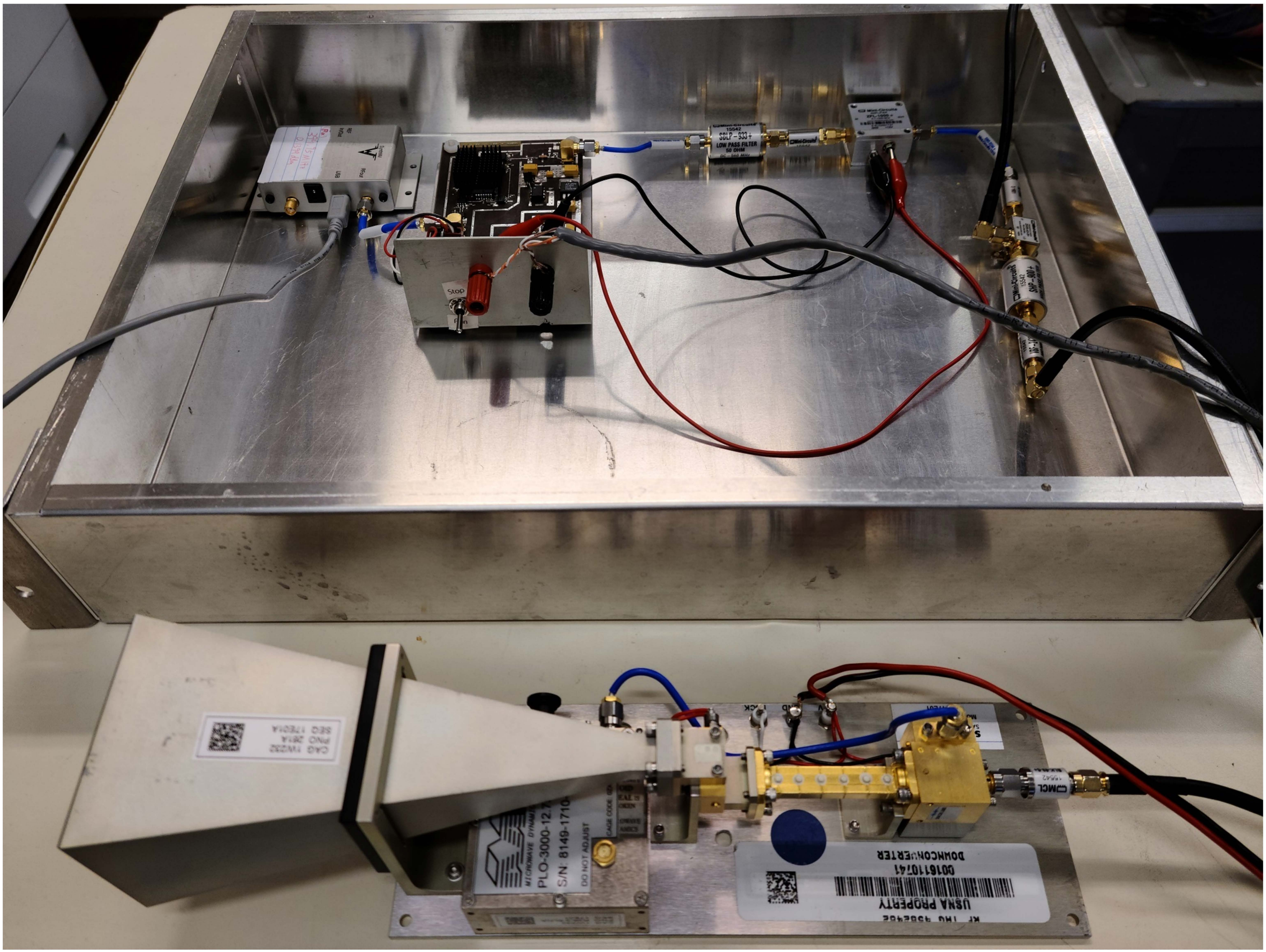
SBLP-933+
LOW PASS FILTER
50 OHM
Stop